PROJECT NO: C00057
BID NO: 27-31
KHA NO. 063543044

THE TOWN OF ADDISON

CONSTRUCTION PLANS FOR

ADDISON JUNCTION
PUBLIC INFRASTRUCTURE IMPROVEMENTS

PACKAGE 1

LOCATION MAP:

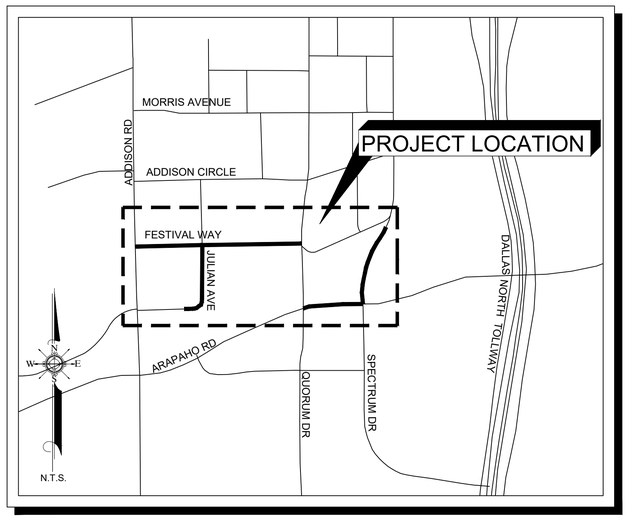

PROJECT NO: C00057
BID NO: 27-31

TOWN OF ADDISON

Addison Services Center
16801 Westgrove Drive
Addison, TX 75001
Ph. 972-450-2871

FINAL SUBMITTAL
NOVEMBER 2026

CITY OFFICIALS:

Mayor:	Bruce Arfsten
Mayor Pro Tem:	Chris DeFrancisco
Deputy Mayor Pro Tem:	Darren Gardner
City Council:	Schnell Blanton Dan Liscio Randy Smith Marlin Willesen
City Manager:	David Gaines
Director of Public Works and Engineering Services:	Rebecca Diviney, P.E.
Capital Improvement Project Manager:	Abdulbasit Abbasi

11/06/2026
STATE OF TEXAS
L. NATHAN ANTE
96666
LICENSED
ENGINEER

811 Know what's below. Call before you dig.

Kimley»Horn
225 E. John W. Carpenter Freeway, Suite 1100, Irving, TX 75062
(214) 420-5600
Texas Registered Engineering Firm # F-928

SHEET NUMBER
1

Plotted By: Mcmorris, Joseph November 06, 2026 01:39:24pm C:\ACCLACCDocs\Vistra-Irion\063543066-ADDISON JUNCTION PUBLIC\Project Files\CADD\Sheets\SHEET INDEX.dwg
This document, together with the concepts and designs presented herein, as an instrument of service, is intended only for the specific purpose and client for which it was prepared. Reuse of and improper reliance on this document without written authorization and adaptation by Kimley-Horn and Associates, Inc. shall be without liability to Kimley-Horn and Associates, Inc.

INTRO SHEETS

SHEET NUMBER	SHEET TITLE
1	COVER SHEET
2	SHEET INDEX
3 - 4	GENERAL NOTES (2 SHEETS)

PROJECT CONTROL

SHEET NUMBER	SHEET TITLE
5	PROJECT CONTROL - SHEET 1 OF 2
6	PROJECT CONTROL - SHEET 2 OF 2

EXISTING UTILITIES

SHEET NUMBER	SHEET TITLE
7-16	EXISTING UTILITIES (10 SHEETS)

REMOVALS

SHEET NUMBER	SHEET TITLE
17	REMOVALS - FESTIVAL WAY - BEGIN TO STA 9+00
18	REMOVALS - FESTIVAL WAY - STA 9+00 TO END
19	REMOVALS - JULIAN AVENUE - BEGIN TO END
20	REMOVALS - ACE ALLEY - BEGIN TO END
21	REMOVALS - ARAPAHO ROAD - BEGIN TO END
22	REMOVALS - TREE TABLE

TYPICAL SECTIONS

SHEET NUMBER	SHEET TITLE
23	TYPICAL SECTIONS - EXISTING
24	TYPICAL SECTIONS - PROPOSED

CONSTRUCTION PHASING

SHEET NUMBER	SHEET TITLE
25	TRAFFIC CONTROL NARRATIVE
26	CONSTRUCTION PHASING - SHEET 1 OF 2
27	CONSTRUCTION PHASING - SHEET 2 OF 2
28 - 39	TXDOT DETAILS - BC-21 (12 SHEETS)
40	TXDOT DETAILS - TCP(2-1)-18
41	TXDOT DETAILS - TCP(2-5)-18
42	TXDOT DETAILS - WZ(BRK)-13
43	TXDOT DETAILS - WZ(RCD)-26
44	TXDOT DETAILS - WZ(TD)-17

PAVING

SHEET NUMBER	SHEET TITLE
45	PAVING - FESTIVAL WAY - BEGIN TO STA 5+00
46	PAVING - FESTIVAL WAY - STA 5+00 TO STA 9+00
47	PAVING - FESTIVAL WAY - STA 9+00 TO END
48	PAVING - JULIAN AVENUE - BEGIN TO STA 104+00
49	PAVING - JULIAN AVENUE - STA 104+00 TO END
50	PAVING - ACE ALLEY - BEGIN TO END
51	PAVING - ARAPAHO ROAD - BEGIN TO END
52 - 54	TOWN DETAILS - (3 SHEETS)
55 - 56	TXDOT DETAILS - RL-PR11-19 - (2 SHEETS)

DRAINAGE

SHEET NUMBER	SHEET TITLE
57	DRAINAGE - PROPOSED DRAINAGE AREA MAP
58	DRAINAGE - DRAINAGE CALCULATIONS
59	DRAINAGE - SYSTEM A - PLAN & PROFILE - END TO STA 6+00
60	DRAINAGE - SYSTEM A - PLAN & PROFILE - STA 6+00 TO STA 3+00
61	DRAINAGE - SYSTEM A - PLAN & PROFILE - STA 3+00 TO BEGIN
62	DRAINAGE - SYSTEM A - LATERALS
63	DRAINAGE - SYSTEM A - LATERALS
64	DRAINAGE - SYSTEM B - PLAN & PROFILE - BEGIN TO STA 4+00
65	DRAINAGE - SYSTEM B - PLAN & PROFILE - STA 4+00 TO END
66	DRAINAGE - SYSTEM B - PLAN & PROFILE - BEGIN TO END
67	DRAINAGE - SYSTEM B - LATERALS
68	DRAINAGE - SYSTEM C - PLAN & PROFILE - BEGIN TO END
69	DRAINAGE - SYSTEM D - PLAN & PROFILE - BEGIN TO END
70 - 71	TOWN DETAILS - (2 SHEETS)

WATER

SHEET NUMBER	SHEET TITLE
72	WATER - OVERALL WATER LINE MAP
73	WATER - WATER LINE 1 - BEGIN TO STA 5+00
74	WATER - WATER LINE 1 - STA 5+00 TO STA 9+00
75	WATER - WATER LINE 1 - STA 9+00 TO END
76	WATER - WATER LINE 2 - BEGIN TO STA 4+00
77	WATER - WATER LINE 2 - STA 4+00 TO END
78	WATER - PROPOSED WATER STUBS
79 - 81	TOWN DETAILS (3 SHEETS)

WASTEWATER

SHEET NUMBER	SHEET TITLE
82	WASTEWATER - OVERALL WASTEWATER MAP
83	WASTEWATER - WASTEWATER LINE A1 - BEGIN TO END
84	WASTEWATER - WASTEWATER LINE A2 - BEGIN TO END
85	WASTEWATER - WASTEWATER LINE B - BEGIN TO STA 4+50
86	WASTEWATER - WASTEWATER LINE B - STA 4+50 TO STA 8+00
87	WASTEWATER - WASTEWATER LINE B - STA 8+00 TO END
88	WASTEWATER - WASTEWATER LINE C - BEGIN TO END
89	WASTEWATER - WASTEWATER LINE D - BEGIN TO 5+00
90	WASTEWATER - WASTEWATER LINE D - STA 5+00 TO END
91 - 92	TOWN DETAILS (2 SHEETS)

PAVEMENT MARKING AND SIGNING

SHEET NUMBER	SHEET TITLE
93	PAVEMENT MARKING AND SIGNING - FESTIVAL WAY - BEGIN TO STA 9+00
94	PAVEMENT MARKING AND SIGNING - FESTIVAL WAY & ACE ALLEY - STA 9+00 TO END
95	PAVEMENT MARKING AND SIGNING - ARAPAHO ROAD - BEGIN TO END
96	TOWN DETAILS - (1 SHEET)

ILLUMINATION AND FIBER

SHEET NUMBER	SHEET TITLE
97	ILLUMINATION AND FIBER - FESTIVAL WAY - BEGIN TO STA 9+00
98	ILLUMINATION AND FIBER - FESTIVAL WAY & JULIAN AVENUE - STA 9+00 TO END
99	ILLUMINATION AND FIBER - TABLES
100	TOWN DETAILS - (1 SHEET)
101 - 104	TXDOT DETAILS - ED(1,2,3,4)-25 (4 SHEETS)
105	TXDOT DETAILS - RID(2)-20

EROSION CONTROL

SHEET NUMBER	SHEET TITLE
106	EROSION CONTROL - PLAN - BEGIN TO END
107	TOWN DETAILS - (1 SHEET)
108	TXDOT DETAILS - EC(1)-16
109 - 111	TXDOT DETAILS - EC(9)-16 (3 SHEETS)

CROSS SECTIONS

SHEET NUMBER	SHEET TITLE
112	CROSS SECTIONS - FESTIVAL WAY - STA 1+50 TO STA 5+50
113	CROSS SECTIONS - FESTIVAL WAY - STA 5+66 TO STA 9+50
114	CROSS SECTIONS - FESTIVAL WAY - STA 10+00 TO 12+50
115	CROSS SECTIONS - JULIAN AVENUE - STA 100+50 TO STA 104+50
116	CROSS SECTIONS - JULIAN AVENUE - STA 105+00 TO STA 105+50
117	CROSS SECTIONS - ACE ALLEY - STA 300+00 TO STA 304+00

No.	REVISIONS	DATE	BY

PROJECT NO. C000057/ BID NO. 27-31

Kimley»Horn
225 E.JOHN W. CARPENTER FREEWAY SUITE 1100
IRVING, TX 75062
PHONE: 214-369-2300
WWW.KIMLEY-HORN.COM
© 2026 KIMLEY-HORN AND ASSOCIATES, INC.
TEXAS REGISTERED ENGINEERING FIRM #F-928

11/06/2026

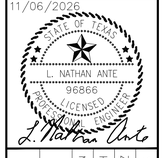

KHA PROJECT 063543066	DATE 11/06/2026	SCALE AS SHOWN	DESIGNED BY KCH
		DRAWN BY ZMZ	CHECKED BY FLS

ADDISON
ADDISON JUNCTION PUBLIC INFRASTRUCTURE IMPROVEMENTS

SHEET INDEX

SHEET NUMBER
2

1. GENERAL NOTES FOR ALL CONSTRUCTION ACTIVITIES

1.1. ALL CONSTRUCTION, TESTING, AND MATERIALS SHALL BE IN ACCORDANCE WITH THE TOWN'S CURRENT STANDARDS, DETAILS, AND SPECIFICATIONS. IF NOT EXPLICITLY SPECIFIED IN TOWN DOCUMENTS, NCTCOG OR THE APPROPRIATE GOVERNING BODY'S, STANDARDS AND DETAILS SHALL REGULATE CONSTRUCTION, TESTING, AND MATERIALS.

1.2. CONTRACTOR IS RESPONSIBLE FOR OBTAINING ALL NECESSARY PERMITS AND APPROVALS PRIOR TO BEGINNING ANY CONSTRUCTION. CONTACT PUBLIC WORKS & ENGINEERING SERVICES DEPARTMENT FOR A PERMIT TO WORK WITHIN TOWN ROW.

1.3. ALL SHOP DRAWINGS, WORKING DRAWINGS OR OTHER DOCUMENTS WHICH REQUIRE REVIEW BY THE TOWN, SHALL BE SUBMITTED BY THE CONTRACTOR SUFFICIENTLY IN ADVANCE OF SCHEDULED CONSTRUCTION TO ALLOW NO LESS THAN 21 CALENDAR DAYS FOR REVIEW AND RESPONSE BY THE TOWN.

1.4. CONTRACTOR SHALL PROVIDE TREE PROTECTION PER TOWN OF ADDISON LANDSCAPE STANDARDS PRIOR TO BEGINNING CONSTRUCTION.

1.5. CONTRACTOR SHALL NOTIFY THE TOWN AT LEAST 48 HOURS PRIOR TO BEGINNING CONSTRUCTION.

1.6. CONTRACTORS ARE ALLOWED TO MAKE CONNECTIONS TO THE TOWN WATER SYSTEM BY OPENING AN ACCOUNT THROUGH THE ADDISON FINANCE DEPARTMENT AND RENTING A FIRE HYDRANT METER. THE COMPANY OR INDIVIDUAL IS SOLELY RESPONSIBLE FOR THE COST, MAINTENANCE, PROPER USE, AND SECURITY OF THE RENTAL EQUIPMENT. THE COMPANY OR INDIVIDUAL IS ALSO RESPONSIBLE FOR THE COST OF THE WATER USED.

1.7. CONTRACTOR MUST KEEP AVAILABLE ONSITE, AT ALL TIMES, APPROVED CONSTRUCTION PLANS AND COPIES OF ANY/ALL REQUIRED PERMITS ALONG WITH THE APPROPRIATE VERSIONS OF THE FOLLOWING APPLICABLE REFERENCES:
- 1.7.1. TOWN OF ADDISON ENGINEERING STANDARDS & DETAILS
- 1.7.2. NCTCOG STANDARDS & SPECIFICATIONS
- 1.7.3. TCEQ STANDARDS & SPECIFICATIONS
- 1.7.4. TXDOT SPECIFICATIONS & STANDARD DRAWINGS, AS APPLICABLE.

1.8. CONTRACTOR SHALL BE RESPONSIBLE FOR ALL REQUIRED CONSTRUCTION SURVEYING AND STAKING AND SHALL NOTIFY THE DESIGN ENGINEER OF ANY DISCREPANCIES PRIOR TO PROCEEDING WITH ANY WORK.

1.9. CONTRACTOR SHALL BE RESPONSIBLE FOR PROTECTING ALL SURVEY MARKERS INCLUDING IRON RODS, PROPERTY CORNERS, OR SURVEY MONUMENTS WITHIN THE LIMITS OF CONSTRUCTION AND OUTSIDE ROW DURING CONSTRUCTION. ANY SURVEY MARKERS DISTURBED DURING CONSTRUCTION SHALL BE REPLACED BY THE CONTRACTOR AT NO COST TO THE TOWN.

1.10. TESTING AND INSPECTION OF MATERIALS SHALL BE PERFORMED BY A COMMERCIAL TESTING LABORATORY SPECIFIED BY OR APPROVED BY THE TOWN.

CONTRACTOR SHALL FURNISH MATERIALS OR SPECIMENS FOR TESTING AND SHALL FURNISH SUITABLE EVIDENCE THAT THE MATERIALS PROPOSED TO BE INCORPORATED INTO THE WORK ARE IN ACCORDANCE WITH THE SPECIFICATIONS. COPIES OF TESTING REPORTS SHALL BE FURNISHED TO THE TOWN IMMEDIATELY UPON RECEIPT BY THE CONTRACTOR.

1.11. FOR PUBLIC PROJECTS, CONTRACTOR SHALL PROVIDE A CONSTRUCTION SCHEDULE AND WEEKLY PROGRESS REPORTS.

1.12. CONTRACTOR IS RESPONSIBLE FOR KEEPING STREETS AND DRIVEWAYS ADJACENT TO THE PROJECT FREE OF DIRT, MUD, AND DEBRIS AT ALL TIMES. CONTRACTOR SHALL CLEAN UP AND REMOVE ALL LOOSE MATERIAL RESULTING FROM CONSTRUCTION OPERATIONS. THE CONTRACTOR SHALL TAKE ALL AVAILABLE PRECAUTIONS TO CONTROL DUST.

1.13. THE EXISTENCE AND LOCATIONS OF THE PUBLIC AND FRANCHISE UTILITIES SHOWN ON THE DRAWINGS WERE OBTAINED FROM AVAILABLE RECORDS AND ARE APPROXIMATE. THE CONTRACTOR SHALL DETERMINE THE DEPTH AND LOCATION OF EXISTING UNDERGROUND UTILITIES PRIOR TO EXCAVATING, TRENCHING, OR DRILLING AND SHALL BE REQUIRED TO TAKE ANY PRECAUTIONARY MEASURES TO PROTECT ALL LINES SHOWN AND / OR ANY OTHER UNDERGROUND UTILITIES NOT OF RECORD OR NOT SHOWN ON THE PLANS. THE CONTRACTOR SHALL BE RESPONSIBLE FOR CONTACTING ALL PUBLIC AGENCIES AND FRANCHISE UTILITIES 48 HOURS PRIOR TO CONSTRUCTION. THE CONTRACTOR MAY BE REQUIRED EXPOSE THESE FACILITIES AT NO COST TO THE TOWN. THE CONTRACTOR WILL BE RESPONSIBLE FOR DAMAGES TO UTILITIES IF THE DAMAGE IS CAUSED BY NEGLIGENCE OR FAILURE TO HAVE LOCATES PERFORMED.

1.14. CONTRACTOR SHALL BE RESPONSIBLE FOR ANY DAMAGE TO EXISTING FACILITIES OR ADJACENT PROPERTIES DURING CONSTRUCTION. ANY REMOVAL OR DAMAGE TO EXISTING FACILITIES SHALL BE REPLACED OR REPAIRED TO EQUAL OR BETTER CONDITION BY THE CONTRACTOR.

1.15. CONTRACTOR SHALL NOT STORE MATERIALS, EQUIPMENT OR OTHER CONSTRUCTION ITEMS ON ADJACENT PROPERTIES OR RIGHT-OF-WAY WITHOUT THE PRIOR WRITTEN CONSENT OF THE PROPERTY OWNER AND/OR THE TOWN, AS APPLICABLE.

1.16. TEMPORARY FENCING SHALL BE INSTALLED PRIOR TO THE REMOVAL OF EXISTING FENCING. TEMPORARY FENCING SHALL BE REMOVED AFTER PROPOSED FENCING IS APPROVED BY THE TOWN. ALL TEMPORARY AND PROPOSED FENCING LOCATIONS SHALL BE SUBJECT TO FIELD REVISIONS AS DIRECTED BY THE TOWN.

1.17. UNUSABLE EXCAVATED MATERIAL, OR CONSTRUCTION DEBRIS SHALL BE IMMEDIATELY REMOVED AND DISPOSED OF OFFSITE AT AN APPROVED DISPOSAL FACILITY BY THE CONTRACTOR AT HIS EXPENSE.

1.18. IT IS THE CONTRACTOR'S RESPONSIBILITY TO MAINTAIN A NEAT AND ACCURATE RECORD OF CONSTRUCTION FOR THE TOWN'S RECORDS.

2. GENERAL NOTES FOR PAVING SYSTEMS

2.1. ALL PAVING CONSTRUCTION, TESTING, AND MATERIALS, INCLUDING CONCRETE, REINFORCEMENT, JOINTING, AND SUBGRADE PREPARATION AND TREATMENT SHALL BE IN ACCORDANCE WITH THE TOWN'S CURRENT STANDARDS, DETAILS, AND CONSTRUCTION SPECIFICATIONS UNLESS OTHERWISE NOTED.

2.2. NO EARTHWORK, LIME APPLICATION, OR OTHER PREPARATION OF THE SUBGRADE FOR PAVING OF STREETS, ALLEYS, OR FIRE LANES SHALL BE INITIATED WITHOUT AUTHORIZATION FROM THE TOWN. THE TOWN WILL AUTHORIZE THE SUBGRADE ENGINEERING STANDARDS WORK IN PREPARATION FOR PAVING AFTER UTILITY TRENCH BACKFILL TESTING HAS BEEN COMPLETED AND VERIFIED TO MEET THE TOWN REQUIREMENTS.

2.3. SUBGRADE
- 2.3.1. SHALL EXTEND 12" MIN. BEHIND THE BACK OF CURB.
- 2.3.2. SUBGRADE UNDER ALL PAVEMENT SHALL BE 6" THICK AND SHALL BE STABILIZED WITH AT LEAST 30 LBS. PER SQ. YD. HYDRATED LIME, COMPACTED TO A DENSITY NOT LESS THAN 95 PERCENT.
- 2.3.3. LABORATORY TESTS MUST BE SUBMITTED TO THE PUBLIC WORKS DEPARTMENT FOR APPROVAL TO DETERMINE AMOUNT OF LIME REQUIRED. LABORATORY TEST MAY BE WAIVED PROVIDED AT LEAST 36 LBS. OF LIME PER SQ. YD. IS USED. SEE NCTCOG ITEM 301.2 "LIME TREATMENT".
- 2.3.4. FLEXIBLE BASE (CRUSHED STONE/CONCRETE) PER NCTCOG ITEM 301.5 MAY BE SUBSTITUTED FOR LIME TREATMENT WITH THE APPROVAL OF THE TOWN ENGINEER.

2.4. REINFORCING STEEL
- 2.4.1. BAR LAPS SHALL BE THIRTY DIAMETERS.
- 2.4.2. REINFORCING STEEL SHALL BE #3 REBAR (3/8") ON 18" CENTERS FOR 8" OR LESS PAVEMENT THICKNESS, #4 FOR 10" OR MORE PAVEMENT THICKNESS.
- 2.4.3. REBAR SHALL BE SUPPORTED BY BAR CHAIRS OR OTHER DEVICES APPROVED BY TOWN ENGINEER.
- 2.4.4. NO TRAFFIC ON FINISHED SUBGRADE SHALL BE PERMITTED AFTER REINFORCING STEEL IS INSTALLED ABOVE SUBGRADE. NO TRAFFIC SHALL BE PERMITTED BEFORE OR DURING THE PLACING OF CONCRETE.

2.5. CONCRETE PAVEMENT:
- 2.5.1. ALL CONCRETE STRENGTH AND MIX DESIGN SHALL BE AS SHOWN IN LATEST EDITION OF NCTCOG SECTION 303.3
- 2.5.2. CLASS P1 PAVEMENT : MACHINE FINISHED: A SLIP-FORM PAVING MACHINE SHALL BE USED FOR ALL PUBLIC STREETS AND ALLEYS UNLESS OTHERWISE APPROVED BY THE DIRECTOR OF PUBLIC WORKS & ENGINEERING SERVICES. MIN. 4000 PSI 28-DAY COMPRESSIVE STRENGTH.

- 2.5.3. CLASS P2 PAVEMENT : HAND FINISHED: HAND FINISHED PAVEMENT IS PERMITTED FOR TURN LANES, DECELERATION LANES, DRIVEWAY APPROACHES, OR PANEL REPLACEMENT OF PUBLIC STREETS OR ALLEYS. MIN. 4500 PSI 28-DAY COMPRESSIVE STRENGTH

2.5.4. MINIMUM PAVEMENT THICKNESS SHALL BE AS FOLLOWS:
- 2.5.4.1. MAJOR ARTERIAL - 10" CLASS "P1" OR "P2"
- 2.5.4.2. MINOR ARTERIAL – 8" CLASS "P1" OR "P2"
- 2.5.4.3. COMMERCIAL/ INDUSTRIAL COLLECTOR – 8" CLASS "P1" OR "P2"
- 2.5.4.4. RESIDENTIAL COLLECTOR – 8" CLASS "P1" OR "P2"
- 2.5.4.5. RESIDENTIAL LOCAL – 8" CLASS "P1" OR "P2"
- 2.5.4.6. SIDEWALK AND BFR'S – 4" – CLASS "A" 3600 PSI @ 28 Days
- 2.5.4.7. DRIVE APPROACH 8" – CLASS "P2"
- 2.5.4.8. ALLEY – 6" CLASS "P1" OR "P2"
- 2.5.4.9. FIRE LANE – 6" CLASS "P1" OR "P2"

2.5.5. CONCRETE FOR ALLEY RETURNS AND DRIVEWAYS SHALL HAVE A MINIMUM COMPRESSIVE STRENGTH AT 28 DAYS IDENTICAL TO THAT SPECIFIED FOR THE STREET PAVEMENT OR BASE WHEN BUILT AS COMPONENTS OF A CONCRETE PAVING PROJECT. WHEN BUILT SEPARATELY, THE STRENGTH SHALL BE AS SPECIFIED ON THE CONSTRUCTION PLAN.

2.5.6. SPACING AND CONSTRUCTION OF JOINTS SHALL CONFORM TO TOWN OF ADDISON STANDARD CONSTRUCTION DETAILS.

2.5.7. CONTRACTOR IS RESPONSIBLE FOR ENSURING ALL PEDESTRIAN WORK MEETS OR EXCEEDS THE CURRENT AMERICANS WITH DISABILITIES ACT ACCESSIBILITY GUIDELINES (ADAAG), THE TEXAS ACCESSIBILITY STANDARDS (TAS), AND PUBLIC RIGHTS-OF-WAY ACCESSIBILITY GUIDELINES (PROWAG). THE CONTRACTOR SHALL REMOVE AND REPLACE ANY CONSTRUCTED OR INSTALLED ITEMS NOT MEETING THE CURRENT ADAAG, TAS, & PROWAG REQUIREMENTS AT NO ADDITIONAL COST TO THE TOWN.

2.5.8. ALL MEDIANS AND PARKWAYS SHALL BE PROVIDED WITH GROUND COVER. TYPE OF GROUNDCOVER SHALL BE DETERMINED BY THE PARKS & RECREATION DEPARTMENT, OR SHALL BE RESTORED TO MATCH EXISTING PLANT MATERIALS IN EQUAL OR BETTER CONDITION. ALL TURF AREAS SHALL BE SOLID SOD, AND GROUNDCOVER SHALL BE MINIMUM ONE (1) GALLON PLANT MATERIAL.

2.5.9. THE USE OF HIGH EARLY STRENGTH (HES) CONCRETE SHALL BE PERMITTED WHERE EARLY OPENING TO TRAFFIC IS REQUIRED AND IDENTIFIED IN THE PLANS. HES CONCRETE SHALL COMPLY WITH THE PROVISIONS OF TXDOT 360, CONCRETE PAVEMENT.

2.5.10. CONTRACTOR SHALL COMPLY WITH NCTCOG SECTION 107.20.3 FOR TRENCH SAFETY AND SUBMIT A SIGNED AND SEALED TRENCH SAFETY PLAN TO THE TOWN PRIOR TO CONSTRUCTION.

3. GENERAL NOTES FOR WATER AND WASTEWATER SYSTEMS

3.1. ALL WATER AND WASTEWATER CONSTRUCTION, TESTING, AND MATERIALS SHALL BE IN ACCORDANCE WITH THE MORE RESTRICTIVE OF THE CURRENT TCEQ REGULATIONS OR THE TOWN'S CURRENT STANDARDS, DETAILS, AND SPECIFICATIONS, UNLESS OTHERWISE NOTED.

3.2. TRENCH SAFETY
- 3.2.1. PRIVATE DEVELOPMENT: CONTRACTOR SHALL SUBMIT A TRENCH SAFETY PLAN TO THE DESIGN ENGINEER FOR REVIEW AND APPROVAL PRIOR TO THE PRE-CONSTRUCTION MEETING.
- 3.2.2. PUBLIC PROJECTS: CONTRACTOR AND/OR DESIGN ENGINEER SHALL SUBMIT A TRENCH SAFETY PLAN AS PART OF THE CIVIL CONSTRUCTION DOCUMENTS PACKAGE.

3.3. CONTRACTOR SHALL NOT OPERATE ANY WATER VALVES THAT ARE PART OF THE ACTIVE TOWN OF ADDISON WATER SYSTEM. CONTACT THE TOWN'S PUBLIC WORKS & ENGINEERING SERVICES TO REQUEST VALVE CHANGES.

3.4. ANY EXISTING FIRE HYDRANT THAT IS TO BE MODIFIED AND HAS A DATE THAT EXCEEDS 8 YEARS IN AGE SHALL BE REPLACED AND THE OLD FIRE HYDRANT RETURNED TO THE PUBLIC WORKS & ENGINEERING SERVICES BY THE CONTRACTOR AT HIS EXPENSE.

3.5. ANY EXISTING MANHOLE WITH AN OPENING SMALLER THAN 30" DIAMETER THAT IS MODIFIED SHALL HAVE THE CONE SECTION, RING, AND COVER REPLACED WITH A MINIMUM OF 30" DIAMETER CONE SECTION, RING, AND COVER BY THE CONTRACTOR AT HIS EXPENSE.

3.6. CONTRACTOR SHALL PROVIDE DOMESTIC, IRRIGATION, AND FIRE BACKFLOW DETECTION METERS. CONTRACTOR IS RESPONSIBLE FOR INSTALLATION OF METERS IN APPROVED BOXES AND CONNECTING PUBLIC TO PRIVATE WATER LINES.

3.7. CONTRACTOR SHALL SUBMIT A VIDEO DOCUMENTING EXISTING SITE CONDITIONS TO THE TOWN FOR REVIEW PRIOR TO START OF CONSTRUCTION.

3.8. CONTRACTOR SHALL VERIFY THE HORIZONTAL AND VERTICAL LOCATION OF ALL EXISTING UTILITIES PRIOR TO CONSTRUCTION. ALL COSTS ASSOCIATED WITH UTILITY LOCATION AND VERIFICATION SHALL BE SUBSIDIARY TO THE ASSOCIATED WORK.

3.9. CONTRACTOR SHALL INSTALL ALL WASTEWATER LATERALS AT A MINIMUM SLOPE OF 2.0%, UNLESS OTHERWISE NOTED, AND PROVIDE A MINIMUM OF 4 FEET OF COVER AT THE CLEANOUT LOCATED AT THE PROPERTY LINE. FLOWLINE ELEVATION OF THE PROPOSED LATERAL AT THE WASTEWATER MAIN CONNECTION SHALL BE AS SHOWN ON THE PLANS.

4. GENERAL NOTES FOR STORM DRAIN SYSTEMS

4.1. ALL STORM DRAIN CONSTRUCTION, TESTING, AND MATERIALS SHALL BE IN ACCORDANCE WITH THE LATEST EDITION OF NCTCOG'S SPECIFICATIONS AND DETAILS, AND THE TOWN'S CURRENT STANDARDS, DETAILS, AND SPECIFICATIONS UNLESS OTHERWISE NOTED.

4.2. TRENCH SAFETY
- 4.2.1. PRIVATE DEVELOPMENT: CONTRACTOR SHALL SUBMIT A TRENCH SAFETY PLAN TO THE DESIGN ENGINEER FOR REVIEW AND APPROVAL PRIOR TO THE PRE-CONSTRUCTION MEETING.
- 4.2.2. PUBLIC PROJECTS: CONTRACTOR AND/OR DESIGN ENGINEER SHALL SUBMIT A TRENCH SAFETY PLAN AS PART OF THE CIVIL CONSTRUCTION DOCUMENTS PACKAGE.

4.3. ALL CONCRETE DRAINAGE STRUCTURES SHALL BE MINIMUM CLASS C CONCRETE.

4.4. ALL CRUSHED STONE SHALL BE ¾", PASSING #4 SIEVE (GRADE 4).

4.5. ALL FIELD JOINTS WILL BE APPROVED BY THE TOWN ENGINEER IF NECESSARY. FIELD JOINTS SHALL BE WIPED ON THE INSIDE AND OUTSIDE AND PROVIDE FOR SMOOTH FLOW OF WATER.

4.6. RAMNECK COMPOUND OR APPROVED EQUAL SHALL BE USED FOR JOINT SEALS.

4.7. CLEANING & INSPECTION
- 4.7.1. ALL STORM SEWER PIPE SHALL BE CAMERA INSPECTED AFTER THE INSTALLATION OF ALL PAVING AND UTILITIES AND PRIOR TO FINAL ACCEPTANCE OF THE PROJECT.
- 4.7.2. CONTRACTOR SHOULD INSPECT ALL STORM DRAIN OUTFALLS NO EARLIER THAN ONE WEEK PRIOR TO FINAL INSPECTION AND REMOVE ALL SILT AND DEBRIS.

5. GENERAL NOTES FOR EROSION CONTROL

5.1. ALL OPERATORS AND/OR CONTRACTORS SHALL CONFORM TO THE TERMS & CONDITIONS OF THE TCEQ TPDES GENERAL PERMIT NO. 150000.
- 5.1.1. THE NOTICE OF INTENT (NOI), AS REQUIRED BY THE GENERAL PERMIT, MUST BE PROPERLY DISPLAYED ON THE SITE AT ALL TIMES BY EACH OPERATOR. A COPY OF THE NOI MUST BE PROVIDED TO THE PUBLIC WORKS & ENGINEERING SERVICES PRIOR TO START OF CONSTRUCTION.
- 5.1.2. ALL RELEASES OF REPORTABLE QUANTITIES OF HAZARDOUS SUBSTANCES SHALL BE REPORTED IMMEDIATELY TO THE FACILITY OPERATOR, EPA, AND TCEQ.
- 5.1.3. IF ANY CONTRACTOR SEES A VIOLATION BY AN OPERATOR OR ANOTHER CONTRACTOR, THAT OPERATOR OR CONTRACTOR IN VIOLATION SHALL BE NOTIFIED AS WELL AS THE FACILITY OPERATOR.

5.2. EROSION CONTROL DEVICES SHALL BE INSTALLED ON ALL PROJECTS PRIOR TO ANY SOIL DISTURBANCE AND SHALL BE MAINTAINED THROUGHOUT THE PROJECT IN A CONDITION ACCEPTABLE TO THE TOWN.
- 5.2.1. IT SHALL BE THE CONTRACTOR'S RESPONSIBILITY TO CONTROL AND LIMIT SILT AND SEDIMENT LEAVING THE SITE. SPECIFICALLY , THE CONTRACTOR SHALL PROTECT ALL PUBLIC STREETS, ALLEYS, STREAMS, AND STORM DRAINAGE SYSTEMS FROM EROSION DEPOSITS.
  - 5.2.1.1. QUALIFIED OPERATOR PERSONNEL MUST INSPECT THE SITE WEEKLY, AND WITHIN 24 HRS (BEFORE AND AFTER) A STORM EVENT OF 0.5 INCHES OR GREATER.
  - 5.2.1.2. ACCUMULATED SILT DEPOSITS SHALL BE REMOVED FROM SILT FENCES AND HAY BALE DIKES WHEN SILT DEPTH REACHES THREE INCHES (3") OR 25% OF THE HEIGHT OF THE DEVICE (WHICHEVER IS LESS). THE SILT SHALL BE DISPOSED OF AT AN APPROVED SITE AND IN SUCH A MANNER SO AS NOT TO CONTRIBUTE TO ADDITIONAL SILTATION.
- 5.2.2. THE CONTRACTOR SHALL ADD OR DELETE EROSION PROTECTION AT THE REQUEST AND DIRECTION OF THE OPERATOR OR TOWN.
- 5.2.3. MODIFICATIONS TO THE SWPPP SHALL BE IMPLEMENTED AND IN-PLACE WITHIN A SEVEN CALENDAR DAY PERIOD. ANY MAJOR MODIFICATIONS SHALL BE REVIEWED AND APPROVED BY THE DESIGN ENGINEER AND PUBLIC WORKS & ENGINEERING SERVICES PRIOR TO IMPLEMENTATION.

5.3. CONSTRUCTION ENTRANCES AND WASHOUTS
- 5.3.1. ASPHALT BAGS SHALL BE PLACED AT CONSTRUCTION ENTRANCES TO PREVENT CURB DAMAGE.
- 5.3.2. GEOTEXTILE FABRIC SHALL BE PLACED ON SUBGRADE PRIOR TO STONE PLACEMENT FOR CONSTRUCTION ENTRANCES.
- 5.3.3. NO EQUIPMENT SHALL BE CLEANED ON-SITE, OR OTHER LIQUIDS DEPOSITED AND ALLOWED TO FLOW OVERLAND OR SUBTERRANEAN WITHIN THE LIMITS OF

THE CRITICAL ROOT ZONE OF TREES THAT REMAIN ON SITE. THIS INCLUDES PAINT, OIL, SOLVENTS, ASPHALT, CONCRETE, CONCRETE EQUIPMENT WASH WATER, MORTAR OR SIMILAR MATERIALS.

5.4. WASTE DISPOSAL
- 5.4.1. CONTRACTOR SHALL PROVIDE WASTE DISPOSAL CONTAINERS ON THE SITE FOR DISPOSAL OF ALL NON-HAZARDOUS CONSTRUCTION WASTE MATERIALS. THE CONTAINERS SHALL BE HAULED TO THE APPROPRIATE DISPOSAL LOCATION BY THE CONTRACTOR.
- 5.4.2. ALL HAZARDOUS MATERIALS SHALL BE HANDLED AND DISPOSED OF BY THE CONTRACTOR IN ACCORDANCE WITH FEDERAL, STATE, AND LOCAL REGULATIONS.

5.5. AFTER INSTALLATION OF PAVEMENT, FINAL LOT BENCHING, AND GENERAL CLEANUP, THE CONTRACTOR SHALL ESTABLISH GRASS GROUNDCOVER IN ALL STREET PARKWAYS, LOTS, AND ALL OTHER DISTURBED AREAS. SODDING SHALL BE DONE AS SPECIFIED BY THE MORE RESTRICTIVE OF CURRENT NCTCOG OR TOWN STANDARDS.

5.6. SILT FENCE NOTES.
- 5.6.1. POSTS WHICH SUPPORT THE SILT FENCE SHALL BE INSTALLED ON A SLIGHT ANGLE TOWARD THE ANTICIPATED RUNOFF SOURCE. THE POST MUST BE EMBEDDED A MINIMUM OF 18". STEEL POSTS SHALL NOT BE USED TO INSTALL EROSION CONTROL MEASURES WITHIN TOWN ROW.
- 5.6.2. THE TOE OF THE SILT FENCE SHALL BE TRENCHED IN WITH A SPADE OR MECHANICAL TRENCHER SO THAT THE DOWNSLOPE FACE OF THE TRENCH IS FLAT AND PERPENDICULAR TO THE LINE OF FLOW.
  - 5.6.2.1. THE TRENCH MUST BE A MINIMUM OF SIX INCHES (6") DEEP AND SIX INCHES (6") WIDE TO ALLOW FOR THE SILT FENCE FABRIC TO BE LAID IN THE GROUND AND BACKFILLED WITH COMPACTED MATERIAL.
  - 5.6.2.2. WHERE THE FENCE CANNOT BE TRENCHED IN (E.G. PAVEMENT), WEIGH DOWN FABRIC FLAP WITH WASHED GRAVEL ON THE UPHILL SIDE TO PREVENT FLOW UNDER FENCE.
- 5.6.3. WIRE REINFORCEMENT SHALL BE USED ON ALL SILT FENCE USED FOR EROSION CONTROL. SILT FENCE SHALL BE SECURELY FASTENED TO EACH SUPPORT POST. THERE SHALL BE A SIX INCH (6") DOUBLE OVERLAP, SECURELY FASTENED, WHERE ENDS OF FABRIC MEET.
- 5.6.4. SILT FENCE SHALL BE REMOVED WHEN THE SITE IS COMPLETELY STABILIZED SO AS NOT TO BLOCK OR IMPEDE STORM FLOW OR DRAINAGE.

Plotted By: Mitzi Kropp, Jeweph November 06, 2026 01:39:36pm C:\ACD\ACDProjects\Valley View\063543066_ADDISON PUBLIC\Project Files\CADD\Plan Sheets\GENERAL NOTES.dwg
This electronic drawing is connected with the contents and design presented herein, as an instrument of service is intended only for the specific purpose and client for which it was prepared. Reuse of and improper reliance on this document without written authorization and adaptation by Kimley-Horn and Associates, Inc. shall be without liability to Kimley-Horn and Associates, Inc.

No.	REVISIONS	DATE	BY

PROJECT NO. C00057/ BID NO. 27-31

Kimley»Horn
225 E. JOHN W. CARPENTER FREEWAY SUITE 1100
IRVING, TX 75062
PHONE: 214-565-0100
WWW.KIMLEY-HORN.COM
© 2026 KIMLEY-HORN AND ASSOCIATES, INC.
TEXAS REGISTERED ENGINEERING FIRM #F-928

11/06/2026
STATE OF TEXAS
L. NATHAN ANTE
96866
LICENSED
PROFESSIONAL ENGINEER
L. Nathan Ante

KHA PROJECT 063543066		
DATE 11/06/2026	DESIGNED BY	KCH
SCALE AS SHOWN	DRAWN BY	KCH
	CHECKED BY	FLS

ADDISON
ADDISON JUNCTION PUBLIC INFRASTRUCTURE IMPROVEMENTS

GENERAL NOTES
SHEET 1 OF 2

SHEET NUMBER
3

6. GENERAL NOTES FOR LANDSCAPING

6.1. ALL LANDSCAPING CONSTRUCTION, INSTALLATION, TESTING, AND MATERIALS SHALL BE IN ACCORDANCE WITH THE TOWN'S CURRENT STANDARDS, DETAILS, AND SPECIFICATIONS UNLESS OTHERWISE NOTED.
6.2. CONTRACTOR SHALL AVOID DAMAGE TO EXISTING TREES. WHEN NECESSARY, TREES AND SHRUB TRIMMING FOR CONSTRUCTION SHALL BE PERFORMED BY CERTIFIED TREE WORKER OR UNDER THE DIRECTION OF A REGISTERED LANDSCAPE ARCHITECT OR CERTIFIED ARBORIST.
6.3. CONTRACTOR SHALL LOCATE AND PROTECT ALL EXISTING LANDSCAPE IRRIGATION SYSTEMS. DAMAGE TO EXISTING IRRIGATION SYSTEMS AND LANDSCAPE MATERIALS SHALL BE RESTORED TO EQUAL OR BETTER CONDITION AT NO COST TO TOWN.
6.4. CONTRACTOR TO COORDINATE WITH THE TOWN TO IDENTIFY AND LOCATE ALL EXISTING IRRIGATION SYSTEMS PRIOR TO THE START OF CONSTRUCTION.
6.5. EXCAVATION OR GRADE CHANGES BELOW THE DRIPLINE OF EXISTING TREES ARE NOT ALLOWED UNLESS A TREE PROTECTION PLAN WHICH CONTAINS SPECIFIC INFORMATION ON THE ROOTS OF EACH TREE IS PROVIDED, AND APPROVED BY THE PARKS & RECREATION DEPARTMENT.
6.6. PRIOR TO OBTAINING A GRADING PERMIT OR SCHEDULING A PRE-CONSTRUCTION MEETING:
  6.6.1. WHERE TRANSPLANTING OR TREE REMOVAL IS REQUIRED, CONTRACTOR MUST APPLY FOR A TREE REMOVAL PERMIT. CONTACT PARKS & RECREATION DEPARTMENT FOR TREE REMOVAL PERMIT.
  6.6.2. ALL TREE MARKINGS AND PROTECTIVE FENCING MUST BE INSTALLED BY THE CONTRACTOR PER THE TOWN STANDARD DETAIL AND BE INSPECTED BY THE TOWN'S LANDSCAPE ARCHITECT.
  6.6.3. COORDINATE WITH PARKS DEPARTMENT ON ANY TREES THAT REQUIRE BEING TRANSPLANTED OR REMOVED FROM MEDIANS.
6.7. ANY TREE DESIGNATED "TO REMAIN" THAT IS WITHIN FIFTY FEET (50') OF PROPOSED CONSTRUCTION ACTIVITY, WHETHER ON-SITE OR OFF-SITE, SHALL HAVE TREE PROTECTION PER THE TOWN OF ADDISON STANDARD DETAIL.
6.8. TREES TO BE REMOVED MAY BE CHIPPED AND USED FOR MULCH ON SITE OR HAULED OFF-SITE. BURNING OF REMOVED TREES, STUMPS, OR FOLIAGE REQUIRES WRITTEN APPROVAL BY THE FIRE DEPARTMENT.
6.9. PLANT MATERIALS SHALL NOT IMPEDE OR OBSTRUCT VISION OR ROUTE OF TRAVEL FOR VEHICULAR, PEDESTRIAN, OR BICYCLE TRAFFIC ALONG TOWN RIGHT-OF-WAY, VISIBILITY EASEMENTS, SIDEWALKS OR OTHER EASEMENTS.
6.10. NO SIGNS, WIRES, OR OTHER ATTACHMENTS OTHER THAN THOSE OF A PROTECTIVE NATURE SHALL BE ATTACHED TO ANY TREE TO REMAIN ON SITE.
6.11. IF TOPSOIL IS TO BE ADDED TO A ROUGH GRADE, TILL 3 TO 4 INCHES DEEP, THEN ADD TOPSOIL FOR BETTER BINDING AND ELIMINATE LAYERING.
6.12. SOD INSTALLATION

6.12.1. SPRAY EXISTING WEEDS WITH NON-SELECTIVE HERBICIDE PRIOR TO SOD INSTALLATION.
6.12.2. ON PUBLIC PROJECTS, THE TOWN'S REPRESENTATIVE RESERVES THE RIGHT TO INSPECT SOD FARM TO SELECT SOD TO BE HARVESTED. INSPECTION OF TURFGRASS SOD BY THE TOWN'S REPRESENTATIVE MAY BE MADE AT THE GROWING SITE, BUT SUCH INSPECTION WILL NOT PRECLUDE REJECTIONS AFTER DELIVERY TO THE JOB SITE.
6.12.3. NO MORE TURFGRASS SOD SHALL BE DELIVERED TO THE JOB SITE ON ANY DAY THAN CAN BE PLACED AND WATERED ON THAT DAY.
6.12.4. THE IRRIGATION SYSTEM SHOULD BE FULLY OPERATIONAL AT THE SITE PRIOR TO INSTALLATION OF THE TURFGRASS SOD.
6.12.5. ANY TURFGRASS SOD SO REJECTED SHALL BE REMOVED FROM THE SITE IMMEDIATELY AND REPLACED WITH ACCEPTED TURFGRASS SOD.
6.12.6. CONTRACTOR SHALL PROVIDE OPTIMUM INSTALLATION TIME PERIOD FOR SOD. NO INSTALLATION ON FROZEN SOIL. NO HARVEST OF FROZEN SOD.
6.13. PLANTING TIME FOR MEDIANS IS MARCH TO SEPTEMBER. OUTSIDE OF THIS TIME FRAME THE MEDIAN SHALL BE STABILIZED.
6.14. ESCROW FOR THE REMOVAL OF TEMPORARY STABILIZATION AND INSTALLATION OF SOD PER SPEC.

7. GENERAL NOTES FOR IRRIGATION

7.1. ALL IRRIGATION CONSTRUCTION, INSTALLATION, TESTING, AND MATERIALS SHALL BE IN ACCORDANCE WITH THE TOWN'S CURRENT STANDARDS, DETAILS, AND SPECIFICATIONS UNLESS OTHERWISE NOTED.
7.2. A PERMIT FROM THE BUILDING INSPECTION DIVISION IS REQUIRED FOR EACH IRRIGATION SYSTEM.
7.3. CONTRACTOR SHALL NOTIFY THE PARKS AND RECREATION DEPARTMENT PRIOR TO ANY MODIFICATIONS TO THE EXISTING IRRIGATION SYSTEM.
7.4. CONTRACTOR SHALL CONTACT THE PARKS AND RECREATION DEPARTMENT TO COORDINATE WORK PRIOR TO COMMENCING WORK ON ANY EXISTING IRRIGATION AND PRIOR TO ANY INSTALLATION OF NEW IRRIGATION.
7.5. CONTRACTOR SHALL LOCATE AND PROTECT ALL EXISTING LANDSCAPE IRRIGATION SYSTEMS. DAMAGE TO EXISTING IRRIGATION SYSTEMS AND LANDSCAPE MATERIALS SHALL BE RESTORED TO EQUAL OR BETTER CONDITION AT NO COST TO TOWN.
7.6. CONTRACTOR SHALL PROGRAM EACH CONTROLLER ZONE BASED ON SPRINKLER TYPE, PLANT VARIETY, SOIL CHARACTERISTIC, SLOPE AND SOLAR ORIENTATION AS DESIGNATED ON THE PLANS. THE CONTRACTOR SHALL COORDINATE WITH THE TOWN PARKS AND RECREATION DEPARTMENT FOR APPROVAL OF THE CONTROLLER SETTINGS.
7.7. CONTRACTOR SHALL BE RESPONSIBLE FOR COORDINATING WITH FRANCHISE UTILITY PROVIDER TO PROVIDE POWER TO EACH IRRIGATION CONTROLLER. CONTRACTOR SHALL HAVE UNDERGROUND POWER LINES INSTALLED FROM POWER SOURCE UP TO THE CONTROLLER. CONTRACTOR SHALL MEET CONTROLLER SPECIFICATIONS FOR POWER REQUIREMENTS.
7.8. CONTRACTOR SHALL SET TOWN-SPECIFIED/APPROVED CONTROLLER TO ESTABLISH LANDSCAPE.

8. GENERAL NOTES FOR TRAFFIC CONTROL

8.1. CONTRACTOR SHALL BE RESPONSIBLE FOR FURNISHING AND INSTALLING ALL TEMPORARY AND PERMANENT TRAFFIC CONTROL IN ACCORDANCE WITH THE MINIMUM REQUIREMENTS OF THE LATEST REVISION OF THE TEXAS MANUAL ON UNIFORM TRAFFIC CONTROL DEVICES (TMUTCD) AND TXDOT BARRICADE AND CONSTRUCTION STANDARDS.
8.2. CONTRACTOR SHALL NOT IMPEDE TRAFFIC ON EXISTING STREETS, DRIVEWAYS, ALLEYS, OR FIRE LANES OPEN TO THE PUBLIC. IN THE EVENT THE CONSTRUCTION WORK REQUIRES THE CLOSURE OF AN EXISTING STREET, ALLEY, OR FIRE LANE, THE CONTRACTOR SHALL REQUEST THE ROAD CLOSURE THROUGH THE PUBLIC WORKS & ENGINEERING SERVICES A MINIMUM OF 72 HOURS IN ADVANCE OF THE REQUESTED CLOSURE. CLOSURES WILL NOT BE ALLOWED PRIOR TO 9:00 A.M. OR AFTER 3:30 P.M., MONDAY THROUGH FRIDAY UNLESS OTHERWISE APPROVED BY THE TOWN.

9. GENERAL NOTES FOR TRAFFIC SIGNALS AND STREET LIGHTING

9.1. ALL TRAFFIC SIGNAL AND STREET LIGHTING CONSTRUCTION, TESTING, AND MATERIALS SHALL BE IN ACCORDANCE WITH THE TOWN'S CURRENT STANDARDS, DETAILS, AND SPECIFICATIONS UNLESS OTHERWISE NOTED. ALL ELECTRICAL WORK SHALL BE IN ACCORDANCE WITH THE MOST CURRENT NATIONAL ELECTRICAL CODE, TOWN AND TXDOT SPECIFICATIONS AND STANDARDS.
9.2. CONTRACTOR SHALL NOTIFY THE TRAFFIC DEPARTMENT AT LEAST 7 BUSINESS DAYS PRIOR TO ANY WORK, PROVIDE A CONSTRUCTION SCHEDULE AND WEEKLY PROGRESS REPORTS TO THE TRAFFIC DEPARTMENT, AND NOTIFY THE TRAFFIC DEPARTMENT AT LEAST 48 HOURS PRIOR TO SIGNAL TURN-ON.
9.3. CONTRACTOR SHALL COORDINATE ELECTRICAL SERVICES WITH THE TOWN AND EITHER ONCOR OR COSERV REPRESENTATIVES (ACCORDING TO THEIR RESPECTIVE AREA).
9.4. CONTRACTOR SHALL COORDINATE WITH THE ELECTRIC COMPANY TO DE-ENERGIZE ANY OVERHEAD OR UNDERGROUND POWER LINES. ANY COST ASSOCIATED WITH DE-ENERGIZING THE POWER LINE AND/OR ANY OTHER PROTECTIVE MEASURES REQUIRED SHALL BE AT NO COST TO TOWN.
9.5. THE CONTRACTOR SHALL COORDINATE WITH THE APPROPRIATE UTILITY COMPANY AND TXDOT/NTTA (IF WITHIN TXDOT/NTTA ROW) PRIOR TO BEGINNING ERECTION OF POLES, LUMINAIRES AND STRUCTURES LOCATED NEAR ANY OVERHEAD OR UNDERGROUND UTILITIES.
9.6. PROPOSED CONCRETE FOUNDATION AND CONDUIT ALIGNMENT SHALL BE STAKED BY THE CONTRACTOR AND APPROVED BY THE TOWN PRIOR TO INSTALLATION.
9.7. CONTRACTOR SHALL CONTACT THE TOWN TRAFFIC DEPARTMENT (BETWEEN 8 AM – 5PM) FOR INSPECTION PRIOR TO POURING ANY CONCRETE FOUNDATION AND DIGGING FOR CONDUIT RUNS AT LEAST 48 HOURS IN ADVANCE.
9.8. CONTRACTOR SHALL HAVE A QUALIFIED IMSA LEVEL II OR A TRF453 CERTIFIED TECHNICIAN ON THE PROJECT SITE TO PLACE THE TRAFFIC SIGNALS IN OPERATION.
9.9. ELECTRICAL WORK SHALL BE PERFORMED BY CERTIFIED PERSONS IN ACCORDANCE WITH THE REQUIREMENTS OF THE CONTRACT AND MAY BE REJECTED AS UNSUITABLE FOR USE DUE TO POOR WORKMANSHIP. THE REQUIRED ELECTRICAL CERTIFICATION COURSE IS AVAILABLE AND IS SCHEDULED PERIODICALLY BY TEEX. ALTERNATIVELY, THE CONTRACTOR MAY PURCHASE AN ENTIRE COURSE FOR THEIR PERSONNEL TO BE HELD AT A TIME AND LOCATION OF THEIR CHOICE AS NEGOTIATED THROUGH TEEX. FOR MORE INFORMATION, CONTACT: TEXAS ENGINEERING EXTENSION SERVICE (TEEX), TXDOT ELECTRICAL SYSTEM COURSE.
9.10. THE CONTRACTOR SHALL NOT PLACE PEDESTRIAN CROSSWALK AND STOP BAR PAVEMENT MARKINGS UNTIL SIGNAL IS OPERATIONAL.
9.11. ALL LIGHTING POLES, FIXTURES, AND ARMS WHICH ARE REMOVED SHALL BE DELIVERED TO THE TOWN PUBLIC WORKS & ENGINEERING SERVICES FACILITY BY THE CONTRACTOR AND WILL REMAIN THE PROPERTY OF THE TOWN. CONTACT THE TRAFFIC DEPARTMENT AT LEAST 24 HOURS IN ADVANCE OF DELIVERY.
9.12. DURING THE 30-DAY TRAFFIC SIGNAL TEST PERIOD, CONTRACTOR SHALL RESPOND TO AND DIAGNOSE ALL TROUBLE CALLS WITH QUALIFIED PERSONNEL WITHIN A REASONABLE TRAVEL TIME FROM A DALLAS ADDRESS, BUT NOT MORE THAN TWO (2) HOURS MAXIMUM. CONTRACTOR SHALL REPAIR ANY MALFUNCTIONS OF SIGNAL EQUIPMENT SUPPLIED BY CONTRACTOR ON THE PROJECT. A LOCAL TELEPHONE NUMBER (NOT SUBJECT TO FREQUENT CHANGES) WHERE TROUBLE CALLS ARE TO BE RECEIVED ON A 24-HOUR BASIS SHALL BE PROVIDED TO THE TOWN BY THE CONTRACTOR. APPROPRIATE REPAIRS SHALL BE MADE WITHIN 24 HOURS. THE CONTRACTOR SHALL KEEP A RECORD OF EACH TROUBLE CALL REPORTED IN THE LOGBOOK PROVIDED BY THE TOWN AND SHALL NOTIFY THE TOWN OF EACH TROUBLE CALL. THE ERROR LOG IN THE MALFUNCTION MANAGEMENT UNIT (MMU) SHALL NOT BE CLEARED DURING THE 30-DAY TEST PERIOD WITHOUT THE APPROVAL OF THE TOWN.
9.13. TEXAS STATE LAW, ARTICLE 1436C, MAKES IT UNLAWFUL TO OPERATE EQUIPMENT OR MACHINES WITHIN 10-FEET OF ANY OVERHEAD ELECTRICAL LINES UNLESS DANGER AGAINST CONTACT WITH HIGH VOLTAGE OVERHEAD LINES HAS BEEN EFFECTIVELY GUARDED AGAINST PURSUANT TO THE PROVISIONS OF THIS ARTICLE. WHEN CONSTRUCTION OPERATIONS REQUIRE WORKING NEAR AN OVERHEAD ELECTRICAL LINE, THE CONTRACTOR SHALL CONTACT THE OWNER/OPERATOR OF THE OVERHEAD ELECTRICAL LINE TO MAKE ADEQUATE ARRANGEMENTS AND TO TAKE NECESSARY SAFETY PRECAUTIONS TO ENSURE THAT ALL LAWS, ELECTRICAL LINE OWNER/OPERATOR REQUIREMENTS AND STANDARD SAFETY PRACTICES ARE MET.

No.	REVISIONS	DATE	BY

PROJECT NO. C00057/ BID NO. 27-31

Kimley»Horn
225 E. JOHN W. CARPENTER FREEWAY SUITE 1100
IRVING, TX 75062
PHONE: 214.565.0090
WWW.KIMLEY-HORN.COM
© 2026 KIMLEY-HORN AND ASSOCIATES, INC.
TEXAS REGISTERED ENGINEERING FIRM #F-928

11/06/2026

STATE OF TEXAS
L. NATHAN ANTE
96866
LICENSED
PROFESSIONAL ENGINEER

KHA PROJECT 063543066
DATE 11/06/2026
SCALE AS SHOWN
DESIGNED BY KCH
DRAWN BY KCH
CHECKED BY FLS

ADDISON
ADDISON JUNCTION PUBLIC INFRASTRUCTURE IMPROVEMENTS

GENERAL NOTES
SHEET 2 OF 2

SHEET NUMBER
4

Plotted By: Mitzi Knapp Jaresch November 05, 2026 01:39:38pm C:\ACD\Acadcivil\Library-Xrefs\063543066-ADDISON JUNCTION PUBLIC\Project Files\CADD\PlanSheet\GENERAL NOTES.dwg
This document, together with the concepts and designs presented herein, as an instrument of service, is intended only for the specific purpose and client for which it was prepared. Reuse of and improper reliance on this document without written authorization and adaptation by Kimley-Horn and Associates, Inc. shall be without liability to Kimley-Horn and Associates, Inc.

Plotted By: Mercer, Joseph November 06, 2026 01:39:51pm C:\ACV\ACCDocs\Viktor Hron\06354306-ADDISON JUNCTION PUBLIC\Project Files\CAD\ProjSheets\PROJECT CONTROL.dwg
This document, together with the concepts and designs presented herein, as an instrument of service is intended only for the specific purpose and client for which it was prepared. Reuse of and improper reliance on this document without written authorization and adaptation by Kimley-Horn and Associates, Inc. shall be without liability to Kimley-Horn and Associates, Inc.

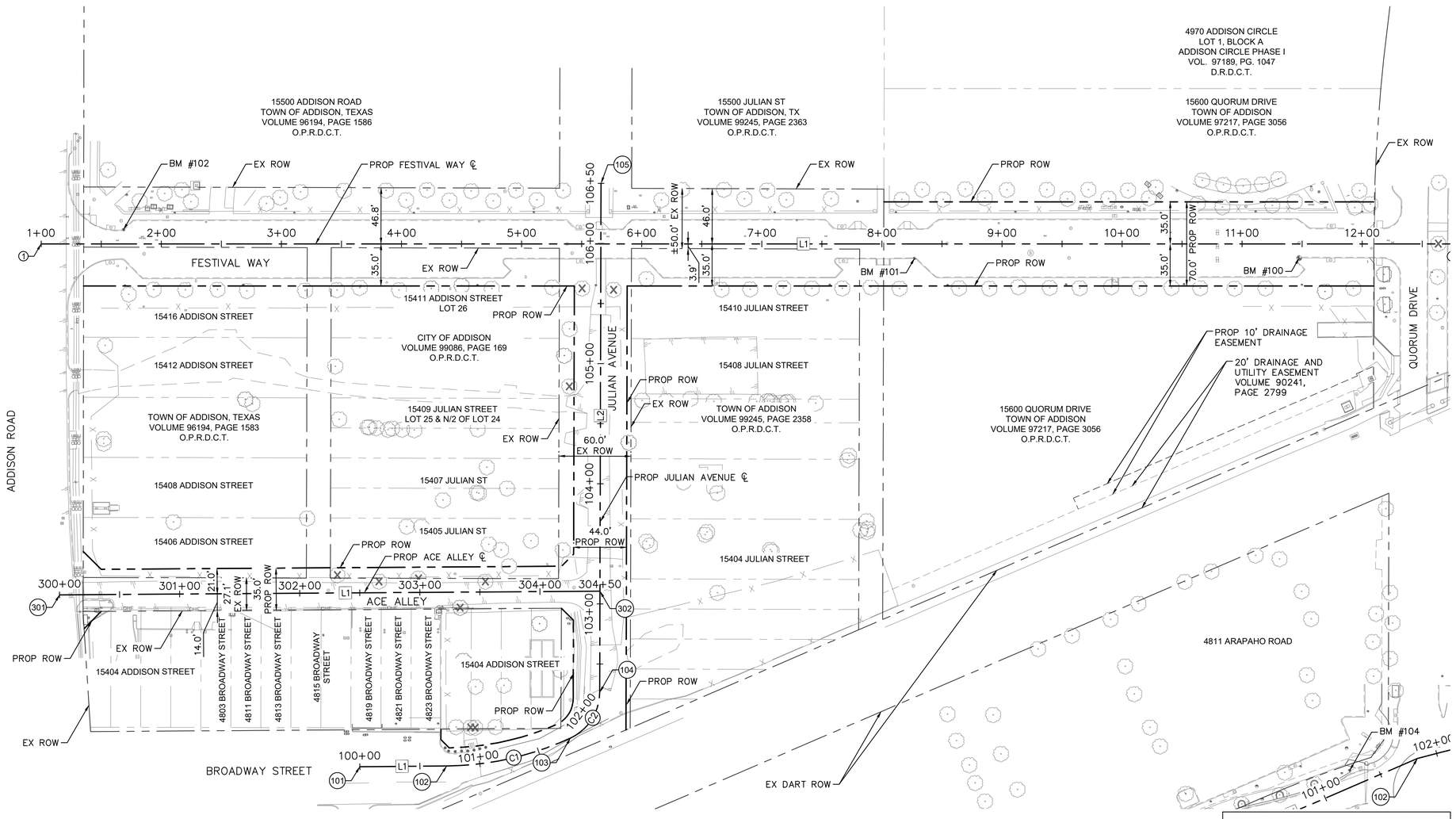

BENCHMARK LIST

BM#100 MAG–NAIL W/ WASHER "YP CONTROL PT" SET IN TOP OF CURB, IN THE CENTER OF CURB AT THE 1ST PARKING SPACE WEST OF QUORUM DRIVE, SOUTH SIDE OF CLARA STREET AT THE NOSE OF THE CURB. APPROXIMATELY 12.55'± SOUTH OF A MANHOLE IN THE CENTER OF CLARA STREET AND 26.19'± WEST OF A MANHOLE FOR A CURB INLET.

N = 7037304.080'
E = 2482103.741'
ELEV. = 625.51'

BM#101 MAG–NAIL W/ WASHER "YP CONTROL PT" SET IN THE TOP OF CURB AT THE NOSE OF CURB, ON THE WEST SIDE OF PARKING SPACES ON THE SOUTH SIDE OF CLARA STREET WEST OF QUORUM DRIVE. APPROXIMATELY 35.46'± FROM A LIGHT POLE AND 29.78'± SOUTHWEST OF A MANHOLE IN THE MIDDLE OF CLARA STREET.

N = 7037298.434'
E = 2481783.477'
ELEV. = 631.81'

BM#102 MAG–NAIL W/ WASHER "YP CONTROL PT" SET IN THE TOP OF CURB AT THE NOSE OF CURB ON THE NORTH SIDE OF CLARA STREET AT THE FIRST PARKING SPACE EAST OF ADDISON ROAD. APPROXIMATELY 31.48'± SOUTHEAST OF THE STOP SIGN AT THE INTERSECTION AND 30.66'± NORTH OF A LIGHT POLE.

N = 7037311.179'
E = 2481124.584'
ELEV. = 634.91'

BM#104 MAG–NAIL W/ WASHER "YP CONTROL PT" SET AT THE NORTHWEST CORNER OF THE 1ST CURB INLET WEST OF QUORUM DRIVE ON THE NORTH SIDE OF ARAPAHO. APPROXIMATELY 14.96'± SOUTHWEST OF A TRAFFIC SIGNAL POLE AND 18.65'± SOUTH OF A LIGHT POLE.

N = 7036878.445'
E = 2482152.966'
ELEV. = 625.70'

BM#105 MAG NAIL W/ WASHER "YP CONTROL PT" SET IN THE TOP OF A CONCRETE BORDER ON THE WEST WIDE OF SPECTRUM DRIVE. APPROXIMATELY 28.04'± NORTHWEST OF A STORM MANHOLE AND 19.31'± SOUTHWEST OF THE SOUTHWEST CORNER OF THE FIRST PARKING SPACE ON THE WEST SIDE OF THE ROAD NORTH OF THE INTERSECTION OF SPECTRUM AND ARAPAHO.

N = 7037144.503'
E = 2482616.211'
ELEV. = 618.84'

FESTIVAL WAY C/L CONTROL POINTS				
POINT	DESC.	STATION CONTROL	NORTHING	EASTING
1	BEGIN	1+00.00	N 7037298.16	E 2481056.21
2	END	12+90.00	N 7037318.27	E 2482246.04

FESTIVAL WAY C/L LINE TABLE		
LINE	LENGTH	BEARING
L1	1190.00	N89°01'54.90"E

ACE ALLEY C/L CONTROL POINTS				
POINT	DESC.	STATION CONTROL	NORTHING	EASTING
301	BEGIN	300+00.00	N 7037006.41	E 2481076.43
302	END	304+50.00	N 7037017.05	E 2481526.30

ACE ALLEY C/L LINE TABLE		
LINE	LENGTH	BEARING
L1	450.00	N88°38'43.42"E

JULIAN AVENUE C/L CONTROL POINTS				
POINT	DESC.	STATION CONTROL	NORTHING	EASTING
101	BEGIN	100+00.00	N 7036867.59	E 2481328.88
102	PC	100+72.30	N 7036869.46	E 2481401.15
103	PCC	101+78.79	N 7036894.46	E 2481503.84
104	PT	102+26.39	N 7036932.84	E 2481527.50
105	END	106+50.00	N 7037356.41	E 2481521.47

JULIAN AVENUE C/L LINE TABLE		
LINE	LENGTH	BEARING
L1	72.30	N88°31'07.90"E
L2	423.61	N0°48'56.10"W

JULIAN AVENUE C/L CURVE TABLE				
CURVE	RADIUS	LENGTH	DELTA	TANGENT
C1	250.00'	106.50'	24°24'26"	54.07'
C2	42.00'	47.59'	64°55'38"	26.72'

TOWN OF ADDISON MONUMENTS

COA–5 A 3.5" ALUMINUM DISK STAMPED "TOWN OF ADDISON NO 5", LOCATED WITHIN THE NORTHERLY SIDE OF A CONCRETE STORM INLET, 125' ± WEST FROM THE INTERSECTION OF THE SOUTH BOUND LANE OF "DALLAS PARKWAY SERVICE ROAD" AND BELT LINE ROAD, 1,081' ± EAST OF THE INTERSECTION OF QUORUM DRIVE AND BELT LINE ROAD.

N = 7034190.42'
E = 2482959.26'
ELEV. = 634.20'

COA–28 A 3.5" ALUMINUM DISK STAMPED "TOWN OF ADDISON NO 28", LOCATED WITHIN A POURED CONCRETE BOREHOLE ALONG THE EASTERLY RIGHT–OF–WAY OF QUORUM DRIVE, 53' SOUTH FROM THE INTERSECTION OF QUORUM DRIVE AND BELT LINE ROAD, 1,925' ± NORTH OF THE INTERSECTION OF LANDMARK PLACE AND QUORUM DRIVE.

N = 7034032.25'
E = 2481948.96'
ELEV. = 650.08'

NOTES

1. THE CONTRACTOR SHALL BE RESPONSIBLE FOR PROTECTING ANY EXISTING IRON RODS DURING THE COURSE OF CONSTRUCTION. ANY IRON RODS DISTURBED DURING CONSTRUCTION SHALL BE REPLACED BY THE CONTRACTOR PER CITY REQUIREMENTS (NON PAY ITEM)
2. HORIZONTAL CONTROL – NORTH CENTRAL ZONE OF THE TEXAS STATE PLANE COORDINATE SYSTEM (NAD83)
3. VERTICAL CONTROL IS NAVD 88

Know what's **below.**
Call before you dig.

No.	REVISIONS	DATE	BY

PROJECT NO. C00057/ BID NO. 27–31

Kimley»Horn
225 E. JOHN W. CARPENTER FREEWAY SUITE 1100
IRVING, TX 75062
PHONE: 214-369-2300
WWW.KIMLEY-HORN.COM
© 2026 KIMLEY-HORN AND ASSOCIATES, INC.
TEXAS REGISTERED ENGINEERING FIRM #F-928

11/06/2026

STATE OF TEXAS
L. NATHAN ANTE
96866
LICENSED
PROFESSIONAL ENGINEER
L. Nathan Ante

KHA PROJECT 063543066	DATE 11/06/2026	SCALE AS SHOWN	DESIGNED BY KCH
		DRAWN BY ZMZ	CHECKED BY FLS

ADDISON
ADDISON JUNCTION
PUBLIC
INFRASTRUCTURE
IMPROVEMENTS

PROJECT CONTROL
SHEET 1 OF 2

SHEET NUMBER
5

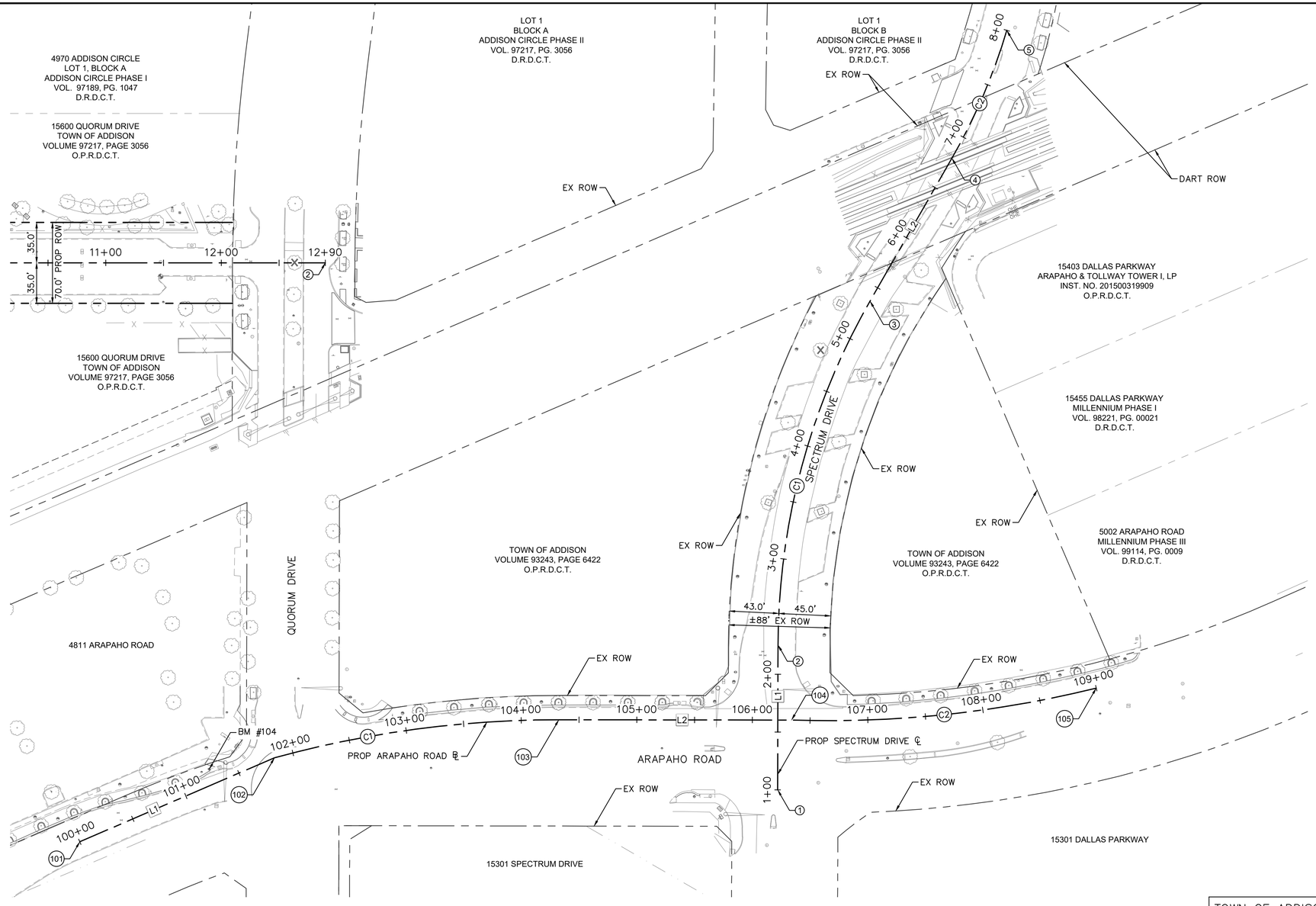

BENCHMARK LIST

BM#100 MAG–NAIL W/ WASHER "YP CONTROL PT" SET IN TOP OF CURB, IN THE CENTER OF CURB AT THE 1ST PARKING SPACE WEST OF QUORUM DRIVE, SOUTH SIDE OF CLARA STREET AT THE NOSE OF THE CURB. APPROXIMATELY 12.55'± SOUTH OF A MANHOLE IN THE CENTER OF CLARA STREET AND 26.19'± WEST OF A MANHOLE FOR A CURB INLET.

N = 7037304.080'
E = 2482103.741'
ELEV. = 625.51'

BM#101 MAG–NAIL W/ WASHER "YP CONTROL PT" SET IN THE TOP OF CURB AT THE NOSE OF CURB, ON THE WEST SIDE OF PARKING SPACES ON THE SOUTH SIDE OF CLARA STREET WEST OF QUORUM DRIVE. APPROXIMATELY 35.46'± FROM A LIGHT POLE AND 29.78'± SOUTHWEST OF A MANHOLE IN THE MIDDLE OF CLARA STREET.

N = 7037298.434'
E = 2481783.477'
ELEV. = 631.81'

BM#102 MAG–NAIL W/ WASHER "YP CONTROL PT" SET IN THE TOP OF CURB AT THE NOSE OF CURB ON THE NORTH SIDE OF CLARA STREET AT THE FIRST PARKING SPACE EAST OF ADDISON ROAD. APPROXIMATELY 31.48'± SOUTHEAST OF THE STOP SIGN AT THE INTERSECTION AND 30.66'± NORTH OF A LIGHT POLE.

N = 7037311.179'
E = 2481124.584'
ELEV. = 634.91'

BM#104 MAG–NAIL W/ WASHER "YP CONTROL PT" SET AT THE NORTHWEST CORNER OF THE 1ST CURB INLET WEST OF QUORUM DRIVE ON THE NORTH SIDE OF ARAPAHO. APPROXIMATELY 14.96'± SOUTHWEST OF A TRAFFIC SIGNAL POLE AND 18.65'± SOUTH OF A LIGHT POLE.

N = 7036878.445'
E = 2482152.966'
ELEV. = 625.70'

BM#105 MAG NAIL W/ WASHER "YP CONTROL PT" SET IN THE TOP OF A CONCRETE BORDER ON THE WEST WIDE OF SPECTRUM DRIVE. APPROXIMATELY 28.04'± NORTHWEST OF A STORM MANHOLE AND 19.31'± SOUTHWEST OF THE SOUTHWEST CORNER OF THE FIRST PARKING SPACE ON THE WEST SIDE OF THE ROAD NORTH OF THE INTERSECTION OF SPECTRUM AND ARAPAHO.

N = 7037144.503'
E = 2482616.211'
ELEV. = 618.84'

SPECTRUM DRIVE C/L CONTROL POINTS				
POINT	DESC.	STATION CONTROL	NORTHING	EASTING
1	BEGIN	1+00.00	N 7036868.95	E 2482645.18
2	PC	2+25.32	N 7036994.25	E 2482643.36
3	PT	5+36.79	N 7037293.08	E 2482717.95
4	PC	6+79.36	N 7037417.94	E 2482786.78
5	END	8+00.00	N 7037529.34	E 2482832.38

ARAPAHO ROAD B/L CONTROL POINTS				
POINT	DESC.	STATION CONTROL	NORTHING	EASTING
101	BEGIN	100+00.00	N 7036813.84	E 2482042.00
102	PC	101+83.49	N 7036889.36	E 2482209.23
103	PT	104+32.55	N 7036926.38	E 2482454.77
104	PC	106+34.04	N 7036929.55	E 2482656.24
105	END	109+00.00	N 7036961.58	E 2482919.42

SPECTRUM DRIVE C/L LINE TABLE		
LINE	LENGTH	BEARING
L1	125.32	N0°49'52.84"W
L2	142.57	N28°51'43.50"E

SPECTRUM DRIVE C/L CURVE TABLE				
CURVE	RADIUS	LENGTH	DELTA	TANGENT
C1	601.00'	311.47'	29°41'36"	159.32'
C2	523.60'	120.64'	13°12'04"	60.59'

ARAPAHO ROAD B/L LINE TABLE		
LINE	LENGTH	BEARING
L1	183.49	N65°41'53.91"E
L2	201.49	N89°05'52.85"E

ARAPAHO ROAD B/L CURVE TABLE				
CURVE	RADIUS	LENGTH	DELTA	TANGENT
C1	930.00'	249.06'	15°20'39"	125.28'
C2	970.50'	265.96'	15°42'06"	133.82'

TOWN OF ADDISON MONUMENTS

COA–5 A 3.5" ALUMINUM DISK STAMPED "TOWN OF ADDISON NO 5", LOCATED WITHIN THE NORTHERLY SIDE OF A CONCRETE STORM INLET, 125' ± WEST FROM THE INTERSECTION OF THE SOUTH BOUND LANE OF "DALLAS PARKWAY SERVICE ROAD" AND BELT LINE ROAD, 1,081' ± EAST OF THE INTERSECTION OF QUORUM DRIVE AND BELT LINE ROAD.

N = 7034190.42'
E = 2482959.26'
ELEV. = 634.20'

COA–28 A 3.5" ALUMINUM DISK STAMPED "TOWN OF ADDISON NO 28", LOCATED WITHIN A POURED CONCRETE BOREHOLE ALONG THE EASTERLY RIGHT–OF–WAY OF QUORUM DRIVE, 53' SOUTH FROM THE INTERSECTION OF QUORUM DRIVE AND BELT LINE ROAD, 1,925' ± NORTH OF THE INTERSECTION OF LANDMARK PLACE AND QUORUM DRIVE.

N = 7034032.25'
E = 2481948.96'
ELEV. = 650.08'

NOTES

1. THE CONTRACTOR SHALL BE RESPONSIBLE FOR PROTECTING ANY EXISTING IRON RODS DURING THE COURSE OF CONSTRUCTION. ANY IRON RODS DISTURBED DURING CONSTRUCTION SHALL BE REPLACED BY THE CONTRACTOR PER CITY REQUIREMENTS (NON PAY ITEM)
2. HORIZONTAL CONTROL – NORTH CENTRAL ZONE OF THE TEXAS STATE PLANE COORDINATE SYSTEM (NAD83)
3. VERTICAL CONTROL IS NAVD 88

Know what's **below.**
Call before you dig.

PROJECT NO. C00057/ BID NO. 27–31

No.	REVISIONS	DATE	BY

Kimley»Horn
225 E. JOHN W. CARPENTER FREEWAY SUITE 1100
IRVING, TX 75062
PHONE: 214.369.1600
WWW.KIMLEY-HORN.COM
© 2026 KIMLEY-HORN AND ASSOCIATES, INC.
TEXAS REGISTERED ENGINEERING FIRM #F-928

11/06/2026
STATE OF TEXAS
L. NATHAN ANTE
96866
LICENSED
PROFESSIONAL ENGINEER
L. Nathan Ante

KHA PROJECT 063543066
DATE 11/06/2026
SCALE AS SHOWN
DESIGNED BY KCH
DRAWN BY ZMZ
CHECKED BY FLS

ADDISON
ADDISON JUNCTION
PUBLIC
INFRASTRUCTURE
IMPROVEMENTS

PROJECT CONTROL
SHEET 2 OF 2

SHEET NUMBER
6

Plotted By: Mcmorris, Joseph November 06, 2026 01:39:50pm G:\ACAD\Projects\Vistas-Irwin\063543066-ADDISON JUNCTION PUBLIC\Project Files\CADD\Sheets\PROJECT CONTROL-FESTIVAL WAY.dwg
This document, together with the concepts and designs presented herein, as an instrument of service, is intended only for the specific purpose and client for which it was prepared. Reuse of and improper reliance on this document without written authorization and adaptation by Kimley-Horn and Associates, Inc. shall be without liability to Kimley-Horn and Associates, Inc.

Plotted By: Michael Devlin November 05, 2026 - 10:08:42pm R:\Projects\KHA_2620.02 - Addison Circle Str\Phase\4. SUE Survey Services\Work In Progress\KHA_2620.02-SUE_WORKING.DWG
This document, together with the concepts and designs presented herein, as an instrument of service, is intended only for the specific purpose and client for which it was prepared. Reuse of and improper reliance on this document without written authorization and adaptation by Kimley-Horn and Associates, Inc. shall be without liability to Kimley-Horn and Associates, Inc.

SHEET 2

SHEET 3

SHEET 4

SHEET 5

SHEET 6

SHEET 7

SHEET 8

SHEET 9

SHEET 10

NOT TO SCALE

Subsurface Utility Engineering (SUE) Certification

The engineer's seal hereon is to certify that the utilities shown have been investigated in accordance with standard SUE industry practices. Where indicated utility sizes and materials taken from best available records. All other information hereon has been provided by others and is not a part of this certification.

811 Know what's **below.** **Call** before you dig.

No.	REVISIONS	DATE	BY

PROJECT NO. XXXXX/ BID NO. XXXX-XXX

Kimley»Horn
225 E. JOHN W. CARPENTER FREEWAY SUITE 1100
IRVING, TX 75062
PHONE: 214.565.0500
WWW.KIMLEY-HORN.COM
© 2026 KIMLEY-HORN AND ASSOCIATES, INC.
TEXAS REGISTERED ENGINEERING FIRM #F-928

The Rios Group, Inc. 10/31/2025 142919 REGISTERED PROFESSIONAL ENGINEER CAITLIN B. BROWN
Caitlin Brown 11-05-2026

KHA PROJECT 063543066		
DATE		
SCALE	AS SHOWN	
DESIGNED BY	CBB	
DRAWN BY	MTD	
CHECKED BY	CBB	

CITY OF ADDISON
ADDISON JUNCTION
DEVELOPMENT
PUBLIC INFRASTRUCTURE
IMPROVEMENTS

THE RIOS GROUP
SUBSURFACE UTILITY ENGINEERING
UTILITY COORDINATION
7400 Sand Street
Fort Worth, Texas 76118
817.345.7500

SHEET NUMBER
7

Plotted By: Michael Devlin August 07, 2026 12:22:24pm R:\Projects\KHA_2630.00_Addison Circle Station\4_SUE Survey Services\Work in Progress\KHA_2630.00-AddisonCircleStation_SUE_WORKING.DWG
This document, together with the concepts and designs presented herein, as an instrument of service is intended only for the specific purpose and client for which it was prepared. Reuse of and improper reliance on this document without written authorization and adaptation by Kimley-Horn and Associates, Inc. shall be without liability to Kimley-Horn and Associates, Inc.

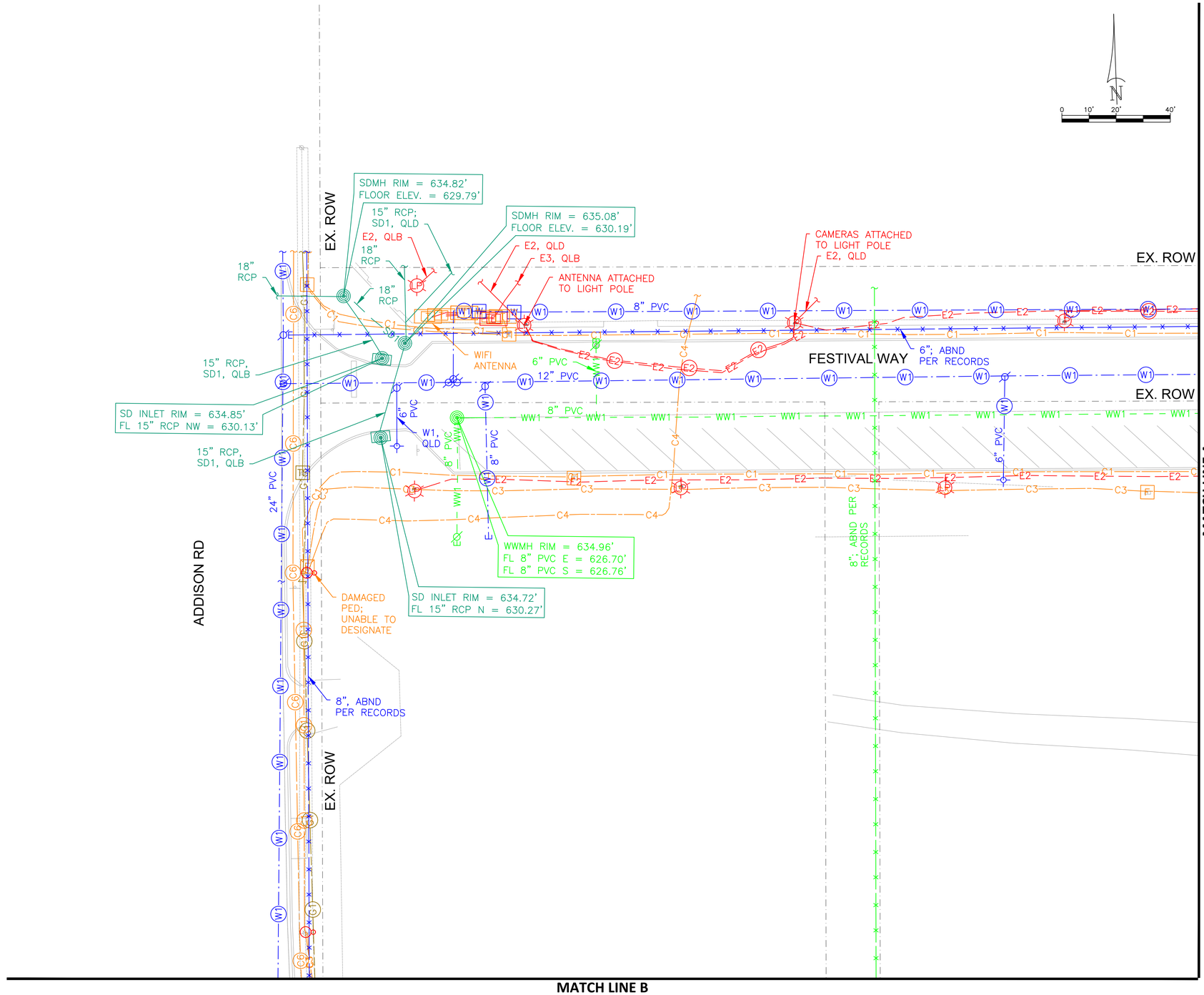

Subsurface Utility Engineering (SUE) Certification

The engineer's seal hereon is to certify that the utilities shown have been investigated in accordance with standard SUE industry practices. Where indicated utility sizes and materials taken from best available records. All other information hereon has been provided by others and is not a part of this certification.

LEGEND OF U.G. UTILITY TYPES

COMMUNICATIONS — **QL"B"**
- AT&T (FO/DUCT) — C1
- AT&T (TELE) — C2
- SPECTRUM (FO/DUCT) — C3
- SPECTRUM (CABLE) — C4
- LOGIX (FO/DUCT) — C5
- MCI (FO/DUCT) — C6

QL"C"/"D"
- AT&T (FO/DUCT) — C1
- AT&T (TELE) — C2
- SPECTRUM (FO/DUCT) — C3
- SPECTRUM (CABLE) — C4
- LOGIX (FO/DUCT) — C5
- MCI (FO/DUCT) — C6

GAS / PETROLEUM — **QL"B"**
- ATMOS — G1

QL"C"/"D"
- ATMOS — G1

ELECTRIC / POWER — **QL"B"**
- ONCOR — E1
- TOWN OF ADDISON — E2
- AT&T — E3

QL"C"/"D"
- ONCOR — E1
- TOWN OF ADDISON — E2
- AT&T — E3

TRAFFIC SIGNAL — **QL"B"**
- TOWN OF ADDISON — TS1

QL"C"/"D"
- TOWN OF ADDISON — TS1

POTABLE WATER — **QL"B"**
- TOWN OF ADDISON — W1

QL"C"/"D"
- TOWN OF ADDISON — W1

SANITARY SEWER — **QL"B"**
- TOWN OF ADDISON — WW1

QL"C"/"D"
- TOWN OF ADDISON — WW1

STORM DRAIN — **QL"B"**
- TOWN OF ADDISON — SD1

QL"C"/"D"
- TOWN OF ADDISON — SD1

ABANDONED UTILITY
UNKNOWN UTILITY

LEGEND OF UTILITY SYMBOLS

END CAP
QUALITY LEVEL CHANGE
TEST HOLE
UTILITY CONTINUATION

CATV CABINET
CATV HANDHOLE
CATV PEDESTAL

FIBER CABINET
FIBER HANDHOLE
FIBER PEDESTAL
TELEPHONE CABINET
TELEPHONE HANDHOLE (VAULT)
TELEPHONE MANHOLE
TELEPHONE PEDESTAL
TELEPHONE POLE
TELEPHONE POLE W/RISER

ELECTRIC GROUND LIGHT
ELECTRIC HANDHOLE
ELECTRIC JUNCTION BOX (CABINET)
ELECTRIC MANHOLE
ELECTRIC METER
ELECTRIC POLE (POWER)
ELECTRIC POLE W/RISER
LIGHT POLE
TRANSMISSION POLE

SIGNAL HANDHOLE/BOX
SIGNAL POLE

GAS MANHOLE
GAS METER
GAS TEST STATION
GAS VALVE
GAS VENT PIPE (GAS RISER)

STORM SEWER INLET
STORM SEWER MANHOLE
STORM SEWER OUTFALL

WASTE WATER CLEANOUT
WASTE WATER MANHOLE

FIRE HYDRANT
WATER MANHOLE
WATER METER
WATER VALVE
WATER VAULT

811 Know what's below. Call before you dig.

No.	REVISIONS	DATE	BY

PROJECT NO. XXXXX/ BID NO. XXXX-XXX

Kimley»Horn
225 E. JOHN W. CARPENTER FREEWAY SUITE 1100
IRVING, TX 75062
PHONE: 214-369-6500
WWW.KIMLEY-HORN.COM
© 2026 KIMLEY-HORN AND ASSOCIATES, INC.
TEXAS REGISTERED ENGINEERING FIRM #F-928

The Rios Group, Inc. TBPE #F-23495 TBPLS #10194495 CAITLIN A. BROWN 142519 REGISTERED PROFESSIONAL ENGINEER
08-07-2026

KHA PROJECT 063543066
DATE
SCALE AS SHOWN
DESIGNED BY CBB
DRAWN BY MTD
CHECKED BY CBB

CITY OF ADDISON
ADDISON JUNCTION DEVELOPMENT
PUBLIC INFRASTRUCTURE IMPROVEMENTS

THE RIOS GROUP
SUBSURFACE UTILITY ENGINEERING
UTILITY COORDINATION
7400 Sand Street
Fort Worth, Texas
817 345-7500

SHEET NUMBER
8

Plotted By: Michael Devlin August 07, 2026 12:22:27pm D:\Projects\KHA_26201.02 - Addison Circle Str\Civil\4_SUE Engr Services\Work in Progress\KHA_26201.02_SUE_WORKING.DWG
This document, together with the concepts and designs presented herein, as an instrument of service is intended only for the specific purpose and client for which it was prepared. Reuse of and improper reliance on this document without written authorization and adaptation by Kimley-Horn and Associates, Inc. shall be without liability to Kimley-Horn and Associates, Inc.

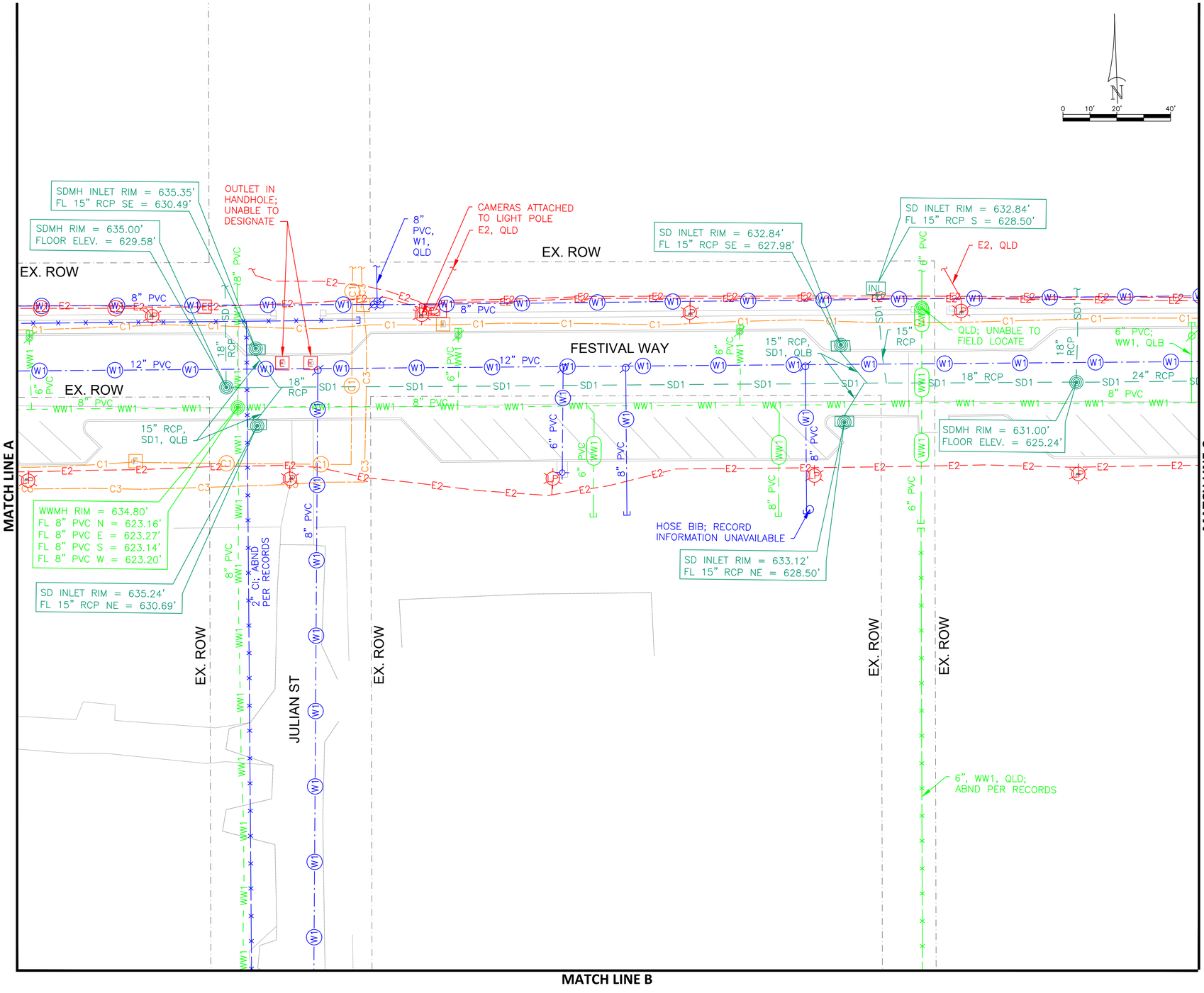

LEGEND OF U.G. UTILITY TYPES

COMMUNICATIONS — **QL"B"**
- AT&T (FO/DUCT)
- AT&T (TELE)
- SPECTRUM (FO/DUCT)
- SPECTRUM (CABLE)
- LOGIX (FO/DUCT)
- MCI (FO/DUCT)

QL"C"/"D"
- AT&T (FO/DUCT)
- AT&T (TELE)
- SPECTRUM (FO/DUCT)
- SPECTRUM (CABLE)
- LOGIX (FO/DUCT)
- MCI (FO/DUCT)

GAS / PETROLEUM — **QL"B"**
- ATMOS
- ATMOS

QL"C"/"D"

ELECTRIC / POWER — **QL"B"**
- ONCOR
- TOWN OF ADDISON
- AT&T

QL"C"/"D"
- ONCOR
- TOWN OF ADDISON
- AT&T

TRAFFIC SIGNAL — **QL"B"**
- TOWN OF ADDISON

QL"C"/"D"
- TOWN OF ADDISON

POTABLE WATER — **QL"B"**
- TOWN OF ADDISON

QL"C"/"D"
- TOWN OF ADDISON

SANITARY SEWER — **QL"B"**
- TOWN OF ADDISON

QL"C"/"D"
- TOWN OF ADDISON

STORM DRAIN — **QL"B"**
- TOWN OF ADDISON

QL"C"/"D"
- TOWN OF ADDISON

- ABANDONED UTILITY
- UNKNOWN UTILITY

LEGEND OF UTILITY SYMBOLS

- END CAP
- QUALITY LEVEL CHANGE
- TEST HOLE
- UTILITY CONTINUATION
- CATV CABINET
- CATV HANDHOLE
- CATV PEDESTAL
- FIBER CABINET
- FIBER HANDHOLE
- FIBER PEDESTAL
- TPHONE CABINET
- TELEPHONE HANDHOLE (VAULT)
- TELEPHONE MANHOLE
- TELEPHONE PEDESTAL
- TELEPHONE POLE
- TELEPHONE POLE W/RISER
- ELECTRIC GROUND LIGHT
- ELECTRIC HANDHOLE
- ELECTRIC JUNCTION BOX (CABINET)
- ELECTRIC MANHOLE
- ELECTRIC METER
- ELECTRIC POLE (POWER)
- ELECTRIC POLE W/RISER
- LIGHT POLE
- TRANSMISSION POLE
- SIGNAL HANDHOLE/BOX
- SIGNAL POLE
- GAS MANHOLE
- GAS METER
- GAS TEST STATION
- GAS VALVE
- GAS VENT PIPE (GAS RISER)
- STORM SEWER INLET
- STORM SEWER MANHOLE
- STORM SEWER OUTFALL
- WASTE WATER CLEANOUT
- WASTE WATER MANHOLE
- FIRE HYDRANT
- WATER MANHOLE
- WATER METER
- WATER VALVE
- WATER VAULT

Subsurface Utility Engineering (SUE) Certification

The engineer's seal hereon is to certify that the utilities shown have been investigated in accordance with standard SUE industry practices. Where indicated utility sizes and materials taken from best available records. All other information hereon has been provided by others and is not a part of this certification.

Know what's **below.** **Call** before you dig.

No.	REVISIONS	DATE	BY

PROJECT NO. XXXXX/ BID NO. XXXX-XXX

Kimley»Horn
225 E. JOHN W. CARPENTER FREEWAY SUITE 1100
IRVING, TX 75062
PHONE: 214-369-6500
WWW.KIMLEY-HORN.COM
© 2026 KIMLEY-HORN AND ASSOCIATES, INC.
TEXAS REGISTERED ENGINEERING FIRM #F-928

The Rios Group, Inc. TBPE #F-13455 — CATLIN A. RIOS 142919 — 08-07-2026

KHA PROJECT 063543066 | DATE | SCALE AS SHOWN | DESIGNED BY CBB | DRAWN BY MTD | CHECKED BY CBB

CITY OF ADDISON
ADDISON JUNCTION
DEVELOPMENT
PUBLIC INFRASTRUCTURE
IMPROVEMENTS

THE RIOS GROUP
SUBSURFACE UTILITY ENGINEERING
UTILITY COORDINATION
7400 Sand Street
Fort Worth, Texas 76118
817.349.7500

SHEET NUMBER
9

Plotted By: Michael Devlin November 05, 2026 10:01:43am R:\Projects\KHA_2620.00-Addison Circle Station-SUE-WORKING.DWG
This document, together with the concepts and designs presented herein, as an instrument of service, is intended only for the specific purpose and client for which it was prepared. Reuse of and improper reliance on this document without written authorization and adaptation by Kimley-Horn and Associates, Inc. shall be without liability to Kimley-Horn and Associates, Inc.

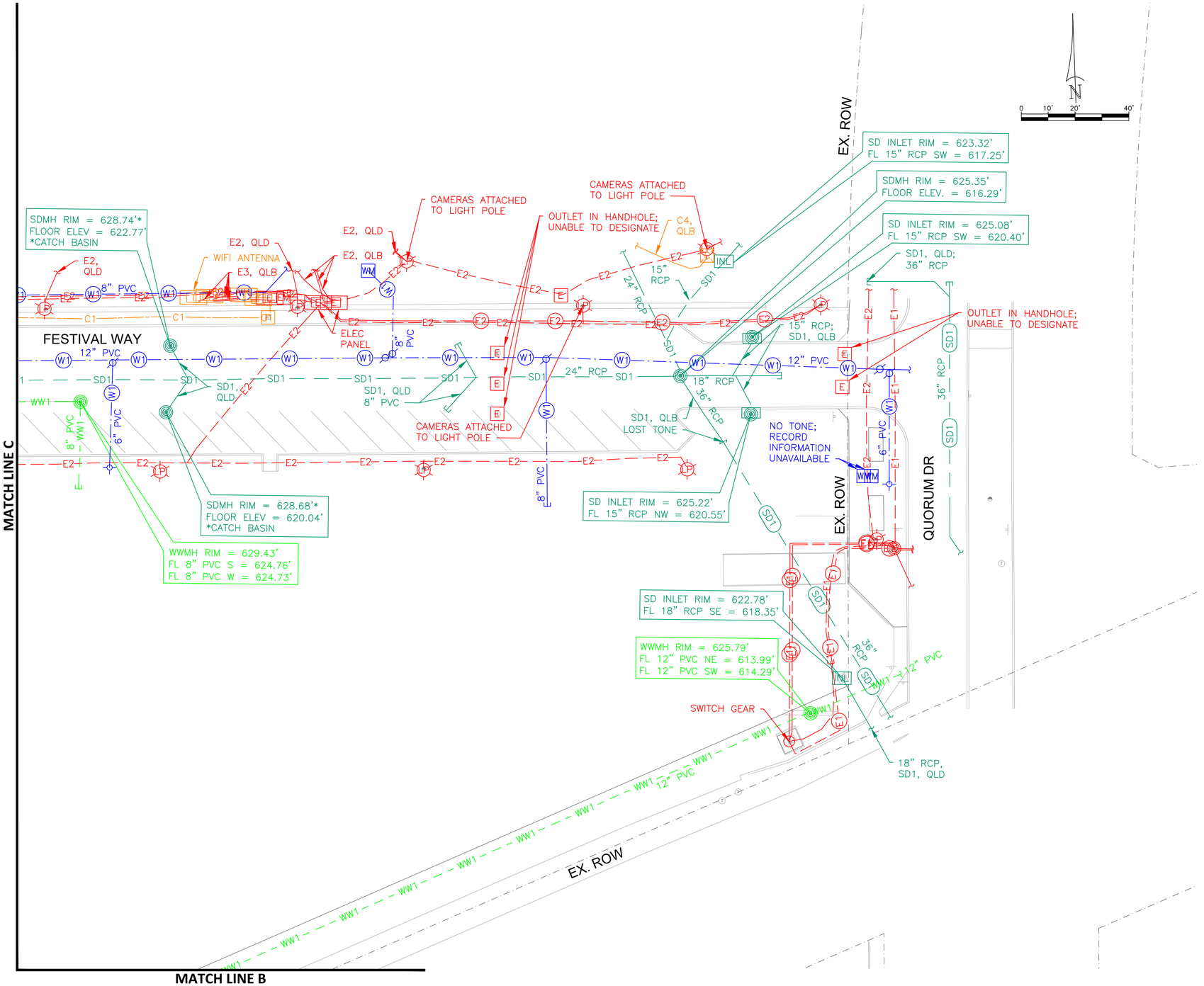

LEGEND OF U.G. UTILITY TYPES

COMMUNICATIONS — **QL"B"**
- AT&T (FO/DUCT)
- AT&T (TELE)
- SPECTRUM (FO/DUCT)
- SPECTRUM (CABLE)
- LOGIX (FO/DUCT)
- MCI (FO/DUCT)

QL"C"/"D"
- AT&T (FO/DUCT)
- AT&T (TELE)
- SPECTRUM (FO/DUCT)
- SPECTRUM (CABLE)
- LOGIX (FO/DUCT)
- MCI (FO/DUCT)

GAS / PETROLEUM — **QL"B"**
- ATMOS

QL"C"/"D"
- ATMOS

ELECTRIC / POWER — **QL"B"**
- ONCOR
- TOWN OF ADDISON
- AT&T

QL"C"/"D"
- ONCOR
- TOWN OF ADDISON
- AT&T

TRAFFIC SIGNAL — **QL"B"**
- TOWN OF ADDISON

QL"C"/"D"
- TOWN OF ADDISON

POTABLE WATER — **QL"B"**
- TOWN OF ADDISON

QL"C"/"D"
- TOWN OF ADDISON

SANITARY SEWER — **QL"B"**
- TOWN OF ADDISON

QL"C"/"D"
- TOWN OF ADDISON

STORM DRAIN — **QL"B"**
- TOWN OF ADDISON

QL"C"/"D"
- TOWN OF ADDISON

- ABANDONED UTILITY
- UNKNOWN UTILITY

LEGEND OF UTILITY SYMBOLS

- END CAP
- QUALITY LEVEL CHANGE
- TEST HOLE
- UTILITY CONTINUATION
- CATV CABINET
- CATV HANDHOLE
- CATV PEDESTAL
- FIBER CABINET
- FIBER HANDHOLE
- FIBER PEDESTAL
- TELEPHONE CABINET
- TELEPHONE HANDHOLE (VAULT)
- TELEPHONE MANHOLE
- TELEPHONE PEDESTAL
- TELEPHONE POLE
- TELEPHONE POLE W/RISER
- ELECTRIC GROUND LIGHT
- ELECTRIC HANDHOLE
- ELECTRIC JUNCTION BOX (CABINET)
- ELECTRIC MANHOLE
- ELECTRIC METER
- ELECTRIC POLE (POWER)
- ELECTRIC POLE W/RISER
- LIGHT POLE
- TRANSMISSION POLE
- SIGNAL HANDHOLE/BOX
- SIGNAL POLE
- GAS MANHOLE
- GAS METER
- GAS TEST STATION
- GAS VALVE
- GAS VENT PIPE (GAS RISER)
- STORM SEWER INLET
- STORM SEWER MANHOLE
- STORM SEWER OUTFALL
- WASTE WATER CLEANOUT
- WASTE WATER MANHOLE
- FIRE HYDRANT
- WATER MANHOLE
- WATER METER
- WATER VALVE
- WATER VAULT

Subsurface Utility Engineering (SUE) Certification

The engineer's seal hereon is to certify that the utilities shown have been investigated in accordance with standard SUE industry practices. Where indicated utility sizes and materials taken from best available records. All other information hereon has been provided by others and is not a part of this certification.

811 Know what's below. Call before you dig.

No.	REVISIONS	DATE	BY

PROJECT NO. XXXXX/ BID NO. XXXX-XXX

Kimley»Horn
225 E. JOHN W. CARPENTER FREEWAY SUITE 1100
IRVING, TX 75062
PHONE: 214-369-2300
WWW.KIMLEY-HORN.COM
© 2026 KIMLEY-HORN AND ASSOCIATES, INC.
TEXAS REGISTERED ENGINEERING FIRM #F-928

The Rios Group, Inc. TBPE Firm # 14485 — Registered Professional Engineer — Gustavo Rios — 142519 — 11-05-2026

KHA PROJECT 063543066 | DATE | SCALE AS SHOWN | DESIGNED BY CBB | DRAWN BY MTD | CHECKED BY CBB

CITY OF ADDISON
ADDISON JUNCTION DEVELOPMENT
PUBLIC INFRASTRUCTURE IMPROVEMENTS

THE RIOS GROUP
SUBSURFACE UTILITY ENGINEERING & UTILITY COORDINATION
7400 Sand Street, Fort Worth, Texas 76118, 817.247.7500

SHEET NUMBER
10

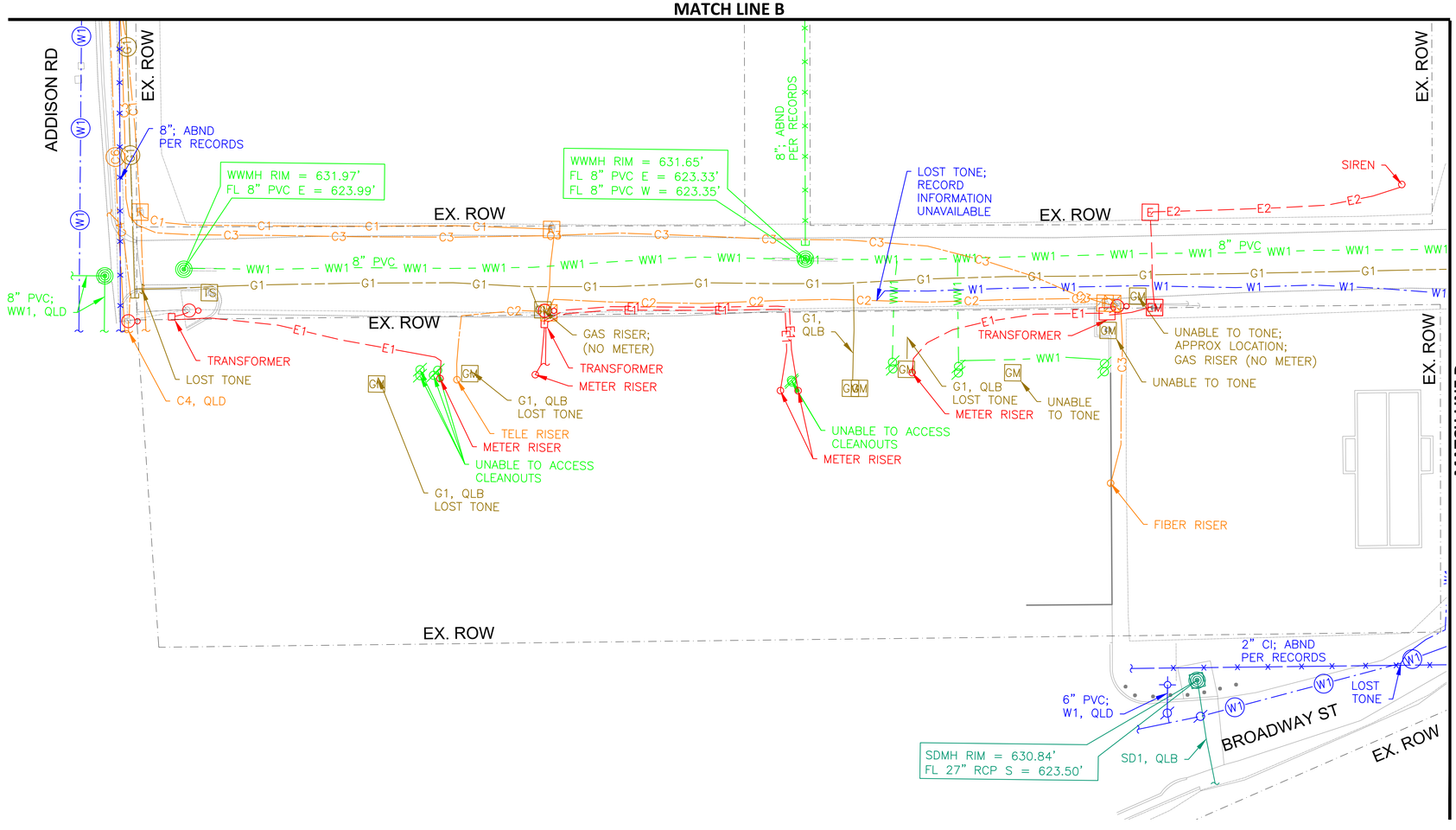

LEGEND OF U.G. UTILITY TYPES

COMMUNICATIONS — **QL"B"**
- AT&T (FO/DUCT)
- AT&T (TELE)
- SPECTRUM (FO/DUCT)
- SPECTRUM (CABLE)
- LOGIX (FO/DUCT)
- MCI (FO/DUCT)

QL"C"/"D"
- AT&T (FO/DUCT)
- AT&T (TELE)
- SPECTRUM (FO/DUCT)
- SPECTRUM (CABLE)
- LOGIX (FO/DUCT)
- MCI (FO/DUCT)

GAS / PETROLEUM — **QL"B"**
- ATMOS

QL"C"/"D"
- ATMOS

ELECTRIC / POWER — **QL"B"**
- ONCOR
- TOWN OF ADDISON
- AT&T

QL"C"/"D"
- ONCOR
- TOWN OF ADDISON
- AT&T

TRAFFIC SIGNAL — **QL"B"**
- TOWN OF ADDISON

QL"C"/"D"
- TOWN OF ADDISON

POTABLE WATER — **QL"B"**
- TOWN OF ADDISON

QL"C"/"D"
- TOWN OF ADDISON

SANITARY SEWER — **QL"B"**
- TOWN OF ADDISON

QL"C"/"D"
- TOWN OF ADDISON

STORM DRAIN — **QL"B"**
- TOWN OF ADDISON

QL"C"/"D"
- TOWN OF ADDISON

- ABANDONED UTILITY
- UNKNOWN UTILITY

LEGEND OF UTILITY SYMBOLS

- END CAP
- QUALITY LEVEL CHANGE
- TEST HOLE
- UTILITY CONTINUATION
- CATV CABINET
- CATV HANDHOLE
- CATV PEDESTAL
- FIBER CABINET
- FIBER HANDHOLE
- FIBER PEDESTAL
- TELEPHONE CABINET
- TELEPHONE HANDHOLE (VAULT)
- TELEPHONE MANHOLE
- TELEPHONE PEDESTAL
- TELEPHONE POLE
- TELEPHONE POLE W/RISER
- ELECTRIC GROUND LIGHT
- ELECTRIC HANDHOLE
- ELECTRIC JUNCTION BOX (CABINET)
- ELECTRIC MANHOLE
- ELECTRIC METER
- ELECTRIC POLE (POWER)
- ELECTRIC POLE W/RISER
- LIGHT POLE
- TRANSMISSION POLE
- SIGNAL HANDHOLE/BOX
- SIGNAL POLE
- GAS MANHOLE
- GAS METER
- GAS TEST STATION
- GAS VALVE
- GAS VENT PIPE (GAS RISER)
- STORM SEWER INLET
- STORM SEWER MANHOLE
- STORM SEWER OUTFALL
- WASTE WATER CLEANOUT
- WASTE WATER MANHOLE
- FIRE HYDRANT
- WATER MANHOLE
- WATER METER
- WATER VALVE
- WATER VAULT

Subsurface Utility Engineering (SUE) Certification

The engineer's seal hereon is to certify that the utilities shown have been investigated in accordance with standard SUE industry practices. Where indicated utility sizes and materials taken from best available records. All other information hereon has been provided by others and is not a part of this certification.

Know what's **below.** **Call** before you dig.

PROJECT NO. XXXXX/ BID NO. XXXX-XXX

No.	REVISIONS	DATE	BY

Kimley»Horn
225 E. JOHN W. CARPENTER FREEWAY SUITE 1100
IRVING, TX 75062
PHONE: 214-565-0660
WWW.KIMLEY-HORN.COM
© 2026 KIMLEY-HORN AND ASSOCIATES, INC.
TEXAS REGISTERED ENGINEERING FIRM #F-928

The Rios Group, Inc. TBPE FIRM #F-14465 TBPLS FIRM #10194465 CATCLAIR A. BROWN 142510 REGISTERED PROFESSIONAL ENGINEER
08-07-2026

KHA PROJECT 063543066

DATE		
SCALE	AS SHOWN	
DESIGNED BY	CBB	
DRAWN BY	MTD	
CHECKED BY	CBB	

CITY OF ADDISON
ADDISON JUNCTION DEVELOPMENT
PUBLIC INFRASTRUCTURE IMPROVEMENTS

THE RIOS GROUP
SUBSURFACE UTILITY ENGINEERING
UTILITY COORDINATION
7400 Sand Street
Fort Worth, Texas 76118
817.345.7300

SHEET NUMBER
11

Plotted By: Michael Orvin August 07, 2026 12:22:39pm R:\Projects\KHA_062543.00 - Addison Circle Style\4_SUE Survey Services\Work in Progress\KHA_062543.00-Addison Circle Style_SUE_WORKING.DWG
This document, together with the concepts and designs presented herein, as an instrument of service is intended only for the specific purpose and client for which it was prepared. Reuse of and improper reliance on this document without written authorization and adaptation by Kimley-Horn and Associates, Inc. shall be without liability to Kimley-Horn and Associates, Inc.

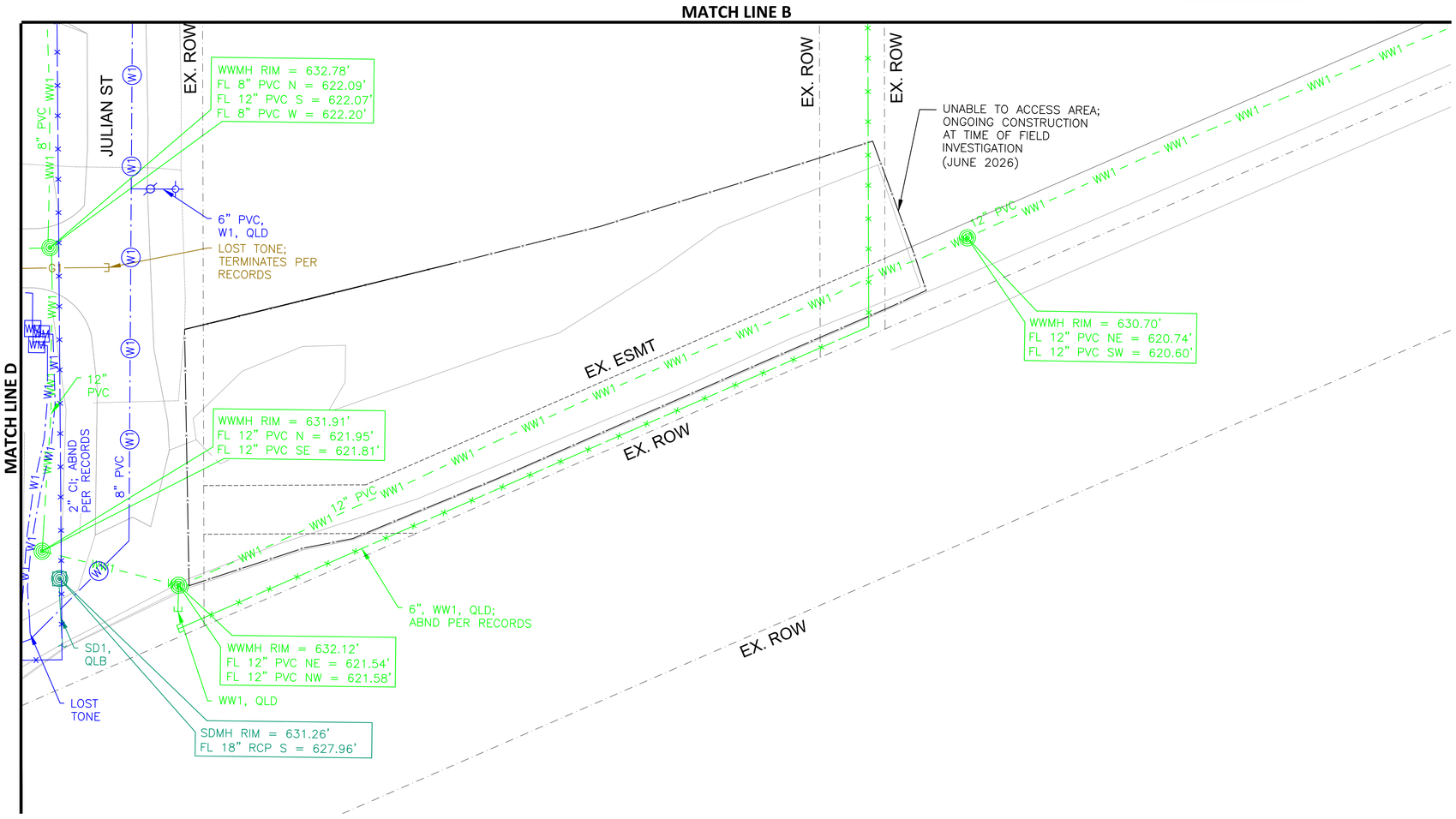

LEGEND OF U.G. UTILITY TYPES

COMMUNICATIONS — **QL"B"**
- AT&T (FO/DUCT) — C1
- AT&T (TELE) — C2
- SPECTRUM (FO/DUCT) — C3
- SPECTRUM (CABLE) — C4
- LOGIX (FO/DUCT) — C5
- MCI (FO/DUCT) — C6

QL"C"/"D"
- AT&T (FO/DUCT) — C1
- AT&T (TELE) — C2
- SPECTRUM (FO/DUCT) — C3
- SPECTRUM (CABLE) — C4
- LOGIX (FO/DUCT) — C5
- MCI (FO/DUCT) — C6

GAS / PETROLEUM — **QL"B"**
- ATMOS — G1

QL"C"/"D"
- ATMOS — G1

ELECTRIC / POWER — **QL"B"**
- ONCOR — E1
- TOWN OF ADDISON — E2
- AT&T — E3

QL"C"/"D"
- ONCOR — E1
- TOWN OF ADDISON — E2
- AT&T — E3

TRAFFIC SIGNAL — **QL"B"**
- TOWN OF ADDISON — TS1

QL"C"/"D"
- TOWN OF ADDISON — TS1

POTABLE WATER — **QL"B"**
- TOWN OF ADDISON — W1

QL"C"/"D"
- TOWN OF ADDISON — W1

SANITARY SEWER — **QL"B"**
- TOWN OF ADDISON — WW1

QL"C"/"D"
- TOWN OF ADDISON — WW1

STORM DRAIN — **QL"B"**
- TOWN OF ADDISON — SD1

QL"C"/"D"
- TOWN OF ADDISON — SD1

ABANDONED UTILITY
UNKNOWN UTILITY

LEGEND OF UTILITY SYMBOLS

END CAP
QUALITY LEVEL CHANGE
TEST HOLE
UTILITY CONTINUATION

CATV CABINET
CATV HANDHOLE
CATV PEDESTAL

FIBER CABINET
FIBER HANDHOLE
FIBER PEDESTAL
TELEPHONE CABINET
TELEPHONE HANDHOLE (VAULT)
TELEPHONE MANHOLE
TELEPHONE PEDESTAL
TELEPHONE POLE
TELEPHONE POLE W/RISER

ELECTRIC GROUND LIGHT
ELECTRIC HANDHOLE
ELECTRIC JUNCTION BOX (CABINET)
ELECTRIC MANHOLE
ELECTRIC METER
ELECTRIC POLE (POWER)
ELECTRIC POLE W/RISER
LIGHT POLE
TRANSMISSION POLE

SIGNAL HANDHOLE/BOX
SIGNAL POLE

GAS MANHOLE
GAS METER
GAS TEST STATION
GAS VALVE
GAS VENT PIPE (GAS RISER)

STORM SEWER INLET
STORM SEWER MANHOLE
STORM SEWER OUTFALL

WASTE WATER CLEANOUT
WASTE WATER MANHOLE

FIRE HYDRANT
WATER MANHOLE
WATER METER
WATER VALVE
WATER VAULT

811 Know what's below. Call before you dig.

Subsurface Utility Engineering (SUE) Certification

The engineer's seal hereon is to certify that the utilities shown have been investigated in accordance with standard SUE industry practices. Where indicated utility sizes and materials taken from best available records. All other information hereon has been provided by others and is not a part of this certification.

Kimley»Horn
225 E. JOHN W. CARPENTER FREEWAY SUITE 1100
IRVING, TX 75062
PHONE: 214.565.0660
WWW.KIMLEY-HORN.COM

© 2026 KIMLEY-HORN AND ASSOCIATES, INC.

TEXAS REGISTERED ENGINEERING FIRM #F-928

The Rios Group, Inc. TBPELS #F-23455
CAITLIN B. BROWN 142519 LICENSED PROFESSIONAL ENGINEER
08-07-2026

No.	REVISIONS	DATE	BY

PROJECT NO. XXXXX/ BID NO. XXXX-XXX

KHA PROJECT 063543066
DATE
SCALE AS SHOWN
DESIGNED BY CBB
DRAWN BY MTD
CHECKED BY CBB

CITY OF ADDISON
ADDISON JUNCTION
DEVELOPMENT
PUBLIC INFRASTRUCTURE
IMPROVEMENTS

THE RIOS GROUP
SUBSURFACE UTILITY ENGINEERING
UTILITY COORDINATION
7400 Sand Street
Fort Worth, Texas 76118
817.242.7500

SHEET NUMBER
12

Plotted By: Michael Devlin August 07, 2026 12:22:42pm R:\Projects\KHA_063543066_Addison Circle Station\4_SUE Group Services\Work In Progress\KHA_063543066_Addison Circle Station_SUE_WORKING.DWG
This document, together with the concepts and designs presented herein, as an instrument of service is intended only for the specific purpose and client for which it was prepared. Reuse of and improper reliance on this document without written authorization and adaptation by Kimley-Horn and Associates, Inc. shall be without liability to Kimley-Horn and Associates, Inc.

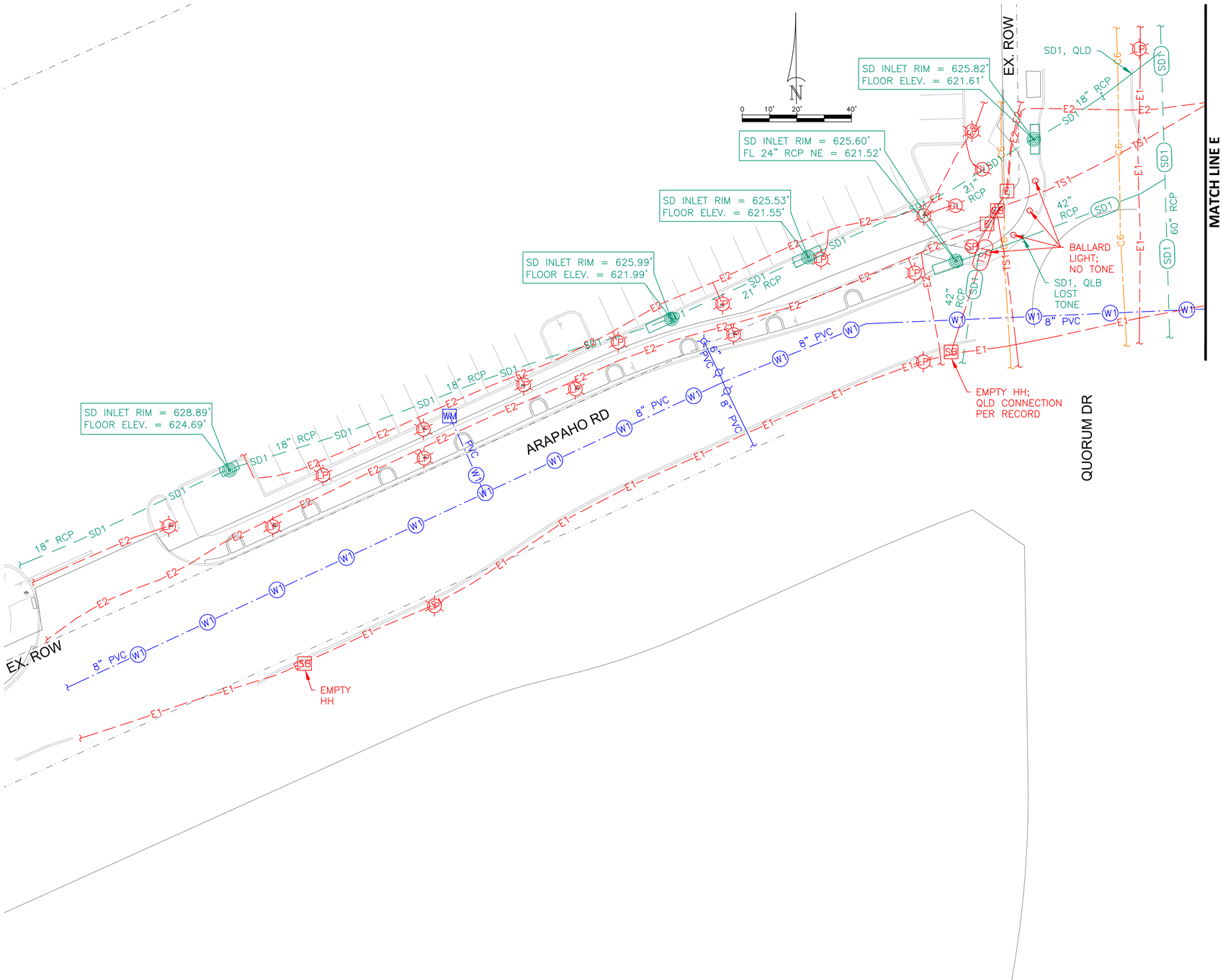

Subsurface Utility Engineering (SUE) Certification

The engineer's seal hereon is to certify that the utilities shown have been investigated in accordance with standard SUE industry practices. Where indicated utility sizes and materials taken from best available records. All other information hereon has been provided by others and is not a part of this certification.

LEGEND OF U.G. UTILITY TYPES

COMMUNICATIONS — **QL"B"**
- AT&T (FO/DUCT)
- AT&T (TELE)
- SPECTRUM (FO/DUCT)
- SPECTRUM (CABLE)
- LOGIX (FO/DUCT)
- MCI (FO/DUCT)

QL"C"/"D"
- AT&T (FO/DUCT)
- AT&T (TELE)
- SPECTRUM (FO/DUCT)
- SPECTRUM (CABLE)
- LOGIX (FO/DUCT)
- MCI (FO/DUCT)

GAS / PETROLEUM — **QL"B"**
- ATMOS

QL"C"/"D"
- ATMOS

ELECTRIC / POWER — **QL"B"**
- ONCOR
- TOWN OF ADDISON
- AT&T

QL"C"/"D"
- ONCOR
- TOWN OF ADDISON
- AT&T

TRAFFIC SIGNAL — **QL"B"**
- TOWN OF ADDISON

QL"C"/"D"
- TOWN OF ADDISON

POTABLE WATER — **QL"B"**
- TOWN OF ADDISON

QL"C"/"D"
- TOWN OF ADDISON

SANITARY SEWER — **QL"B"**
- TOWN OF ADDISON

QL"C"/"D"
- TOWN OF ADDISON

STORM DRAIN — **QL"B"**
- TOWN OF ADDISON

QL"C"/"D"
- TOWN OF ADDISON

- ABANDONED UTILITY
- UNKNOWN UTILITY

LEGEND OF UTILITY SYMBOLS

- END CAP
- QUALITY LEVEL CHANGE
- TEST HOLE
- UTILITY CONTINUATION
- CATV CABINET
- CATV HANDHOLE
- CATV PEDESTAL
- FIBER CABINET
- FIBER HANDHOLE
- FIBER PEDESTAL
- TELEPHONE CABINET
- TELEPHONE HANDHOLE (VAULT)
- TELEPHONE MANHOLE
- TELEPHONE PEDESTAL
- TELEPHONE POLE
- TELEPHONE POLE W/RISER
- ELECTRIC GROUND LIGHT
- ELECTRIC HANDHOLE
- ELECTRIC JUNCTION BOX (CABINET)
- ELECTRIC MANHOLE
- ELECTRIC METER
- ELECTRIC POLE (POWER)
- ELECTRIC POLE W/RISER
- LIGHT POLE
- TRANSMISSION POLE
- SIGNAL HANDHOLE/BOX
- SIGNAL POLE
- GAS MANHOLE
- GAS METER
- GAS TEST STATION
- GAS VALVE
- GAS VENT PIPE (GAS RISER)
- STORM SEWER INLET
- STORM SEWER MANHOLE
- STORM SEWER OUTFALL
- WASTE WATER CLEANOUT
- WASTE WATER MANHOLE
- FIRE HYDRANT
- WATER MANHOLE
- WATER METER
- WATER VALVE
- WATER VAULT

811 Know what's **below.** **Call** before you dig.

No.	REVISIONS	DATE	BY

PROJECT NO. XXXXX/ BID NO. XXXX-XXX

Kimley»Horn
225 E. JOHN W. CARPENTER FREEWAY SUITE 1100
IRVING, TX 75062
PHONE: 214-565-0600
WWW.KIMLEY-HORN.COM

© 2026 KIMLEY-HORN AND ASSOCIATES, INC.
TEXAS REGISTERED ENGINEERING FIRM #F-928

The Rios Group, Inc. TBPELS Firm #10194485 — CASSIDY L. RIOS 142519 — REGISTERED — 08-07-2026

KHA PROJECT 063543066

DATE			
SCALE	AS SHOWN	DESIGNED BY	CBB
		DRAWN BY	MTD
		CHECKED BY	CBB

CITY OF ADDISON
ADDISON JUNCTION DEVELOPMENT
PUBLIC INFRASTRUCTURE IMPROVEMENTS

THE RIOS GROUP
SUBSURFACE UTILITY ENGINEERING
UTILITY COORDINATION
1400 Sand Street
Fort Worth, TX 76106
817.247.7200

SHEET NUMBER
13

Plotted By: Michael Carlin August 07, 2026 12:22:47pm R:\Projects\KHA_262000_02 - Addison Circle Style\14_SUE Survey Services\Work In Progress\KHA_262000_02-Addison Circle Style_SUE_WORKING.DWG
This document, together with the concepts and designs presented herein, as an instrument of service, is intended only for the specific purpose and client for which it was prepared. Reuse of and improper reliance on this document without written authorization and adaptation by Kimley-Horn and Associates, Inc. shall be without liability to Kimley-Horn and Associates, Inc.

Plotted By: Michael Durbin August 07, 2026 10:22:52am R:\Projects\KHA_2620.00 - Addison Circle Study\04_SUE Survey Services\Work In Progress\KHA_2620.00-Addison Circle Study_SUE_WORKING.DWG
This document, together with the concepts and designs presented herein, as an instrument of service, is intended only for the specific purpose and client for which it was prepared. Reuse of and improper reliance on this document without written authorization and adaptation by Kimley-Horn and Associates, Inc. shall be without liability to Kimley-Horn and Associates, Inc.

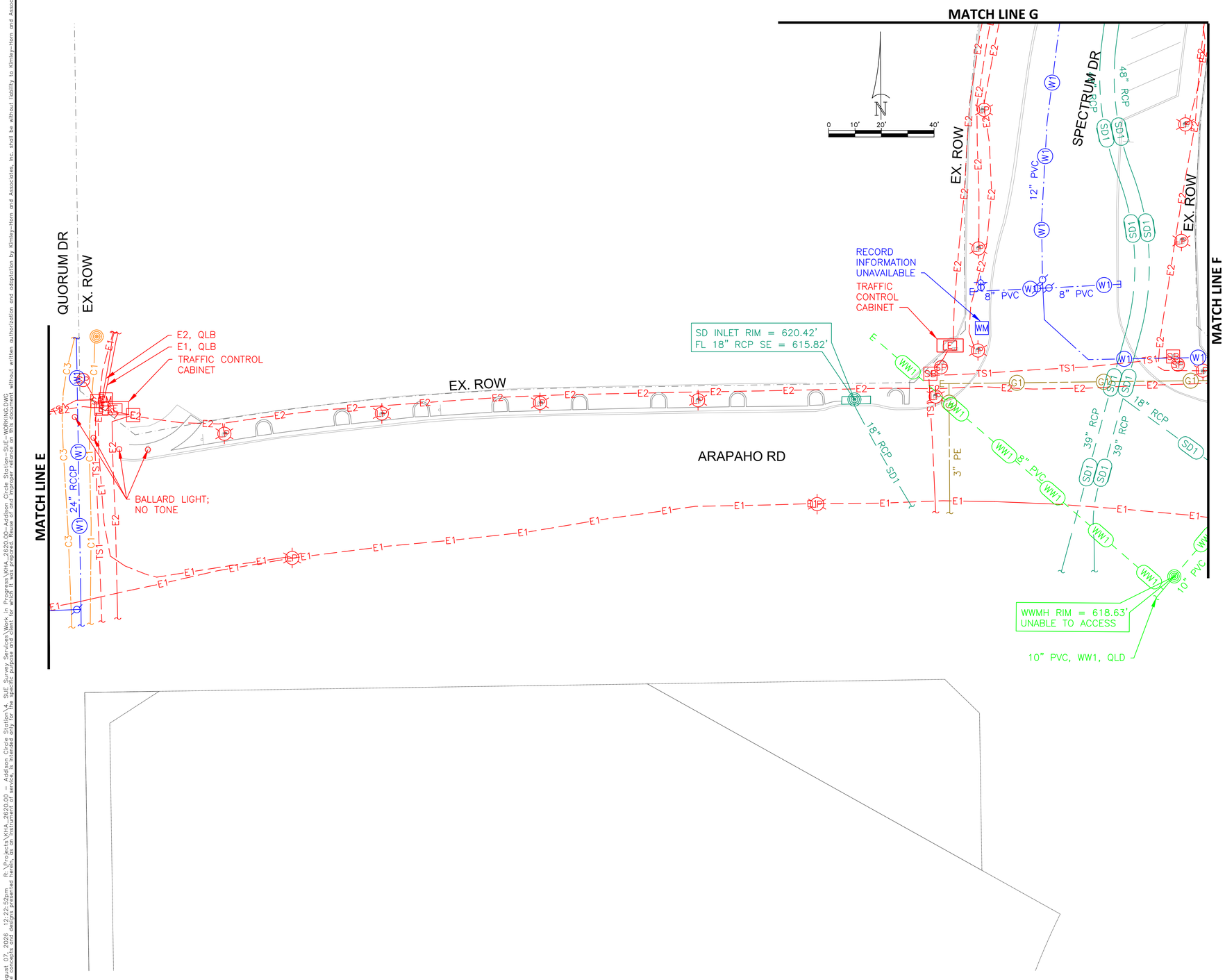

Subsurface Utility Engineering (SUE) Certification

The engineer's seal hereon is to certify that the utilities shown have been investigated in accordance with standard SUE industry practices. Where indicated utility sizes and materials taken from best available records. All other information hereon has been provided by others and is not a part of this certification.

LEGEND OF U.G. UTILITY TYPES

COMMUNICATIONS — **QL"B"**
- AT&T (FO/DUCT) — C1
- AT&T (TELE) — C2
- SPECTRUM (FO/DUCT) — C3
- SPECTRUM (CABLE) — C4
- LOGIX (FO/DUCT) — C5
- MCI (FO/DUCT) — C6

QL"C"/"D"
- AT&T (FO/DUCT) — C1
- AT&T (TELE) — C2
- SPECTRUM (FO/DUCT) — C3
- SPECTRUM (CABLE) — C4
- LOGIX (FO/DUCT) — C5
- MCI (FO/DUCT) — C6

GAS / PETROLEUM — **QL"B"**
- ATMOS — G1

QL"C"/"D"
- ATMOS — G1

ELECTRIC / POWER — **QL"B"**
- ONCOR — E1
- TOWN OF ADDISON — E2
- AT&T — E3

QL"C"/"D"
- ONCOR — E1
- TOWN OF ADDISON — E2
- AT&T — E3

TRAFFIC SIGNAL — **QL"B"**
- TOWN OF ADDISON — TS1

QL"C"/"D"
- TOWN OF ADDISON — TS1

POTABLE WATER — **QL"B"**
- TOWN OF ADDISON — W1

QL"C"/"D"
- TOWN OF ADDISON — W1

SANITARY SEWER — **QL"B"**
- TOWN OF ADDISON — WW1

QL"C"/"D"
- TOWN OF ADDISON — WW1

STORM DRAIN — **QL"B"**
- TOWN OF ADDISON — SD1

QL"C"/"D"
- TOWN OF ADDISON — SD1

- ABANDONED UTILITY
- UNKNOWN UTILITY

LEGEND OF UTILITY SYMBOLS

- END CAP
- QUALITY LEVEL CHANGE
- TEST HOLE
- UTILITY CONTINUATION
- CATV CABINET
- CATV HANDHOLE
- CATV PEDESTAL
- FIBER CABINET
- FIBER HANDHOLE
- FIBER PEDESTAL
- TELEPHONE CABINET
- TELEPHONE HANDHOLE (VAULT)
- TELEPHONE MANHOLE
- TELEPHONE PEDESTAL
- TELEPHONE POLE
- TELEPHONE POLE W/RISER
- ELECTRIC GROUND LIGHT
- ELECTRIC HANDHOLE
- ELECTRIC JUNCTION BOX (CABINET)
- ELECTRIC MANHOLE
- ELECTRIC METER
- ELECTRIC POLE (POWER)
- ELECTRIC POLE W/RISER
- LIGHT POLE
- TRANSMISSION POLE
- SIGNAL HANDHOLE/BOX
- SIGNAL POLE
- GAS MANHOLE
- GAS METER
- GAS TEST STATION
- GAS VALVE
- GAS VENT PIPE (GAS RISER)
- STORM SEWER INLET
- STORM SEWER MANHOLE
- STORM SEWER OUTFALL
- WASTE WATER CLEANOUT
- WASTE WATER MANHOLE
- FIRE HYDRANT
- WATER MANHOLE
- WATER METER
- WATER VALVE
- WATER VAULT

811 Know what's below. Call before you dig.

No.	REVISIONS	DATE	BY

PROJECT NO. XXXXX/ BID NO. XXXX-XXX

Kimley»Horn
225 E. JOHN W. CARPENTER FREEWAY SUITE 1100
IRVING, TX 75062
PHONE: 214.369.6500
WWW.KIMLEY-HORN.COM
© 2026 KIMLEY-HORN AND ASSOCIATES, INC.
TEXAS REGISTERED ENGINEERING FIRM #F-928

The Rios Group, Inc. TBPELS #F-23455
CAITLIN B. BROWN 142519 LICENSED PROFESSIONAL ENGINEER
08-07-2026

KHA PROJECT 063543066
DATE
SCALE AS SHOWN
DESIGNED BY CBB
DRAWN BY MTD
CHECKED BY CBB

CITY OF ADDISON
ADDISON JUNCTION DEVELOPMENT
PUBLIC INFRASTRUCTURE IMPROVEMENTS

THE RIOS GROUP
SUBSURFACE UTILITY ENGINEERING
UTILITY COORDINATION
7400 Sand Street
Fort Worth, Texas 76118
817.345.7300

SHEET NUMBER
14

Plotted By:Michael Devlin August 07, 2026 12:22:58pm R:\Projects\KHA_2620.02 - Addison Circle Study\4_SUE Group Services\Work In Progress\KHA_2620.02c-Addison Circle Study-SUE-WORKING.DWG
This document, together with the concepts and designs presented herein, as an instrument of service is intended only for the specific purpose and client for which it was prepared. Reuse of and improper reliance on this document without written authorization and adaptation by Kimley-Horn and Associates, Inc. shall be without liability to Kimley-Horn and Associates, Inc.

MATCH LINE G

MATCH LINE F

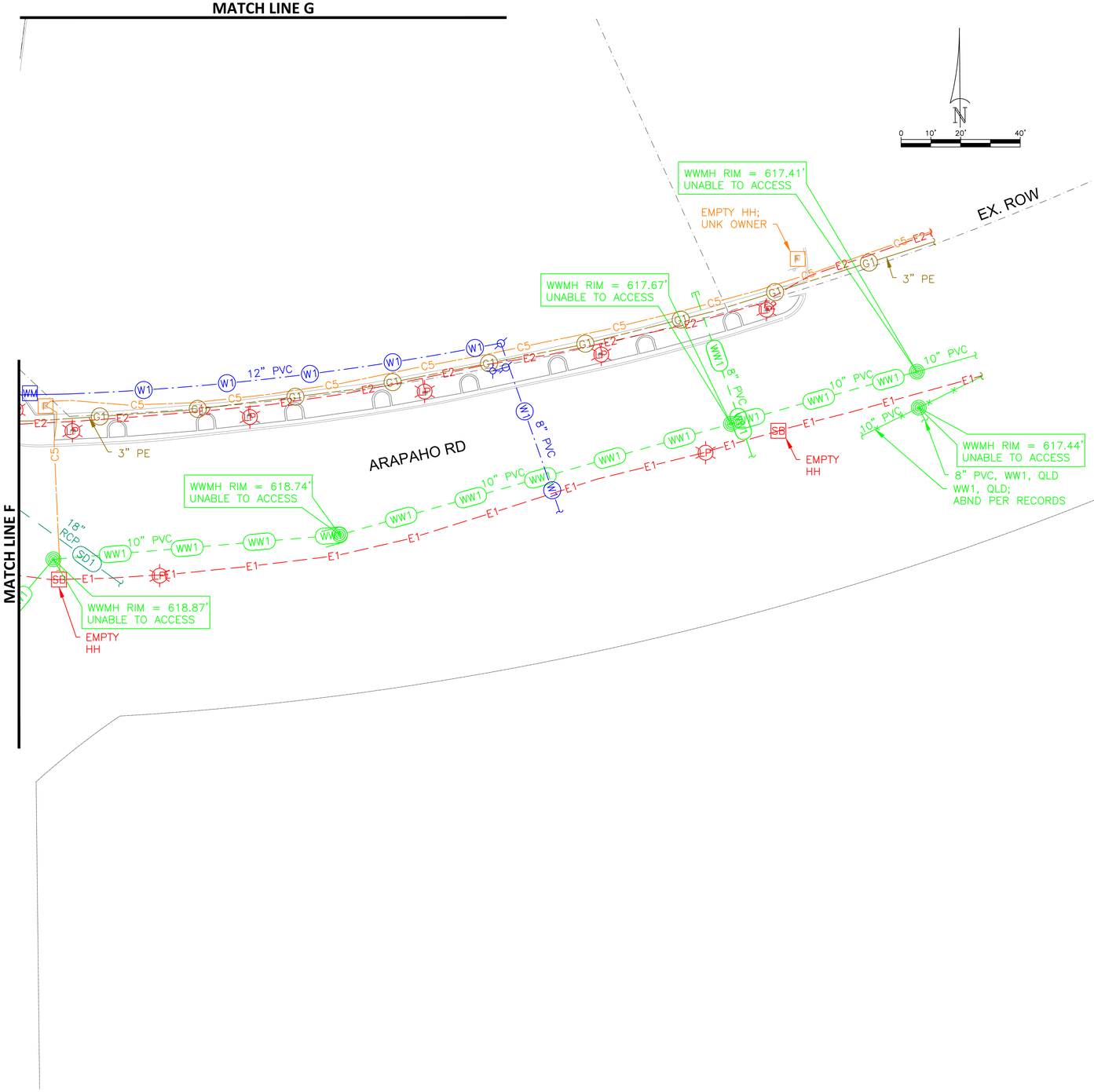

Subsurface Utility Engineering (SUE) Certification

The engineer's seal hereon is to certify that the utilities shown have been investigated in accordance with standard SUE industry practices. Where indicated utility sizes and materials taken from best available records. All other information hereon has been provided by others and is not a part of this certification.

LEGEND OF U.G. UTILITY TYPES

COMMUNICATIONS
AT&T (FO/DUCT)
AT&T (TELE)
SPECTRUM (FO/DUCT)
SPECTRUM (CABLE)
LOGIX (FO/DUCT)
MCI (FO/DUCT)

GAS / PETROLEUM
ATMOS
ATMOS

ELECTRIC / POWER
ONCOR
TOWN OF ADDISON
AT&T

TRAFFIC SIGNAL
TOWN OF ADDISON
TOWN OF ADDISON

POTABLE WATER
TOWN OF ADDISON
TOWN OF ADDISON

SANITARY SEWER
TOWN OF ADDISON
TOWN OF ADDISON

STORM DRAIN
TOWN OF ADDISON
TOWN OF ADDISON

ABANDONED UTILITY
UNKNOWN UTILITY

LEGEND OF UTILITY SYMBOLS

END CAP
QUALITY LEVEL CHANGE
TEST HOLE
UTILITY CONTINUATION

CATV CABINET
CATV HANDHOLE
CATV PEDESTAL

FIBER CABINET
FIBER HANDHOLE
FIBER PEDESTAL
TELEPHONE CABINET
TELEPHONE HANDHOLE (VAULT)
TELEPHONE MANHOLE
TELEPHONE PEDESTAL
TELEPHONE POLE
TELEPHONE POLE W/RISER

ELECTRIC GROUND LIGHT
ELECTRIC HANDHOLE
ELECTRIC JUNCTION BOX (CABINET)
ELECTRIC MANHOLE
ELECTRIC METER
ELECTRIC POLE (POWER)
ELECTRIC POLE W/RISER
LIGHT POLE
TRANSMISSION POLE

SIGNAL HANDHOLE/BOX
SIGNAL POLE

GAS MANHOLE
GAS METER
GAS TEST STATION
GAS VALVE
GAS VENT PIPE (GAS RISER)

STORM SEWER INLET
STORM SEWER MANHOLE
STORM SEWER OUTFALL

WASTE WATER CLEANOUT
WASTE WATER MANHOLE

FIRE HYDRANT
WATER MANHOLE
WATER METER
WATER VALVE
WATER VAULT

811 Know what's below. Call before you dig.

No.	REVISIONS	DATE	BY

PROJECT NO. XXXXX/ BID NO. XXXX-XXX

Kimley»Horn
225 E. JOHN W. CARPENTER FREEWAY SUITE 1100
IRVING, TX 75062
PHONE: 214.466.8000
WWW.KIMLEY-HORN.COM
© 2026 KIMLEY-HORN AND ASSOCIATES, INC.
TEXAS REGISTERED ENGINEERING FIRM #F-928

The Rios Group, Inc. TBPE FIRM #F-14455 — LICENSED PROFESSIONAL ENGINEER — CAITLIN B. BROWN — 142519 — 08-07-2026

KHA PROJECT 063543066 | DATE | SCALE AS SHOWN | DESIGNED BY CBB | DRAWN BY MTD | CHECKED BY CBB

CITY OF ADDISON
ADDISON JUNCTION
DEVELOPMENT
PUBLIC INFRASTRUCTURE
IMPROVEMENTS

THE RIOS GROUP
SUBSURFACE UTILITY ENGINEERING
UTILITY COORDINATION
7400 Sand Street
Fort Worth, Texas 76118
817.247.7500

SHEET NUMBER
15

Plotted By: Michael Coville August 07, 2026 12:23:04pm R:\Projects\KHA_2620.02-_Addison Circle Style\14_SUE_Survey Services\Work in Progress\KHA_2620.02-_Addison Circle Style_SUE_WORKING.DWG
This document, together with the concepts and designs presented herein, as an instrument of service is intended only for the specific purpose and client for which it was prepared. Reuse of and improper reliance on this document without written authorization and adaptation by Kimley-Horn and Associates, Inc. shall be without liability to Kimley-Horn and Associates, Inc.

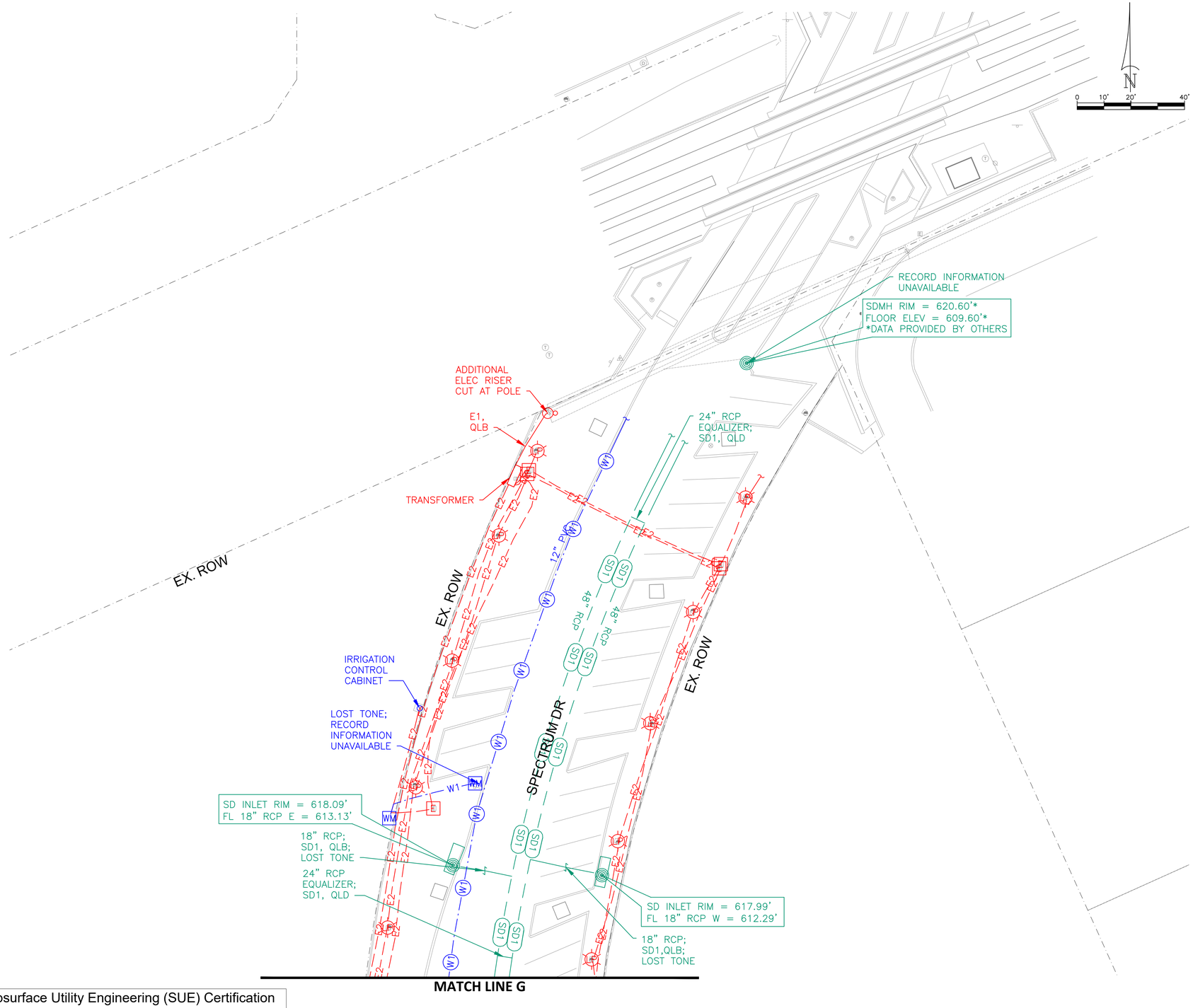

Subsurface Utility Engineering (SUE) Certification

The engineer's seal hereon is to certify that the utilities shown have been investigated in accordance with standard SUE industry practices. Where indicated utility sizes and materials taken from best available records. All other information hereon has been provided by others and is not a part of this certification.

LEGEND OF U.G. UTILITY TYPES

COMMUNICATIONS
AT&T (FO/DUCT)
AT&T (TELE)
SPECTRUM (FO/DUCT)
SPECTRUM (CABLE)
LOGIX (FO/DUCT)
MCI (FO/DUCT)

GAS / PETROLEUM
ATMOS

ELECTRIC / POWER
ONCOR
TOWN OF ADDISON
AT&T

TRAFFIC SIGNAL
TOWN OF ADDISON

POTABLE WATER
TOWN OF ADDISON

SANITARY SEWER
TOWN OF ADDISON

STORM DRAIN
TOWN OF ADDISON

ABANDONED UTILITY
UNKNOWN UTILITY

LEGEND OF UTILITY SYMBOLS

END CAP
QUALITY LEVEL CHANGE
TEST HOLE
UTILITY CONTINUATION

CATV CABINET
CATV HANDHOLE
CATV PEDESTAL

FIBER CABINET
FIBER HANDHOLE
FIBER PEDESTAL
TELEPHONE CABINET
TELEPHONE HANDHOLE (VAULT)
TELEPHONE MANHOLE
TELEPHONE PEDESTAL
TELEPHONE POLE
TELEPHONE POLE W/RISER

ELECTRIC GROUND LIGHT
ELECTRIC HANDHOLE
ELECTRIC JUNCTION BOX (CABINET)
ELECTRIC MANHOLE
ELECTRIC METER
ELECTRIC POLE (POWER)
ELECTRIC POLE W/RISER
LIGHT POLE
TRANSMISSION POLE

SIGNAL HANDHOLE/BOX
SIGNAL POLE

GAS MANHOLE
GAS METER
GAS TEST STATION
GAS VALVE
GAS VENT PIPE (GAS RISER)

STORM SEWER INLET
STORM SEWER MANHOLE
STORM SEWER OUTFALL

WASTE WATER CLEANOUT
WASTE WATER MANHOLE

FIRE HYDRANT
WATER MANHOLE
WATER METER
WATER VALVE
WATER VAULT

811 Know what's **below.** **Call** before you dig.

BY | DATE | REVISIONS | No.

PROJECT NO. XXXXX/ BID NO. XXXX-XXX

Kimley»Horn
225 E. JOHN W. CARPENTER FREEWAY SUITE 1100
IRVING, TX 75062
PHONE: 214.565.0660
WWW.KIMLEY-HORN.COM
© 2026 KIMLEY-HORN AND ASSOCIATES, INC.
TEXAS REGISTERED ENGINEERING FIRM #F-928

The Rios Group, Inc. TBPELS Firm #10194455 — Certificate of Registration — Christopher Rios — 142510 — Registered Professional Land Surveyor — State of Arizona
Coordinated 08-07-2026

KHA PROJECT 063543066
DATE
SCALE AS SHOWN | DESIGNED BY CBB | DRAWN BY MTD | CHECKED BY CBB

CITY OF ADDISON
ADDISON JUNCTION
DEVELOPMENT
PUBLIC INFRASTRUCTURE
IMPROVEMENTS

THE RIOS GROUP
SUBSURFACE UTILITY ENGINEERING
UTILITY COORDINATION
7400 Sand Street
Fort Worth, Texas 76118
817.345.7300

SHEET NUMBER
16

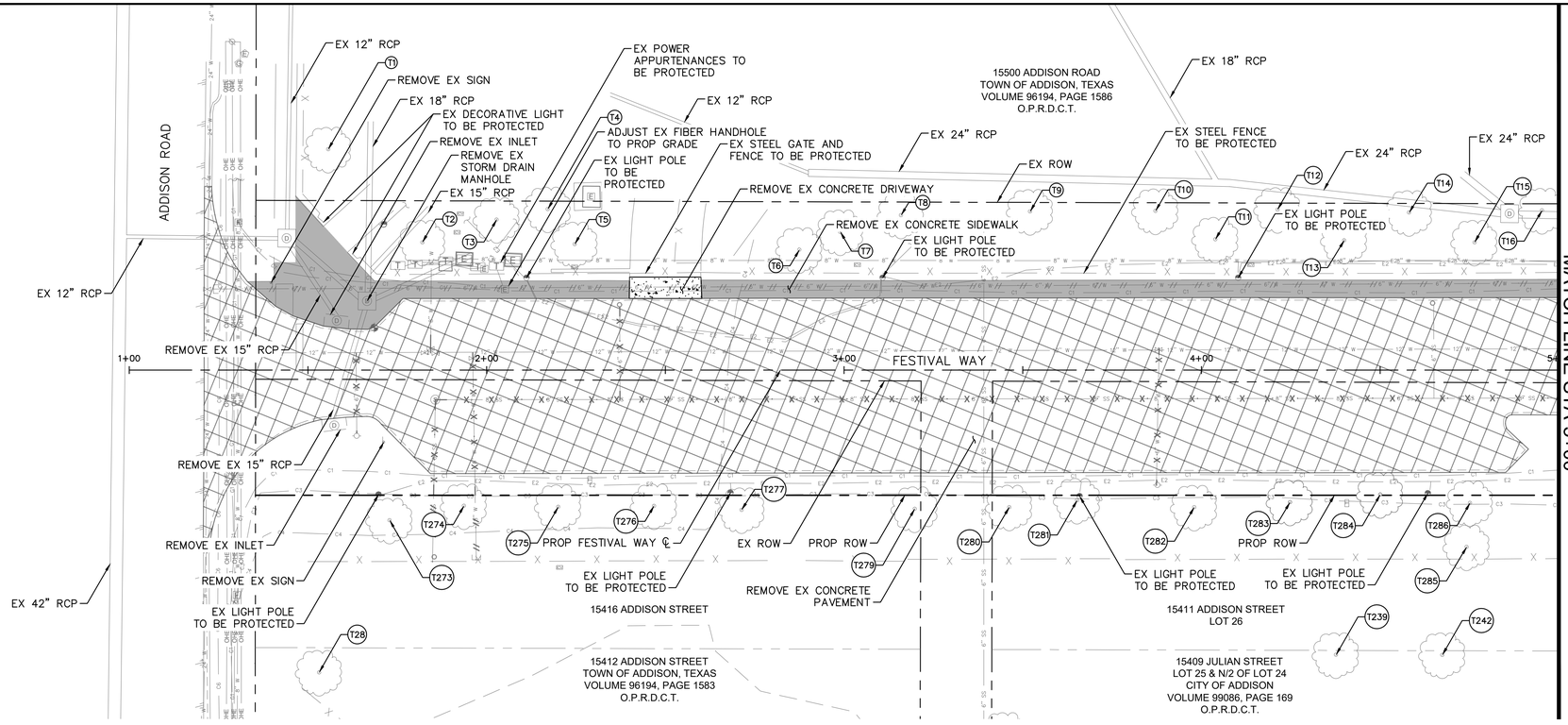

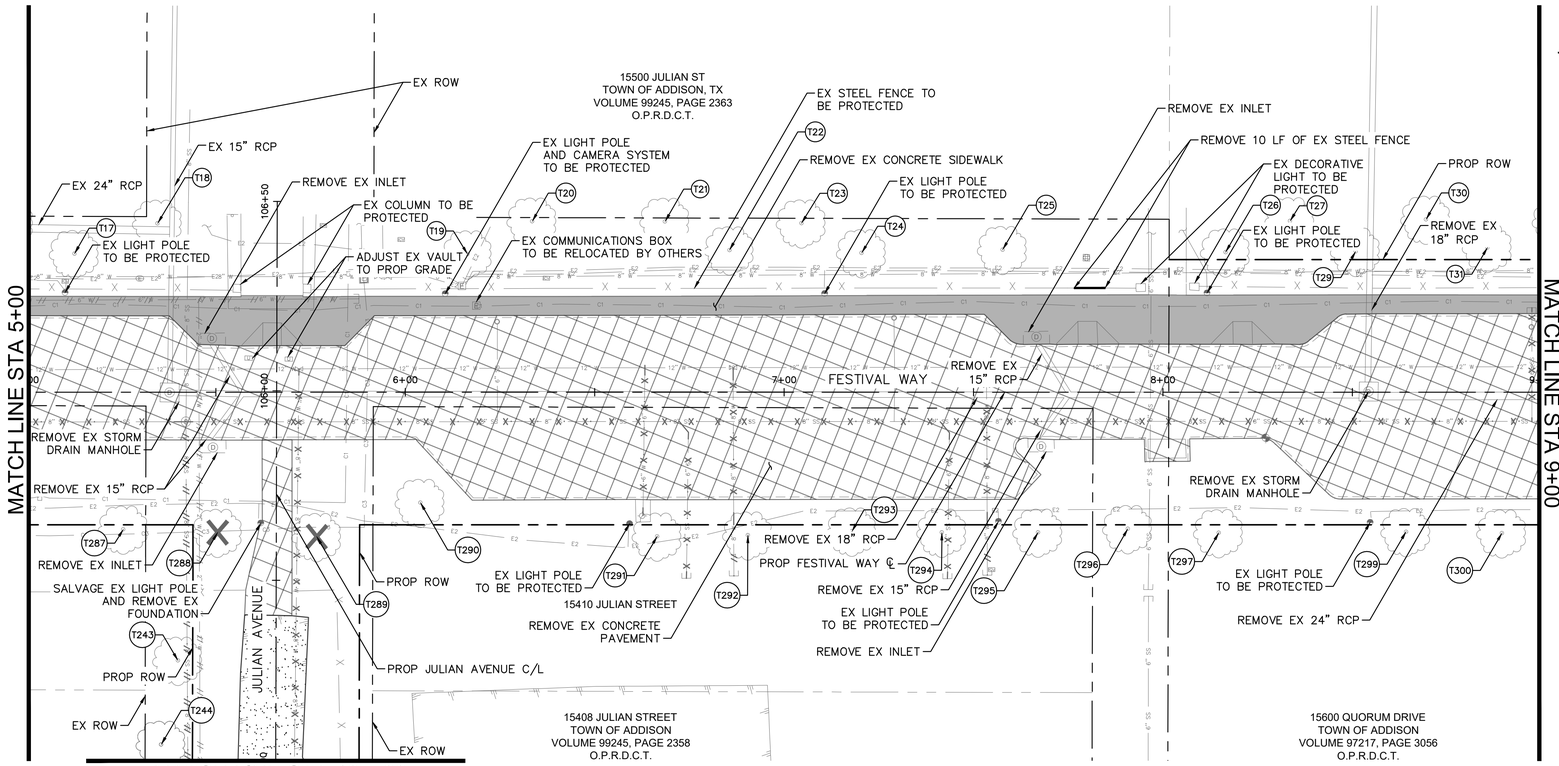

NOTES

1. CONTRACTOR IS RESPONSIBLE FOR RELOCATION OF ANY SIGNS AND COORDINATION WITH THE TOWN ON ANY NECESSARY MODIFICATIONS.
2. CONTRACTOR IS RESPONSIBLE FOR LOCATING AND REPAIRING ANY DAMAGED FACILITIES TO THE SATISFACTION OF THE TOWN.
3. THE EXISTENCE AND LOCATIONS OF ALL UNDERGROUND UTILITIES SHOWN ON THE DRAWINGS WERE OBTAINED FROM AVAILABLE RECORDS AND ARE APPROXIMATE. NEITHER THE OWNER NOR THE ENGINEER ASSUMES ANY RESPONSIBILITY FOR UTILITIES NOT SHOWN OR NOT IN THE LOCATION SHOWN. THE CONTRACTOR SHALL DETERMINE THE DEPTH AND LOCATION OF EXISTING UNDERGROUND UTILITIES PRIOR TO EXCAVATION AND SHALL BE REQUIRED TO TAKE ANY PRECAUTIONARY MEASURES TO PROTECT ALL LINES SHOWN AND/ OR ANY OTHER UNDERGROUND UTILITIES NOT OF RECORD OR NOT SHOWN ON THE PLANS. CONTRACTOR SHALL BE RESPONSIBLE FOR CONTACTING ALL FRANCHISE AND TOWN UTILITIES PRIOR TO CONSTRUCTION.
4. CONTRACTOR IS RESPONSIBLE FOR MAINTAINING ACCESS AND PROTECTING IN PLACE ALL EXISTING VALVES, MANHOLES, METER BOXES AND OTHER TOWN APPURTENANCES.
5. CONTRACTOR TO PROTECT ALL EXISTING UTILITY APPURTENANCES AND ASSURE THEY REMAIN ACCESSIBLE THROUGHOUT PROJECT.
6. REFER TO PAVING SHEETS FOR FRANCHISE UTILITY FACILITY WORK.
7. REFER TO WATER SHEETS FOR WATER LINE REMOVAL.
8. REFER TO WASTEWATER SHEETS FOR WASTEWATER REMOVAL.
9. CONTRACTOR TO PROTECT ALL REMAINING SIDEWALK AND AMENITIES.
10. CONTRACTOR TO SALVAGE AND DELIVER TO TOWN ALL FIRE HYDRANTS TO BE REMOVED.
11. FULL LANE PAVEMENT REPLACEMENT IS REQUIRED FOR PAVEMENT REMOVED FOR INSTALLATION OF THE WASTEWATER LINE ALONG ARAPAHO ROAD. CONTRACTOR SHALL REPLACE PAVEMENT FOR THE FULL WIDTH OF THE AFFECTED LANE.
12. ALL TREES NOT TO BE REMOVED MUST BE PROTECTED.

Know what's **below.**
Call before you dig.

No.	REVISIONS	DATE	BY

PROJECT NO. C00057/ BID NO. 27-31

Kimley»Horn
225 E. JOHN W. CARPENTER FREEWAY SUITE 1100
IRVING, TX 75062
PHONE: 214-369-6500
WWW.KIMLEY-HORN.COM

© 2026 KIMLEY-HORN AND ASSOCIATES, INC.

TEXAS REGISTERED ENGINEERING FIRM #F-928

11/06/2026

STATE OF TEXAS
L. NATHAN ANTE
96866
LICENSED
PROFESSIONAL ENGINEER

KHA PROJECT 063543066	DATE 11/06/2026	SCALE AS SHOWN	DESIGNED BY KCH
		DRAWN BY ZMZ	CHECKED BY FLS

ADDISON
ADDISON JUNCTION PUBLIC INFRASTRUCTURE IMPROVEMENTS

REMOVALS
FESTIVAL WAY
BEGIN TO STA 9+00

SHEET NUMBER
17

Plotted By: Mercado, Joseph November 06, 2026 - 01:40:56pm C:\ADCI\ACCDocs\Kimley-Horn\038436Dly-ADDISON JUNCTION PUBLIC\Project Files\CAD\PlanSheet\REMOVALS - FESTIVAL WAY.dwg
This document, together with the concepts and designs presented herein, is an instrument of service, is intended only for the specific purpose and client for which it was prepared. Reuse of and improper reliance on this document without written authorization and adaptation by Kimley-Horn and Associates, Inc. shall be without liability to Kimley-Horn and Associates, Inc.

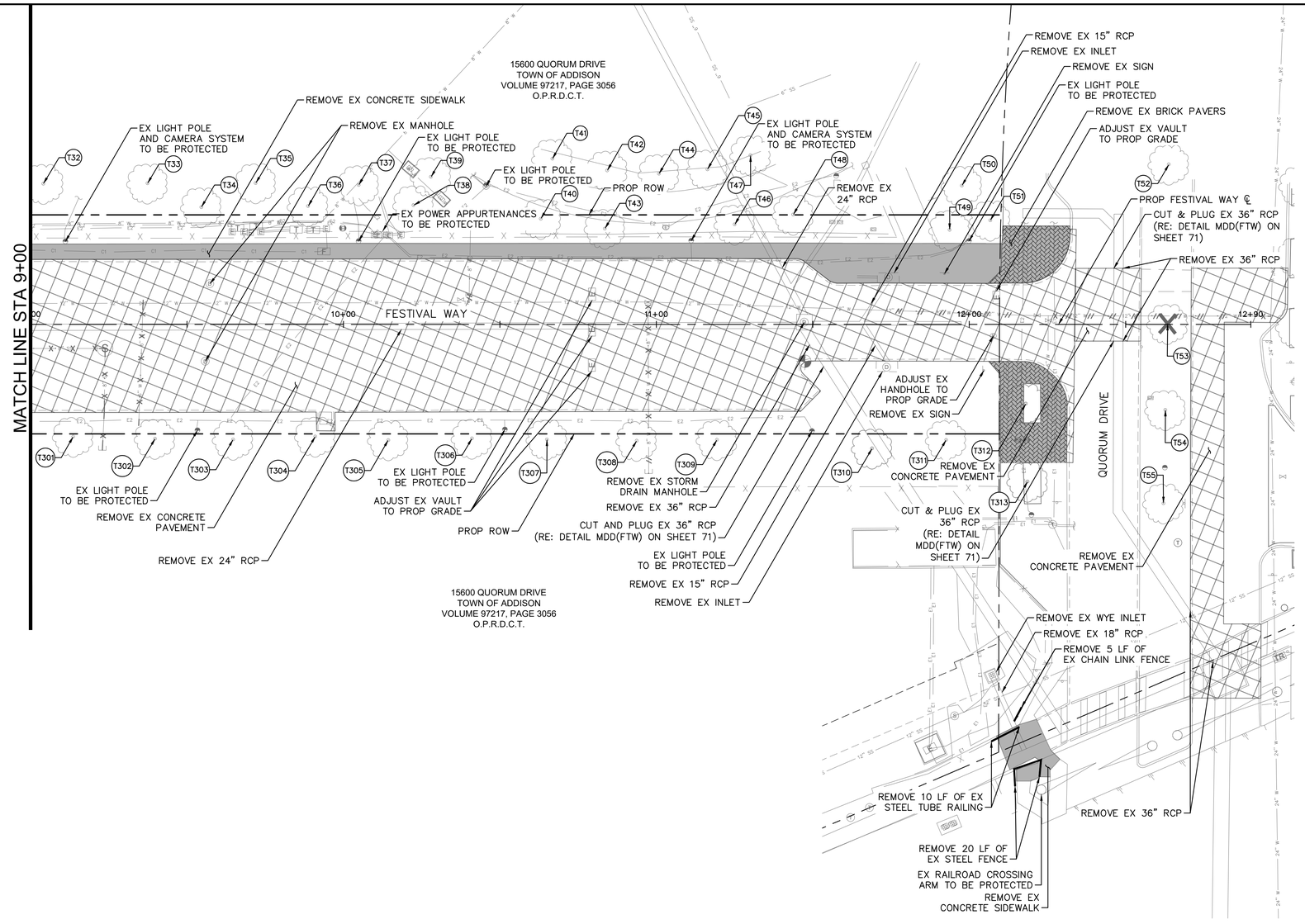

NORTH

GRAPHIC SCALE IN FEET
0 10 20 40

LEGEND

- EX ROW
- PROP ROW
- PROP EASEMENT
- 2" W — EX 2" WATER
- 6" W — EX 6" WATER
- 8" W — EX 8" WATER
- 12" W — EX 12" WATER
- 24" W — EX 24" WATER
- 6" SS — EX 6" SANITARY SEWER
- 8" SS — EX 8" SANITARY SEWER
- 10" SS — EX 10" SANITARY SEWER
- 12" SS — EX 12" SANITARY SEWER
- EX STORM DRAIN
- OHE — EX OVERHEAD ELECTRIC
- E1 — EX ONCOR UGE
- E2 — EX TOWN OF ADDISON UGE
- C1 — EX ATT FIBER
- C2 — EX ATT TELEPHONE
- C3 — EX SPECTRUM FIBER
- C4 — EX SPECTRUM CABLE
- C5 — EX LOGIX FIBER
- C6 — EX MCI FIBER
- G1 — EX ATMOS GAS
- EX FENCE TO BE PROTECTED
- EX FENCE TO BE REMOVED
- ASPHALT PAVEMENT TO BE REMOVED
- CONCRETE PAVEMENT TO BE REMOVED
- CONCRETE SIDEWALK TO BE REMOVED
- CONCRETE PAVERS TO BE REMOVED
- CONCRETE DRIVEWAY TO BE REMOVED
- EX TREE TO BE REMOVED
- EX TREE TO BE PROTECTED

NOTES

1. CONTRACTOR IS RESPONSIBLE FOR RELOCATION OF ANY SIGNS AND COORDINATION WITH THE TOWN ON ANY NECESSARY MODIFICATIONS.
2. CONTRACTOR IS RESPONSIBLE FOR LOCATING AND REPAIRING ANY DAMAGED FACILITIES TO THE SATISFACTION OF THE TOWN.
3. THE EXISTENCE AND LOCATIONS OF ALL UNDERGROUND UTILITIES SHOWN ON THE DRAWINGS WERE OBTAINED FROM AVAILABLE RECORDS AND ARE APPROXIMATE. NEITHER THE OWNER NOR THE ENGINEER ASSUMES ANY RESPONSIBILITY FOR UTILITIES NOT SHOWN OR NOT IN THE LOCATION SHOWN. THE CONTRACTOR SHALL DETERMINE THE DEPTH AND LOCATION OF EXISTING UNDERGROUND UTILITIES PRIOR TO EXCAVATION AND SHALL BE REQUIRED TO TAKE ANY PRECAUTIONARY MEASURES TO PROTECT ALL LINES SHOWN AND/ OR ANY OTHER UNDERGROUND UTILITIES NOT OF RECORD OR NOT SHOWN ON THE PLANS. CONTRACTOR SHALL BE RESPONSIBLE FOR CONTACTING ALL FRANCHISE AND TOWN UTILITIES PRIOR TO CONSTRUCTION.
4. CONTRACTOR IS RESPONSIBLE FOR MAINTAINING ACCESS AND PROTECTING IN PLACE ALL EXISTING VALVES, MANHOLES, METER BOXES AND OTHER TOWN APPURTENANCES.
5. CONTRACTOR TO PROTECT ALL EXISTING UTILITY APPURTENANCES AND ASSURE THEY REMAIN ACCESSIBLE THROUGHOUT PROJECT.
6. REFER TO PAVING SHEETS FOR FRANCHISE UTILITY FACILITY WORK.
7. REFER TO WATER SHEETS FOR WATER LINE REMOVAL.
8. REFER TO WASTEWATER SHEETS FOR WASTEWATER REMOVAL.
9. CONTRACTOR TO PROTECT ALL REMAINING SIDEWALK AND AMENITIES.
10. CONTRACTOR TO SALVAGE AND DELIVER TO TOWN ALL FIRE HYDRANTS TO BE REMOVED.
11. FULL LANE PAVEMENT REPLACEMENT IS REQUIRED FOR PAVEMENT REMOVED FOR INSTALLATION OF THE WASTEWATER LINE ALONG ARAPAHO ROAD. CONTRACTOR SHALL REPLACE PAVEMENT FOR THE FULL WIDTH OF THE AFFECTED LANE.
12. ALL TREES NOT TO BE REMOVED MUST BE PROTECTED.

811 Know what's **below.** **Call** before you dig.

No.	REVISIONS	DATE	BY

PROJECT NO. C00057/ BID NO. 27-31

Kimley»Horn
225 E. JOHN W. CARPENTER FREEWAY SUITE 1100
IRVING, TX 75062
PHONE: 214-369-2100
WWW.KIMLEY-HORN.COM

© 2026 KIMLEY-HORN AND ASSOCIATES, INC.
TEXAS REGISTERED ENGINEERING FIRM #F-928

11/06/2026

STATE OF TEXAS
L. NATHAN ANTE
96866
LICENSED
PROFESSIONAL ENGINEER
L. Nathan Ante

KHA PROJECT	063543066
DATE	11/06/2026
SCALE	AS SHOWN
DESIGNED BY	KCH
DRAWN BY	ZMZ
CHECKED BY	FLS

ADDISON
ADDISON JUNCTION
PUBLIC
INFRASTRUCTURE
IMPROVEMENTS

REMOVALS
FESTIVAL WAY
STA 9+00 TO END

SHEET NUMBER
18

Plotted By: Mercado, Joseph November 05, 2026 01:40:08pm G:\ACAD\Projects\Valley Ranch\063543066-ADDISON JUNCTION PUBLIC\Project Files\CAD\PlanSheets\REMOVALS - FESTIVAL WAY.dwg
This document, together with the concepts and designs presented herein, as an instrument of service, is intended only for the specific purpose and client for which it was prepared. Reuse of and improper reliance on this document without written authorization and adaptation by Kimley-Horn and Associates, Inc. shall be without liability to Kimley-Horn and Associates, Inc.

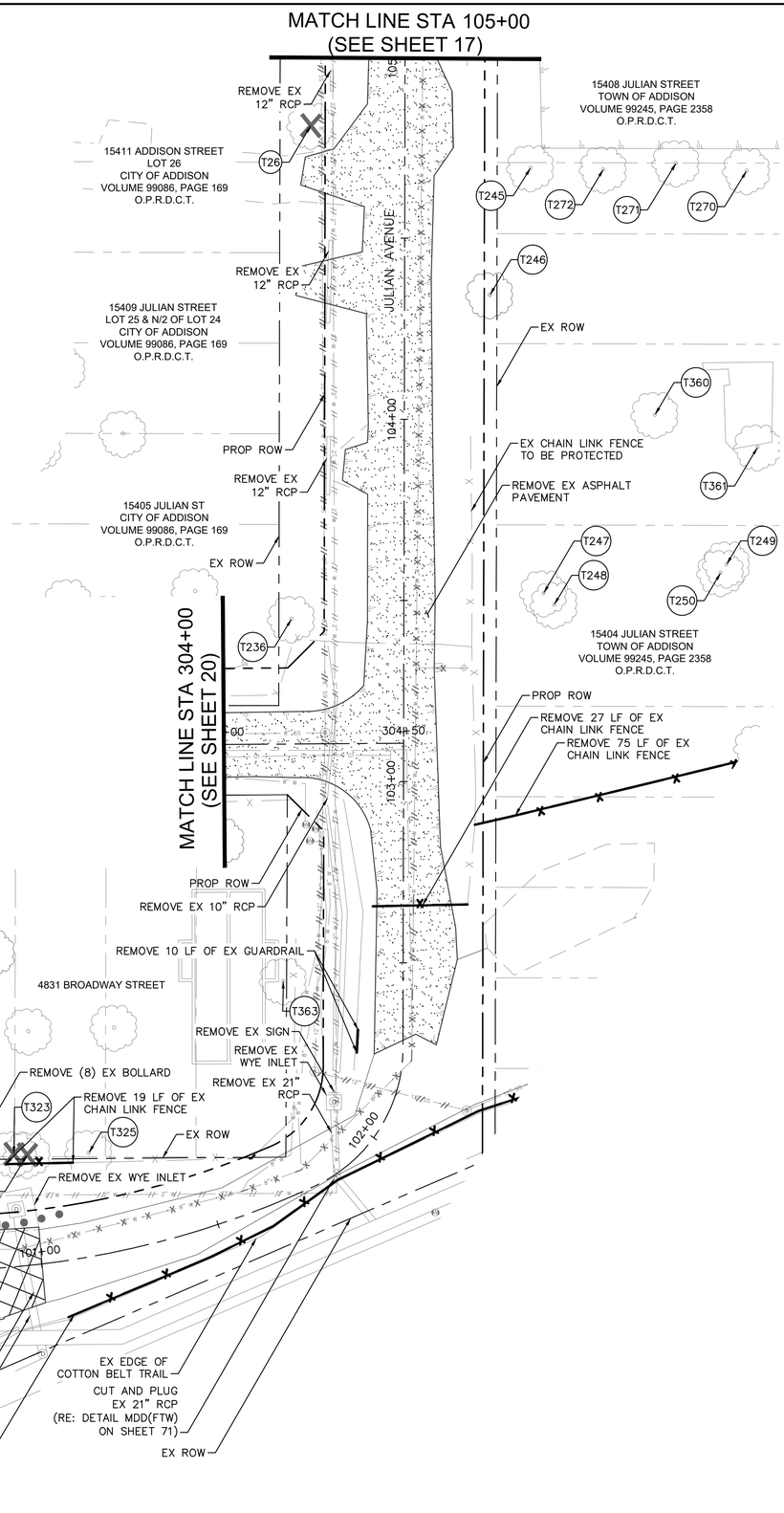

LEGEND

- EX ROW
- PROP ROW
- PROP EASEMENT
- EX 2" WATER
- EX 6" WATER
- EX 8" WATER
- EX 12" WATER
- EX 24" WATER
- EX 6" SANITARY SEWER
- EX 8" SANITARY SEWER
- EX 10" SANITARY SEWER
- EX 12" SANITARY SEWER
- EX STORM DRAIN
- EX OVERHEAD ELECTRIC
- EX ONCOR UGE
- EX TOWN OF ADDISON UGE
- EX ATT FIBER
- EX ATT TELEPHONE
- EX SPECTRUM FIBER
- EX SPECTRUM CABLE
- EX LOGIX FIBER
- EX MCI FIBER
- EX ATMOS GAS
- EX FENCE TO BE PROTECTED
- EX FENCE TO BE REMOVED
- ASPHALT PAVEMENT TO BE REMOVED
- CONCRETE PAVEMENT TO BE REMOVED
- CONCRETE SIDEWALK TO BE REMOVED
- CONCRETE PAVERS TO BE REMOVED
- CONCRETE DRIVEWAY TO BE REMOVED
- EX TREE TO BE REMOVED
- EX TREE TO BE PROTECTED

NOTES

1. CONTRACTOR IS RESPONSIBLE FOR RELOCATION OF ANY SIGNS AND COORDINATION WITH THE TOWN ON ANY NECESSARY MODIFICATIONS.
2. CONTRACTOR IS RESPONSIBLE FOR LOCATING AND REPAIRING ANY DAMAGED FACILITIES TO THE SATISFACTION OF THE TOWN.
3. THE EXISTENCE AND LOCATIONS OF ALL UNDERGROUND UTILITIES SHOWN ON THE DRAWINGS WERE OBTAINED FROM AVAILABLE RECORDS AND ARE APPROXIMATE. NEITHER THE OWNER NOR THE ENGINEER ASSUMES ANY RESPONSIBILITY FOR UTILITIES NOT SHOWN OR NOT IN THE LOCATION SHOWN. THE CONTRACTOR SHALL DETERMINE THE DEPTH AND LOCATION OF EXISTING UNDERGROUND UTILITIES PRIOR TO EXCAVATION AND SHALL BE REQUIRED TO TAKE ANY PRECAUTIONARY MEASURES TO PROTECT ALL LINES SHOWN AND/ OR ANY OTHER UNDERGROUND UTILITIES NOT OF RECORD OR NOT SHOWN ON THE PLANS. CONTRACTOR SHALL BE RESPONSIBLE FOR CONTACTING ALL FRANCHISE AND TOWN UTILITIES PRIOR TO CONSTRUCTION.
4. CONTRACTOR IS RESPONSIBLE FOR MAINTAINING ACCESS AND PROTECTING IN PLACE ALL EXISTING VALVES, MANHOLES, METER BOXES AND OTHER TOWN APPURTENANCES.
5. CONTRACTOR TO PROTECT ALL EXISTING UTILITY APPURTENANCES AND ASSURE THEY REMAIN ACCESSIBLE THROUGHOUT PROJECT.
6. REFER TO PAVING SHEETS FOR FRANCHISE UTILITY FACILITY WORK.
7. REFER TO WATER SHEETS FOR WATER LINE REMOVAL.
8. REFER TO WASTEWATER SHEETS FOR WASTEWATER REMOVAL.
9. CONTRACTOR TO PROTECT ALL REMAINING SIDEWALK AND AMENITIES.
10. CONTRACTOR TO SALVAGE AND DELIVER TO TOWN ALL FIRE HYDRANTS TO BE REMOVED.
11. FULL LANE PAVEMENT REPLACEMENT IS REQUIRED FOR PAVEMENT REMOVED FOR INSTALLATION OF THE WASTEWATER LINE ALONG ARAPAHO ROAD. CONTRACTOR SHALL REPLACE PAVEMENT FOR THE FULL WIDTH OF THE AFFECTED LANE.
12. ALL TREES NOT TO BE REMOVED MUST BE PROTECTED.

811 Know what's **below.** **Call** before you dig.

No.	REVISIONS	DATE	BY

PROJECT NO. C00057/ BID NO. 27-31

Kimley»Horn
225 E. JOHN W. CARPENTER FREEWAY SUITE 1100
IRVING, TX 75062
PHONE: 214.369.6500
WWW.KIMLEY-HORN.COM

© 2026 KIMLEY-HORN AND ASSOCIATES, INC.

TEXAS REGISTERED ENGINEERING FIRM #F-928

11/06/2026

STATE OF TEXAS
L. NATHAN ANTE
96866
LICENSED
PROFESSIONAL ENGINEER
L. Nathan Ante

KHA PROJECT 063543066	DATE 11/06/2026	SCALE AS SHOWN	DESIGNED BY KCH
		DRAWN BY ZMZ	CHECKED BY FLS

ADDISON
ADDISON JUNCTION
PUBLIC
INFRASTRUCTURE
IMPROVEMENTS

REMOVALS
JULIAN AVENUE
BEGIN TO END

SHEET NUMBER
19

Plotted By: Zane Zinetti Zach - November 06, 2026 - 08:35:50am G:\ACCAD\Docs\Kimley-Horn\063543066-ADDISON JUNCTION PUBLIC\Project Files\CAD\PlanSheets\REMOVALS - JULIAN AVENUE.dwg
This document, together with the concepts and designs presented herein, as an instrument of service, is intended only for the specific purpose and client for which it was prepared. Reuse of and improper reliance on this document without written authorization and adaptation by Kimley-Horn and Associates, Inc. shall be without liability to Kimley-Horn and Associates, Inc.

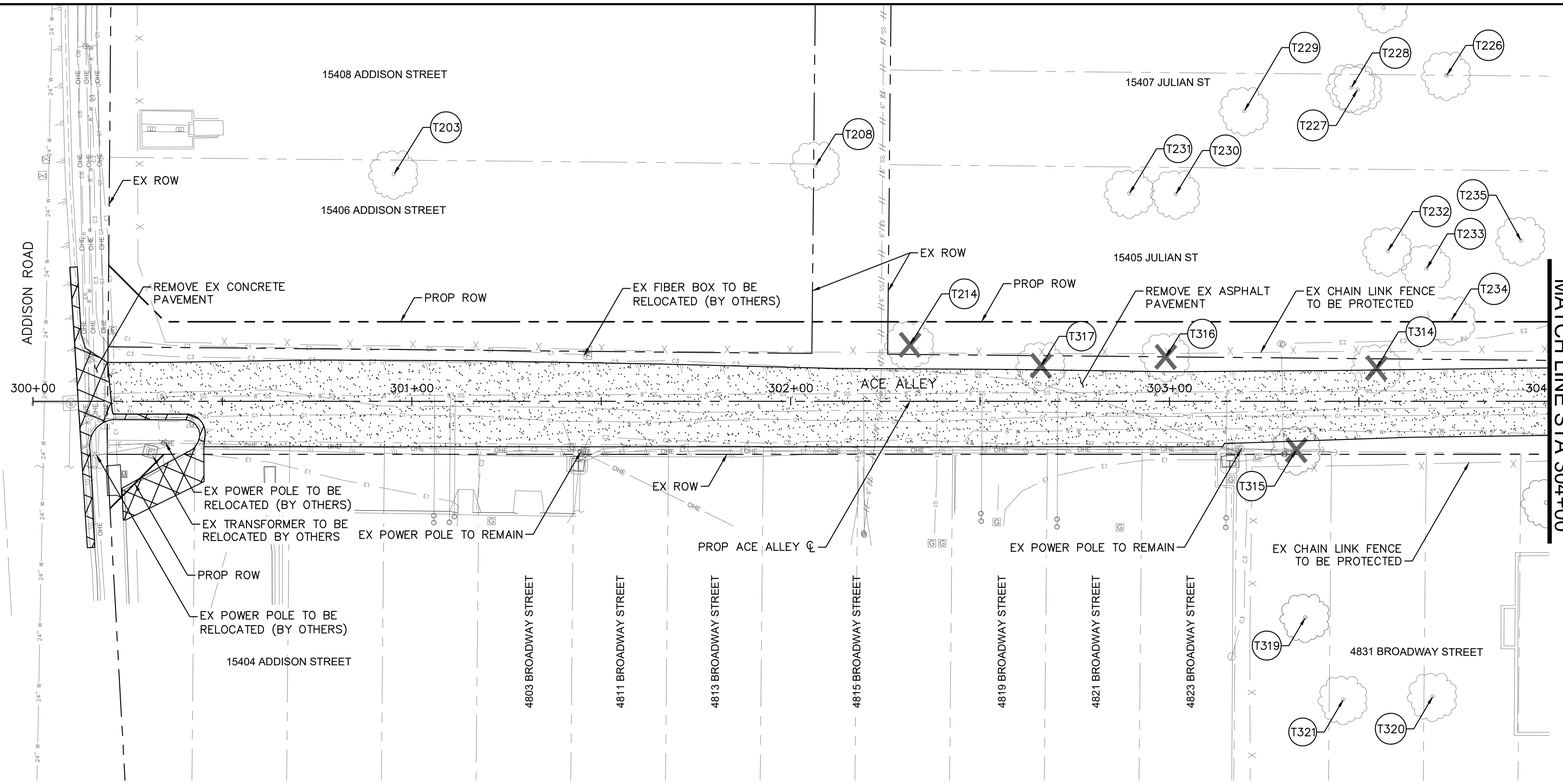

NORTH

GRAPHIC SCALE IN FEET
0 10 20 40

LEGEND

- EX ROW
- PROP ROW
- PROP EASEMENT
- EX 2" WATER
- EX 6" WATER
- EX 8" WATER
- EX 12" WATER
- EX 24" WATER
- EX 6" SANITARY SEWER
- EX 8" SANITARY SEWER
- EX 10" SANITARY SEWER
- EX 12" SANITARY SEWER
- EX STORM DRAIN
- EX OVERHEAD ELECTRIC
- EX ONCOR UGE
- EX TOWN OF ADDISON UGE
- EX ATT FIBER
- EX ATT TELEPHONE
- EX SPECTRUM FIBER
- EX SPECTRUM CABLE
- EX LOGIX FIBER
- EX MCI FIBER
- EX ATMOS GAS
- EX FENCE TO BE PROTECTED
- EX FENCE TO BE REMOVED
- ASPHALT PAVEMENT TO BE REMOVED
- CONCRETE PAVEMENT TO BE REMOVED
- CONCRETE SIDEWALK TO BE REMOVED
- CONCRETE PAVERS TO BE REMOVED
- CONCRETE DRIVEWAY TO BE REMOVED
- EX TREE TO BE REMOVED
- EX TREE TO BE PROTECTED

NOTES

1. CONTRACTOR IS RESPONSIBLE FOR RELOCATION OF ANY SIGNS AND COORDINATION WITH THE TOWN ON ANY NECESSARY MODIFICATIONS.
2. CONTRACTOR IS RESPONSIBLE FOR LOCATING AND REPAIRING ANY DAMAGED FACILITIES TO THE SATISFACTION OF THE TOWN.
3. THE EXISTENCE AND LOCATIONS OF ALL UNDERGROUND UTILITIES SHOWN ON THE DRAWINGS WERE OBTAINED FROM AVAILABLE RECORDS AND ARE APPROXIMATE. NEITHER THE OWNER NOR THE ENGINEER ASSUMES ANY RESPONSIBILITY FOR UTILITIES NOT SHOWN OR NOT IN THE LOCATION SHOWN. THE CONTRACTOR SHALL DETERMINE THE DEPTH AND LOCATION OF EXISTING UNDERGROUND UTILITIES PRIOR TO EXCAVATION AND SHALL BE REQUIRED TO TAKE ANY PRECAUTIONARY MEASURES TO PROTECT ALL LINES SHOWN AND/ OR ANY OTHER UNDERGROUND UTILITIES NOT OF RECORD OR NOT SHOWN ON THE PLANS. CONTRACTOR SHALL BE RESPONSIBLE FOR CONTACTING ALL FRANCHISE AND TOWN UTILITIES PRIOR TO CONSTRUCTION.
4. CONTRACTOR IS RESPONSIBLE FOR MAINTAINING ACCESS AND PROTECTING IN PLACE ALL EXISTING VALVES, MANHOLES, METER BOXES AND OTHER TOWN APPURTENANCES.
5. CONTRACTOR TO PROTECT ALL EXISTING UTILITY APPURTENANCES AND ASSURE THEY REMAIN ACCESSIBLE THROUGHOUT PROJECT.
6. REFER TO PAVING SHEETS FOR FRANCHISE UTILITY FACILITY WORK.
7. REFER TO WATER SHEETS FOR WATER LINE REMOVAL.
8. REFER TO WASTEWATER SHEETS FOR WASTEWATER REMOVAL.
9. CONTRACTOR TO PROTECT ALL REMAINING SIDEWALK AND AMENITIES.
10. CONTRACTOR TO SALVAGE AND DELIVER TO TOWN ALL FIRE HYDRANTS TO BE REMOVED.
11. FULL LANE PAVEMENT REPLACEMENT IS REQUIRED FOR PAVEMENT REMOVED FOR INSTALLATION OF THE WASTEWATER LINE ALONG ARAPAHO ROAD. CONTRACTOR SHALL REPLACE PAVEMENT FOR THE FULL WIDTH OF THE AFFECTED LANE.
12. ALL TREES NOT TO BE REMOVED MUST BE PROTECTED.

811 Know what's **below.** **Call** before you dig.

No.	REVISIONS	DATE	BY

PROJECT NO. C00057/ BID NO. 27-31

Kimley»Horn
225 E. JOHN W. CARPENTER FREEWAY SUITE 1100
IRVING, TX 75062
PHONE: 214-369-2100
WWW.KIMLEY-HORN.COM

© 2026 KIMLEY-HORN AND ASSOCIATES, INC.
TEXAS REGISTERED ENGINEERING FIRM #F-928

11/06/2026

STATE OF TEXAS
L. NATHAN ANTE
96866
LICENSED
PROFESSIONAL ENGINEER

L. Nathan Ante

KHA PROJECT	063543066
DATE	11/06/2026
SCALE	AS SHOWN
DESIGNED BY	KCH
DRAWN BY	ZMZ
CHECKED BY	FLS

ADDISON
ADDISON JUNCTION
PUBLIC
INFRASTRUCTURE
IMPROVEMENTS

REMOVALS
ACE ALLEY
BEGIN TO END

SHEET NUMBER
20

Plotted By: Zimmerli, Zack - November 09, 2026 - 11:13:59am G:\AGC\ACDocs\Vinings\Vinings_063543066_ADDISON JUNCTION PUBLIC\Project Files\CAD\TitanSheets\REMOVALS - ACE ALLEY.dwg
This document, together with the concepts and designs presented herein, as an instrument of service, is intended only for the specific project for which it was prepared. Reuse of and improper reliance on this document without written authorization and adaptation by Kimley-Horn and Associates, Inc. shall be without liability to Kimley-Horn and Associates, Inc.

Plotted By: Zanetti, Zack - November 05, 2026 - 09:47:51am G:\MGT\ACDocs\Winterton\063543066-ADDISON JUNCTION PUBLIC\04 Project Files\CAD\PlanSheets\REMOVALS — ARAPAHO ROAD.dwg
This document, together with the concepts and designs presented herein, as an instrument of service, is intended only for the specific purpose and client for which it was prepared. Reuse of and improper reliance on this document without written authorization and adaptation by Kimley-Horn and Associates, Inc. shall be without liability to Kimley-Horn and Associates, Inc.

4811 ARAPAHO ROAD
DALLAS AREA RAPID TRANSIT
VOLUME 96099, PAGE 5197
O.P.R.D.C.T.

5035 ARAPAHO ROAD
TOWN OF ADDISON
VOLUME 93243, PAGE 6422
O.P.R.D.C.T.

QUORUM DRIVE

REMOVE EX BRICK PAVERS
REMOVE EX CONCRETE SIDEWALK
EX POWER BOX TO BE PROTECTED
REMOVE EX CONCRETE SIDEWALK
REMOVE EX BRICK PAVERS
EX LIGHT POLE TO BE PROTECTED
REMOVE EX CONCRETE PAVEMENT
EX LIGHT POLE TO BE PROTECTED
EX ROW
EX ROW
EX ROW

T4010 T4018 T4019 T4020 T4009 T4021 T4481 T4480
T4000 T4006 T4007 T4005 T339 T338 T337

101+00 102+00 103+00 104+00

ARAPAHO ROAD

PROP ARAPAHO ROAD ℄

MATCH LINE STA 104+00

NORTH

GRAPHIC SCALE IN FEET
0 10 20 40

LEGEND

- EX ROW
- PROP ROW
- PROP EASEMENT
- 2" W — EX 2" WATER
- 6" W — EX 6" WATER
- 8" W — EX 8" WATER
- 12" W — EX 12" WATER
- 24" W — EX 24" WATER
- 6" SS — EX 6" SANITARY SEWER
- 8" SS — EX 8" SANITARY SEWER
- 10" SS — EX 10" SANITARY SEWER
- 12" SS — EX 12" SANITARY SEWER
- EX STORM DRAIN
- OHE — EX OVERHEAD ELECTRIC
- E1 — EX ONCOR UGE
- E2 — EX TOWN OF ADDISON UGE
- C1 — EX ATT FIBER
- C2 — EX ATT TELEPHONE
- C3 — EX SPECTRUM FIBER
- C4 — EX SPECTRUM CABLE
- C5 — EX LOGIX FIBER
- C6 — EX MCI FIBER
- G1 — EX ATMOS GAS
- EX FENCE TO BE PROTECTED
- EX FENCE TO BE REMOVED
- ASPHALT PAVEMENT TO BE REMOVED
- CONCRETE PAVEMENT TO BE REMOVED
- CONCRETE SIDEWALK TO BE REMOVED
- CONCRETE PAVERS TO BE REMOVED
- CONCRETE DRIVEWAY TO BE REMOVED
- EX TREE TO BE REMOVED
- EX TREE TO BE PROTECTED

5035 ARAPAHO ROAD
TOWN OF ADDISON
VOLUME 93243, PAGE 6422
O.P.R.D.C.T.

5035 ARAPAHO ROAD
TOWN OF ADDISON
VOLUME 93243, PAGE 6422
O.P.R.D.C.T.

SPECTRUM DRIVE

REMOVE EX CONCRETE PAVEMENT
EX LIGHT POLE TO BE PROTECTED
REMOVE EX CONCRETE SIDEWALK
EX INLET TO BE PROTECTED
EX ROW
EX POWER BOX TO BE PROTECTED
REMOVE EX CONCRETE SIDEWALK
EX LIGHT POLE TO BE PROTECTED

T336 T335 T334 T333 T332 T331 T1000

105+00 106+00 107+00 2+00 1+00

MATCH LINE STA 104+00

PROP ARAPAHO ROAD ℄

ARAPAHO ROAD

PROP SPECTRUM DRIVE ℄

EX TRAFFIC BOX TO BE PROTECTED

NORTH

EX ROW

EX LIGHT POLE TO BE PROTECTED

REMOVE EX BRICK PAVERS

EX ROW

PROP SPECTRUM DRIVE ℄

T326 T327 T348 T328 T349

5+00 4+00

SPECTRUM DRIVE

NOTES

1. CONTRACTOR IS RESPONSIBLE FOR RELOCATION OF ANY SIGNS AND COORDINATION WITH THE TOWN ON ANY NECESSARY MODIFICATIONS.
2. CONTRACTOR IS RESPONSIBLE FOR LOCATING AND REPAIRING ANY DAMAGED FACILITIES TO THE SATISFACTION OF THE TOWN.
3. THE EXISTENCE AND LOCATIONS OF ALL UNDERGROUND UTILITIES SHOWN ON THE DRAWINGS WERE OBTAINED FROM AVAILABLE RECORDS AND ARE APPROXIMATE. NEITHER THE OWNER NOR THE ENGINEER ASSUMES ANY RESPONSIBILITY FOR UTILITIES NOT SHOWN OR NOT IN THE LOCATION SHOWN. THE CONTRACTOR SHALL DETERMINE THE DEPTH AND LOCATION OF EXISTING UNDERGROUND UTILITIES PRIOR TO EXCAVATION AND SHALL BE REQUIRED TO TAKE ANY PRECAUTIONARY MEASURES TO PROTECT ALL LINES SHOWN AND/ OR ANY OTHER UNDERGROUND UTILITIES NOT OF RECORD OR NOT SHOWN ON THE PLANS. CONTRACTOR SHALL BE RESPONSIBLE FOR CONTACTING ALL FRANCHISE AND TOWN UTILITIES PRIOR TO CONSTRUCTION.
4. CONTRACTOR IS RESPONSIBLE FOR MAINTAINING ACCESS AND PROTECTING IN PLACE ALL EXISTING VALVES, MANHOLES, METER BOXES AND OTHER TOWN APPURTENANCES.
5. CONTRACTOR TO PROTECT ALL EXISTING UTILITY APPURTENANCES AND ASSURE THEY REMAIN ACCESSIBLE THROUGHOUT PROJECT.
6. REFER TO PAVING SHEETS FOR FRANCHISE UTILITY FACILITY WORK.
7. REFER TO WATER SHEETS FOR WATER LINE REMOVAL.
8. REFER TO WASTEWATER SHEETS FOR WASTEWATER REMOVAL.
9. CONTRACTOR TO PROTECT ALL REMAINING SIDEWALK AND AMENITIES.
10. CONTRACTOR TO SALVAGE AND DELIVER TO TOWN ALL FIRE HYDRANTS TO BE REMOVED.
11. FULL LANE PAVEMENT REPLACEMENT IS REQUIRED FOR PAVEMENT REMOVED FOR INSTALLATION OF THE WASTEWATER LINE ALONG ARAPAHO ROAD. CONTRACTOR SHALL REPLACE PAVEMENT FOR THE FULL WIDTH OF THE AFFECTED LANE.
12. ALL TREES NOT TO BE REMOVED MUST BE PROTECTED.

811 Know what's **below.** **Call** before you dig.

No.	REVISIONS	DATE	BY

PROJECT NO. C00057/ BID NO. 27-31

Kimley»Horn
225 E. JOHN W. CARPENTER FREEWAY SUITE 1100
IRVING, TX 75062
PHONE: 214-565-0500
WWW.KIMLEY-HORN.COM
© 2026 KIMLEY-HORN AND ASSOCIATES, INC.
TEXAS REGISTERED ENGINEERING FIRM #F-928

11/06/2026
STATE OF TEXAS
L. NATHAN ANTE
96866
REGISTERED
ENGINEER
L. Nathan Ante

KHA PROJECT 063543066	DATE 11/06/2026	SCALE AS SHOWN	DESIGNED BY KCH
		DRAWN BY ZMZ	CHECKED BY FLS

ADDISON
ADDISON JUNCTION
PUBLIC
INFRASTRUCTURE
IMPROVEMENTS

REMOVALS
ARAPAHO ROAD
BEGIN TO END

SHEET NUMBER
21

FESTIVAL WAY

TREE TABLE				
NO.	STA.	OFFSET	DESCRIPTION CALIPER/SPECIES/CONDITION	NOTES
T1	1+55.70	LT 61.7'	17"/OAK/UNK.	PROTECT
T2	1+82.05	LT 35.7'	13"/HOLLY/UNK.	PROTECT
T3	2+02.82	LT 42.0'	14"/HOLLY/UNK.	PROTECT
T4	2+17.13	LT 45.0'	11"/HOLLY/UNK.	PROTECT
T5	2+24.65	LT 35.2'	11"/HOLLY/UNK.	PROTECT
T6	2+87.52	LT 33.6'	10"/HOLLY/UNK.	PROTECT
T7	2+98.96	LT 38.6'	7"/HOLLY/UNK.	PROTECT
T8	3+15.95	LT 43.3'	16"/ELM/UNK.	PROTECT
T9	3+52.05	LT 44.3'	15"/OAK/UNK.	PROTECT
T10	3+87.14	LT 44.5'	12"/OAK/UNK.	PROTECT
T11	4+03.91	LT 36.5'	11"/OAK/UNK.	PROTECT
T12	4+21.28	LT 44.8'	11"/OAK/UNK.	PROTECT
T13	4+39.94	LT 36.3'	12"/OAK/UNK.	PROTECT
T14	4+58.09	LT 44.0'	11"/OAK/UNK.	PROTECT
T15	4+76.40	LT 35.7'	13"/OAK/UNK.	PROTECT
T16	4+95.28	LT 44.6'	11"/OAK/UNK.	PROTECT
T17	5+12.67	LT 36.6'	15"/OAK/UNK.	PROTECT
T18	5+34.59	LT 44.6'	15"/OAK/UNK.	PROTECT
T19	6+16.43	LT 36.5'	17"/OAK/UNK.	PROTECT
T20	6+33.50	LT 45.1'	10"/OAK/UNK.	PROTECT
T21	6+68.55	LT 45.1'	11"/OAK/UNK.	PROTECT
T22	6+85.58	LT 37.5'	11"/OAK/UNK.	PROTECT
T23	7+04.59	LT 44.6'	9"/OAK/UNK.	PROTECT
T24	7+20.48	LT 36.8'	12"/OAK/UNK.	PROTECT
T25	7+57.69	LT 37.6'	14"/OAK/UNK.	PROTECT
T26	8+16.55	LT 37.0'	17"/OAK/UNK.	PROTECT
T27	8+33.57	LT 45.2'	10"/OAK/UNK.	PROTECT
T28	1+53.16	RT 84.5'	2"/POMEGRANITE/FAIR	PROTECT
T29	8+50.89	LT 37.2'	14"/OAK/UNK.	PROTECT
T30	8+69.47	LT 45.6'	12"/OAK/UNK.	PROTECT
T31	8+85.68	LT 38.2'	14"/OAK/UNK.	PROTECT
T32	9+04.12	LT 45.0'	12"/OAK/UNK.	PROTECT
T33	9+37.41	LT 45.1'	14"/OAK/UNK.	PROTECT
T34	9+54.60	LT 37.5'	12"/OAK/UNK.	PROTECT
T35	9+71.99	LT 45.2'	15"/OAK/UNK	PROTECT
T36	9+88.72	LT 37.8'	12"/OAK/UNK.	PROTECT
T37	10+04.92	LT 44.6'	13"/OAK/UNK.	PROTECT
T38	10+22.44	LT 38.1'	10"/OAK/UNK.	PROTECT
T39	10+27.98	LT 47.2'	13"/ELM/UNK.	PROTECT
T40	10+63.11	LT 33.8'	13"/ELM/UNK.	PROTECT
T41	10+66.79	LT 53.0'	11"/ELM/UNK.	PROTECT
T42	10+84.33	LT 49.2'	10"/ELM/UNK.	PROTECT
T43	10+83.56	LT 30.6'	11"/ELM/UNK.	PROTECT
T44	11+00.85	LT 48.2'	10"/ELM/UNK.	PROTECT
T45	11+16.34	LT 49.6'	10"/ELM/UNK.	PROTECT
T46	11+25.07	LT 32.0'	12"/ELM/UNK.	PROTECT
T47	11+30.12	LT 54.1'	11"/ELM/UNK.	PROTECT
T48	11+43.76	LT 35.1'	16"/ELM/UNK.	PROTECT
T49	11+93.73	LT 30.2'	13"/CHINABERRY/UNK.	PROTECT
T50	11+97.64	LT 44.4'	11"/CHINABERRY/UNK.	PROTECT

FESTIVAL WAY

TREE TABLE				
NO.	STA.	OFFSET	DESCRIPTION CALIPER/SPECIES/CONDITION	NOTES
T51	12+06.73	LT 33.3'	10"/CHINABERRY/UNK.	PROTECT
T52	12+63.78	LT 51.1'	10"/OAK/UNK.	PROTECT
T53	12+63.39	LT 0.2'	16"/OAK/UNK.	REMOVE
T54	12+62.70	RT 27.3'	16"/OAK/UNK.	PROTECT
T55	12+62.06	RT 57.2'	16"/OAK/UNK.	PROTECT
T239	4+37.64	RT 79.6'	10"/HACKBERRY/POOR	PROTECT
T242	4+67.39	RT 79.6'	22"/MULBERRY/DEAD	PROTECT
T243	5+39.99	RT 70.8'	16"/HACKBERRY/FAIR	PROTECT
T244	5+35.55	RT 93.0'	16.5"/HACKBERRY/GOOD	PROTECT
T273	1+72.86	RT 42.0'	24"/SHUMARD OAK/GOOD	PROTECT
T274	1+93.67	RT 38.0'	17.5"/SHUMARD OAK/GOOD	PROTECT
T275	2+20.06	RT 38.2'	18"/SHUMARD OAK/GOOD	PROTECT
T276	2+46.84	RT 38.0'	12"/SHUMARD OAK/GOOD	PROTECT
T277	2+71.34	RT 39.1'	14"/SHUMARD OAK/GOOD	PROTECT
T279	3+19.78	RT 38.8'	18.5"/SHUMARD OAK/GOOD	PROTECT
T280	3+46.24	RT 38.3'	15.75"/SHUMARD OAK/GOOD	PROTECT
T281	3+65.20	RT 36.4'	14"/SHUMARD OAK/GOOD	PROTECT
T282	3+97.97	RT 38.4'	12"/SHUMARD OAK/FAIR	PROTECT
T283	4+24.77	RT 36.9'	16.25"/SHUMARD OAK/GOOD	PROTECT
T284	4+50.02	RT 34.8'	15.5"/SHUMARD OAK/GOOD	REMOVE
T285	4+74.19	RT 49.5'	15"/SHUMARD OAK/UNK.	PROTECT
T286	4+75.14	RT 37.1'	14.5"/SHUMARD OAK/GOOD	PROTECT
T287	5+25.55	RT 36.2'	15"/SHUMARD OAK/GOOD	PROTECT
T288	5+50.44	RT 37.0'	14.75"/SHUMARD OAK/GOOD	REMOVE
T289	5+76.64	RT 38.1'	13"/SHUMARD OAK/FAIR	PROTECT
T290	6+03.98	RT 29.1'	27"/SHUMARD OAK/GOOD	PROTECT
T291	6+66.52	RT 38.0'	16.5"/SHUMARD OAK/GOOD	PROTECT
T292	6+90.44	RT 37.7'	13.5"/SHUMARD OAK/GOOD	PROTECT
T293	7+17.90	RT 36.7'	15"/SHUMARD OAK/FAIR	PROTECT
T294	7+41.67	RT 37.0'	12"/SHUMARD OAK/GOOD	PROTECT
T295	7+67.06	RT 37.0'	18.75"/SHUMARD OAK/GOOD	PROTECT
T296	7+90.74	RT 36.0'	14.5"/SHUMARD OAK/GOOD	PROTECT
T297	8+14.75	RT 37.1'	15"/SHUMARD OAK/GOOD	PROTECT
T299	8+64.21	RT 36.8'	10.25"/SHUMARD OAK/FAIR	PROTECT
T300	8+89.50	RT 37.2'	14.25"/SHUMARD OAK/FAIR	PROTECT
T301	9+13.67	RT 35.9'	16.75"/SHUMARD OAK/GOOD	PROTECT
T302	9+39.80	RT 36.5'	14.5"/SHUMARD OAK/GOOD	PROTECT
T303	9+64.76	RT 36.8'	9.5"/SHUMARD OAK/GOOD	PROTECT
T304	9+91.04	RT 35.8'	10.5"/SHUMARD OAK/FAIR	PROTECT
T305	10+14.36	RT 37.0'	12"/SHUMARD OAK/FAIR	PROTECT
T306	10+41.09	RT 36.4'	11.5"/SHUMARD OAK/GOOD	PROTECT
T307	10+65.06	RT 36.8'	12.25"/SHUMARD OAK/GOOD	PROTECT
T308	10+93.73	RT 37.2'	13.5"/SHUMARD OAK/FAIR	PROTECT
T309	11+19.39	RT 36.9'	16"/SHUMARD OAK/GOOD	PROTECT
T310	11+68.97	RT 39.6'	15.5"/SHUMARD OAK/GOOD	PROTECT
T311	11+92.62	RT 36.9'	13.25"/SHUMARD OAK/GOOD	PROTECT
T312	12+18.09	RT 25.3'	24.75"/SHUMARD OAK/GOOD	PROTECT
T313	12+18.65	RT 50.2'	20.5"/SHUMARD OAK/GOOD	PROTECT

ACE ALLEY

TREE TABLE				
NO.	STA.	OFFSET	DESCRIPTION CALIPER/SPECIES/CONDITION	NOTES
T203	300+95.30	LT 59.9'	25.5"/CEDAR ELM/FAIR	PROTECT
T208	302+06.62	LT 62.2'	UNK./HACKBERRY/GONE	PROTECT
T214	302+31.48	LT 14.9'	21"/HACKBERRY/GOOD	REMOVE
T226	303+73.16	LT 86.0'	29"/ASH/FAIR	PROTECT
T227	303+49.68	LT 82.2'	8.5"/HACKBERRY/FAIR	PROTECT
T228	303+48.00	LT 82.8'	11.5"/HACKBERRY/GOOD	PROTECT
T229	303+19.78	LT 76.6'	11"/HACKBERRY/GOOD	PROTECT
T230	303+01.68	LT 54.7'	25"/ASH/GOOD	PROTECT
T231	302+89.42	LT 54.8'	16.5"/HACKBERRY/FAIR	PROTECT
T232	303+57.63	LT 39.6'	9.5"/HACKBERRY/GOOD	PROTECT
T233	303+67.88	LT 35.0'	9"/HACKBERRY/GOOD	PROTECT
T234	303+74.38	LT 21.4'	13"/HACKBERRY/GOOD	PROTECT
T235	303+92.81	LT 42.4'	20"/ASH/GOOD	PROTECT
T314	303+54.64	LT 8.7'	13.25"/HACKBERRY/GOOD	REMOVE
T315	303+33.50	RT 12.9'	22"/AMERICAN ELM/GOOD	REMOVE
T316	302+99.01	LT 11.7'	13.5"/HACKBERRY/GOOD	REMOVE
T317	302+66.11	LT 9.3'	11"/HACKBERRY/POOR	REMOVE
T319	303+35.84	RT 57.1'	20.5"/HACKBERRY/GOOD	PROTECT
T320	303+69.49	RT 77.9'	13.5"/PECAN/GOOD	PROTECT
T321	303+45.87	RT 78.8'	13.25"/PECAN/GOOD	PROTECT

JULIAN AVENUE

TREE TABLE				
NO.	STA.	OFFSET	DESCRIPTION CALIPER/SPECIES/CONDITION	NOTES
T26	104+81.00	LT 26.0'	17"/CRAPE MYRTLE/POOR	REMOVE
T100	100+81.73	LT 32.1'	UNK./UNK./UNK.	PROTECT
T236	103+44.82	LT 31.0'	16.5"/HACKBERRY/POOR	PROTECT
T245	104+69.44	RT 34.7'	20.5"/HACKBERRY/FAIR	PROTECT
T246	104+34.35	RT 23.6'	26.5"/ASH/POOR	PROTECT
T247	103+52.10	RT 38.6'	25"/AMERICAN ELM/FAIR	PROTECT
T248	103+48.90	RT 41.5'	10.75"/ASH/POOR	PROTECT
T249	103+60.17	RT 89.1'	21.5"/HACKBERRY/POOR	PROTECT
T250	103+57.81	RT 87.4'	UNK./UNK./UNK.	PROTECT
T270	104+68.76	RT 94.4'	17"/HACKBERRY/POOR	PROTECT
T271	104+70.88	RT 74.9'	11.5"/HACKBERRY/FAIR	PROTECT
T272	104+69.08	RT 54.8'	11"/HACKBERRY/POOR	PROTECT
T323	100+95.45	LT 31.0'	23"/HACKBERRY/POOR	REMOVE
T324	100+99.61	LT 30.4'	12.5"/HACKBERRY/GOOD	REMOVE
T325	101+18.74	LT 28.3'	16.5"/HACKBERRY/POOR	PROTECT
T360	104+01.41	RT 69.2'	25"/AMERICAN ELM/UNK.	PROTECT
T361	103+92.51	RT 97.6'	21"/ASH/UNK.	PROTECT
T363	102+44.89	LT 33.1'	14"/MULBERRY/UNK.	PROTECT

ARAPAHO ROAD

TREE TABLE				
NO.	STA.	OFFSET	DESCRIPTION CALIPER/SPECIES/CONDITION	NOTES
T331	105+52.33	LT 15.1'	19.5"/SHUMARD OAK/GOOD	PROTECT
T332	105+22.01	LT 15.1'	17.5"/SHUMARD OAK/GOOD	PROTECT
T333	104+92.26	LT 14.9'	16.5"/SHUMARD OAK/GOOD	PROTECT
T334	104+62.19	LT 15.0'	12.75"/SHUMARD OAK/POOR	PROTECT
T335	104+32.24	LT 14.9'	16.5"/SHUMARD OAK/GOOD	PROTECT
T336	104+02.63	LT 14.9'	15.5"/SHUMARD OAK/GOOD	PROTECT
T337	103+72.97	LT 15.1'	16"/SHUMARD OAK/GOOD	PROTECT
T338	103+43.01	LT 14.7'	13"/SHUMARD OAK/GOOD	PROTECT
T339	103+13.80	LT 14.7'	19.25"/SHUMARD OAK/GOOD	PROTECT
T1000	107+05.20	LT 16.4'	18"/OAK/UNK.	PROTECT
T4000	100+34.00	LT 23.1'	14"/SHUMARD OAK/UNK.	PROTECT
T4005	100+66.14	LT 17.6'	13"/SHUMARD OAK/UNK.	PROTECT
T4006	100+77.39	LT 33.1'	15"/SHUMARD OAK/UNK.	PROTECT
T4007	100+96.29	LT 14.5'	17"/SHUMARD OAK/UNK.	PROTECT
T4009	101+22.38	LT 78.8'	15"/LIVE OAK/UNK.	PROTECT
T4010	101+26.48	LT 100.2'	16"/LIVE OAK/UNK.	PROTECT
T4018	101+83.49	LT 103.9'	14"/SHUMARD OAK/UNK.	PROTECT
T4019	101+83.49	LT 86.2'	14"/SHUMARD OAK/UNK.	PROTECT
T4020	101+77.06	LT 77.4'	20"/SHUMARD OAK/UNK.	PROTECT
T4021	101+83.49	LT 59.4'	15"/SHUMARD OAK/UNK.	PROTECT
T4480	102+50.93	LT 81.6'	24"/SHUMARD OAK/UNK.	PROTECT
T4481	102+55.45	LT 106.7'	15"/SHUMARD OAK/UNK.	PROTECT

SPECTRUM DRIVE

TREE TABLE				
NO.	STA.	OFFSET	DESCRIPTION CALIPER/SPECIES/CONDITION	NOTES
T326	5+22.87	LT 21.4'	11"/SHUMARD OAK/DEAD	PROTECT
T327	4+80.39	LT 18.7'	13"/SHUMARD/OAK/DEAD	REMOVE
T328	4+14.00	LT 22.3'	7.5"/SHUMARD OAK/GOOD	PROTECT
T348	4+76.77	RT 24.5'	17.5"/SHUMARD OAK/GOOD	PROTECT
T349	4+11.96	RT 24.8'	17.5"/SHUMRAD OAK/GOOD	PROTECT

NOTES:

UNK. = UNKNOWN

Plotted By: Mercedes, Joseph November 06, 2026 - 02:18:21pm C:\ACC\ACCDocs\Kimley-Horn\438341265-ADDISON_JUNCTION PUBLIC\Project Files\CAD\PlanSheet\REMOVALS_-_FESTIVAL_WAY.dwg
This document, together with the concepts and designs presented herein, as an instrument of service, is intended only for the specific purpose and client for which it was prepared. Reuse of and improper reliance on this document without written authorization and adaptation by Kimley-Horn and Associates, Inc. shall be without liability to Kimley-Horn and Associates, Inc.

PROJECT NO. C00057/ BID NO. 27-31

No.	REVISIONS	DATE	BY

Kimley»Horn
225 E. JOHN W. CARPENTER FREEWAY SUITE 1100
IRVING, TX 75062
PHONE: 214.489.6900
WWW.KIMLEY-HORN.COM
© 2026 KIMLEY-HORN AND ASSOCIATES, INC.
TEXAS REGISTERED ENGINEERING FIRM #F-928

11/06/2026



KHA PROJECT 063543066
DATE 11/06/2026
SCALE AS SHOWN
DESIGNED BY KCH
DRAWN BY ZMZ
CHECKED BY FLS

ADDISON
ADDISON JUNCTION PUBLIC INFRASTRUCTURE IMPROVEMENTS

REMOVALS TREE TABLE

SHEET NUMBER
22

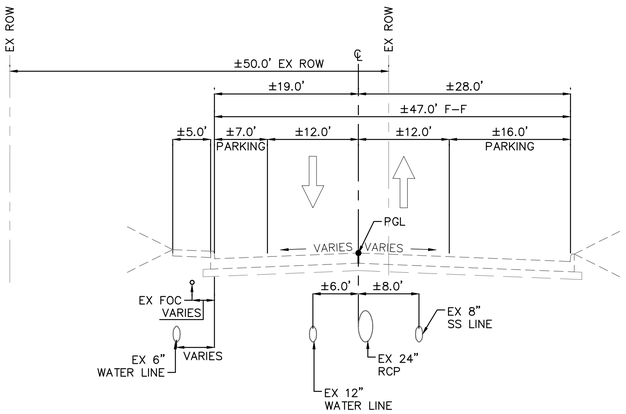

EXISTING 2-LANE CONCRETE W/ ON STREET PARKING
FESTIVAL WAY

STA 1+84 TO STA 3+05
STA 4+24 TO STA 4+97
STA 6+30TO STA 7+03
STA 8+51 TO STA 8+99
STA 9+96 TO STA 11+40

1
23

SCALE: AS DIMENSIONED

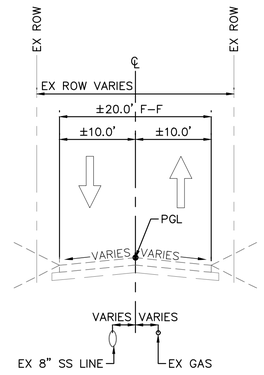

EXISTING 2-LANE ASPHALT
ACE ALLEY

STA 300+44 TO STA 303+17

2
23

SCALE: AS DIMENSIONED

No.	REVISIONS	DATE	BY

PROJECT NO. C00057/ BID NO. 27-31

Kimley»Horn
225 E. JOHN W. CARPENTER FREEWAY SUITE 1100
IRVING, TX 75062
PHONE: 214.489.6500
WWW.KIMLEY-HORN.COM
© 2026 KIMLEY-HORN AND ASSOCIATES, INC.
TEXAS REGISTERED ENGINEERING FIRM #F-928

11/06/2026

STATE OF TEXAS
L. NATHAN ANTE
96866
LICENSED
PROFESSIONAL ENGINEER

L. Nathan Ante

KHA PROJECT 063543066
DATE 11/06/2026
SCALE AS SHOWN
DESIGNED BY KCH
DRAWN BY ZMZ
CHECKED BY FLS

ADDISON
ADDISON JUNCTION
PUBLIC
INFRASTRUCTURE
IMPROVEMENTS

EXISTING TYPICAL SECTIONS

SHEET NUMBER
23

Plotted By: Mcmay, Jarrett November 06, 2026 01:40:55pm G:\ACD\ACDData\Vine-Horn\063543066-ADDISON JUNCTION PUBLIC\Project Files\CADD\PlanSheet\Typical Sections.dwg
This document, together with the concepts and designs presented herein, as an instrument of service, is intended only for the specific purpose and client for which it was prepared. Reuse of and improper reliance on this document without written authorization and adaptation by Kimley-Horn and Associates, Inc. shall be without liability to Kimley-Horn and Associates, Inc.

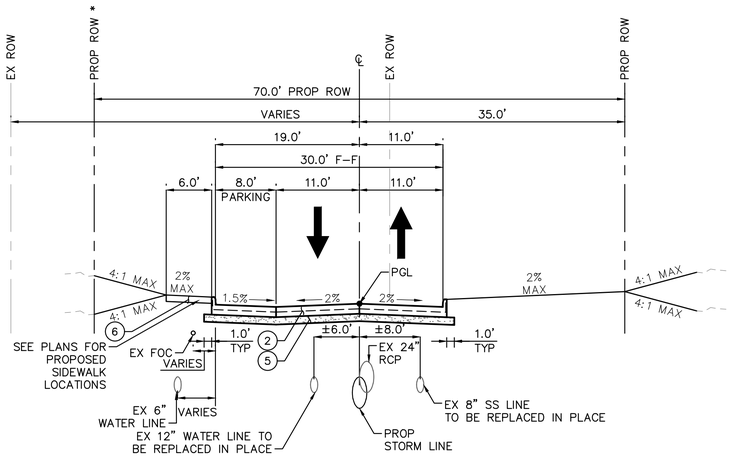

PROPOSED 2-LANE CONCRETE W/ ON STREET PARKING FESTIVAL WAY

STA 2+09 TO STA 3+05
STA 3+29 TO STA 3+77
STA 4+25 TO STA 4+73
STA 6+59 TO STA 7+08
STA 8+51 TO STA 9+00 *
STA 9+95 TO STA 10+68 *
STA 10+91 TO STA 11+40 *

1 / 24

SCALE: AS DIMENSIONED

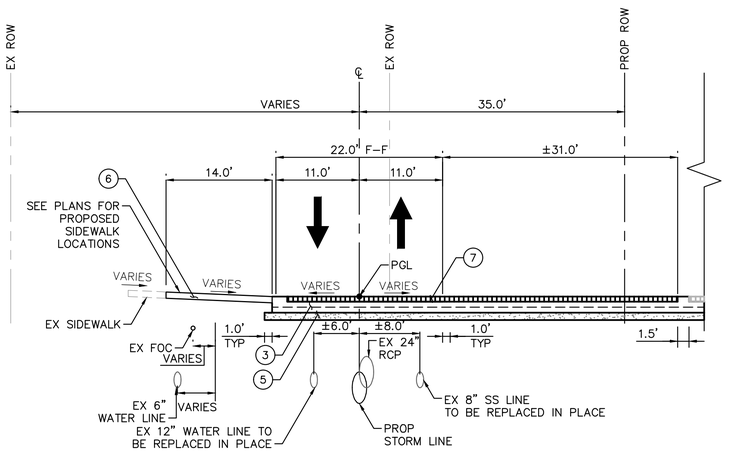

PROPOSED 2-LANE CONCRETE RAISED TABLE FESTIVAL WAY

STA 5+56 TO STA 5+77

2 / 24

SCALE: AS DIMENSIONED

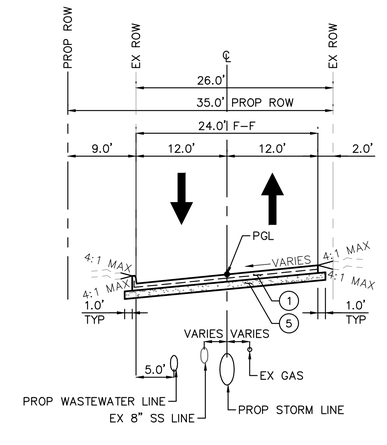

PROPOSED 2-LANE CONCRETE ACE ALLEY

STA 300+45 TO STA 304+18

3 / 24

SCALE: AS DIMENSIONED

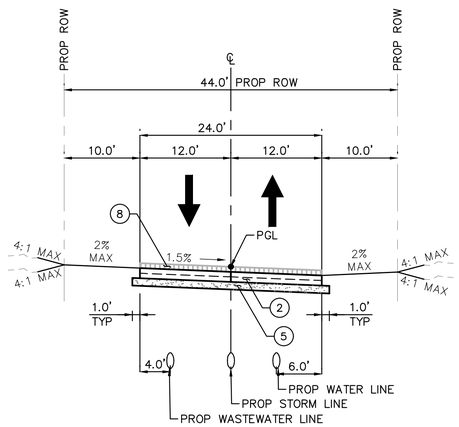

PROPOSED 2-LANE CONCRETE JULIAN AVE

STA 102+06 TO 105+56

4 / 24

SCALE: AS DIMENSIONED

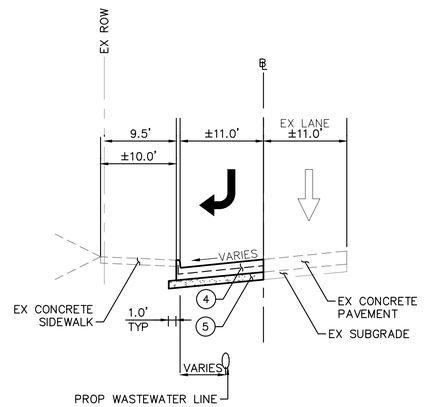

PROPOSED WESTBOUND RIGHT TURN LANE ARAPAHO ROAD

STA 102+66 to STA 105+21

5 / 24

SCALE: AS DIMENSIONED

LEGEND:

1. 6" CONCRETE PAVEMENT W/ 6" MONO CURB WHERE SHOWN (STREET) MIN. 4000 PSI 28-DAY COMPRESSIVE STRENGTH REINFORCING STEEL SHALL BE #3 REBAR (3/8") ON 18" CENTERS (RE: TOWN DETAIL SD-P22) (RE: GENERAL NOTES SECTION 2.4)
2. 8" CONCRETE PAVEMENT W/ 6" MONO CURB WHERE SHOWN (STREET) MIN. 4000 PSI 28-DAY COMPRESSIVE STRENGTH REINFORCING STEEL SHALL BE #3 REBAR (3/8") ON 18" CENTERS (RE: (RE: TOWN DETAIL SD-P02)(RE: GENERAL NOTES SECTION 2.4)
3. 8" CONCRETE PAVEMENT W/ DROP SLAB (STREET) MIN. 4000 PSI 28-DAY COMPRESSIVE STRENGTH REINFORCING STEEL SHALL BE #3 REBAR (3/8") ON 18" CENTERS (RE: (RE: TOWN DETAIL SD-P22)(RE: GENERAL NOTES SECTION 2.4)
4. 10" CONCRETE PAVEMENT W/ 6" MONO CURB WHERE SHOWN (STREET) MIN. 4000 PSI 28-DAY COMPRESSIVE STRENGTH REINFORCING STEEL SHALL BE #4 REBAR (4/8") ON 18" CENTERS (RE: TOWN DETAIL SD-P22) (RE: GENERAL NOTES SECTION 2.4)
5. 6" LIME STABILIZED SUBGRADE SHALL BE COMPACTED TO A DENSITY OF NO LESS THAN 95% AND SHALL BE STABILIZED W/ AT LEAST 30 LBS./SY OF HYDRATED LIME. LAB TEST MUST BE SUBMITTED TO TOWN FOR APPROVAL TO DETERMINE AMOUNT OF LIME REQUIRED OR MAY BE WAIVED IF 36 LBS./SY OF LIME IS USED.
6. 5" CONCRETE SIDEWALK W/ REINFORCING STEEL REINFORCING STEEL SHALL BE #3 REBAR (3/8") ON 18" CENTERS (RE: TOWN DETAILS SD-P26) (RE: GENERAL NOTES SECTION 2.4)
7. 4" VEHICULAR PAVERS
8. FUTURE 4" VEHICULAR PAVERS

LISTING OF ABBREVIATIONS:

PROP = PROPOSED
EX = EXISTING
ROW = RIGHT-OF-WAY
℄ = CENTER LINE
BL = BOUNDARY LINE
F-F = FACE TO FACE
PGL = PROFILE GRADE LINE (TOP OF FINISHED GRADE)

NOTES:

1. ALL PAVEMENT DIMENSIONS SHOWN ARE TO FACE OF CURB. LIME STABILIZED SUBGRADE IS MEASURED 12" BEYOND BACK OF CURB.
2. TYPICAL SECTIONS ARE APPROXIMATE. REFER TO PLAN SHEETS FOR STATIONING AND LIMITS.
3. DIMENSIONS GIVEN FOR PARKWAY WIDTHS ARE TYPICAL, BUT VARY IN LOCATIONS. REFER TO PLAN SHEETS FOR PARKWAY WIDTHS.
4. PGL REPRESENTS FINISHED ELEVATION ALONG CENTER LINE. WHERE FUTURE PAVERS ARE PROPOSED, PGL REPRESENTS TOP OF PAVERS AT CENTER LINE.
5. REFER TO TOWN STANDARD CONSTRUCTION DETAILS FOR ADDITIONAL REQUIREMENTS.
6. REFER TO GEOTECH REPORT PREPARED BY ECS SOUTHWEST, LLP (PROJECT NO. 19:10552) DATED NOVEMBER 9, 2026 FOR PAVEMENT AND SUBGRADE DESIGN REQUIREMENTS. THE MORE STRINGENT DESIGN BETWEEN THE TOWN AND GEOTECH SHALL BE APPLIED.

CROSS SLOPES – FESTIVAL WAY	
CROSS SLOPE SIGN CONVENTION: LT (+) 0% ℄ (+) RT 0%; (–) (–)	NOTE: CROSS SLOPES MAY VARY AT SOME LOCATIONS DUE TO VARIANCE IN PAVEMENT WIDTHS AND INTERSECTION TRANSITIONS
CROSS SLOPES – LEFT SIDE	
LIMITS	TRANSITION CROSS SLOPE (FROM X.XX% TO X.XX%)
BEGIN TO STA 1+62.42	+0.60%± TO –2.00%
STA 1+62.42 TO STA 11+79.88	–2.00%
STA 11+79.88 TO END	–2.00% TO –1.50%±
CROSS SLOPES – RIGHT SIDE	
LIMITS	TRANSITION CROSS SLOPE (FROM X.XX% TO X.XX%)
BEGIN TO STA 1+62.42	–0.60%± TO –2.00%
STA 1+62.42 STA 4+86.50	–2.00%
STA 4+86.50 TO STA 5+06.50	–2.00% TO –1.00%
STA 5+06.50 TO STA 6+08.50	–1.00%
STA 6+08.50 TO STA 6+28.50	–1.00% TO –2.00%
STA 6+28.50 TO STA 11+79.88	–2.00%
STA 11+79.88 TO END	–2.00% TO +1.50%±
CROSS SLOPES – JULIAN AVENUE	
CROSS SLOPES – LEFT SIDE	
LIMITS	TRANSITION CROSS SLOPE (FROM X.XX% TO X.XX%)
BEGIN TO STA 100+72	+3.00%
STA 100+72 TO STA 101+55	+3.00% TO +1.50%
STA 101+55 TO STA 105+00	+1.50%
STA 105+00 TO STA 105+25	+1.50% TO +1.20%
STA 105+25 TO END	+1.20%
CROSS SLOPES – RIGHT SIDE	
LIMITS	TRANSITION CROSS SLOPE (FROM X.XX% TO X.XX%)
BEGIN TO STA 100+72	–3.00%
STA 100+72 TO STA 101+55	–3.00% TO –1.50%
STA 101+55 TO STA 105+00	–1.50%
STA 105+00 TO STA 105+25	–1.50% TO –1.20%
STA 105+25 TO END	–1.20%

CROSS SLOPES – ACE ALLEY	
CROSS SLOPES – LEFT SIDE	
LIMITS	TRANSITION CROSS SLOPE (FROM X.XX% TO X.XX%)
BEGIN TO STA 300+52.36	+0.80%± TO +1.00%
STA 300+52.36 TO STA 300+70	+1.00%
STA 300+70 TO STA 301+30	+1.00% TO –2.00%
STA 301+30 TO STA 302+00	–2.00%
STA 302+00 TO STA 302+50	–2.00% TO –1.00%
STA 302+50 TO STA 303+25	–1.00%
STA 303+25 TO STA 304+00	–1.00% TO +1.30%
STA 304+00 TO END	+1.30%
CROSS SLOPES – RIGHT SIDE	
LIMITS	TRANSITION CROSS SLOPE (FROM X.XX% TO X.XX%)
BEGIN TO STA 300+52.36	–0.80%± TO –1.00%
STA 300+52.36 TO STA 300+70	–1.00%
STA 300+70 TO STA 301+30	–1.00% TO +2.00%
STA 301+30 TO STA 302+00	+2.00%
STA 302+00 TO STA 302+50	+2.00% TO +1.00%
STA 302+50 TO STA 303+25	+1.00%
STA 303+25 TO STA 304+00	+1.00% TO –1.30%
STA 304+00 TO END	–1.30%

No.	REVISIONS	DATE	BY

PROJECT NO. C00057/ BID NO. 27-31

Kimley»Horn
225 E. JOHN W. CARPENTER FREEWAY SUITE 1100
IRVING, TX 75062
PHONE: 214-565-0030
WWW.KIMLEY-HORN.COM
© 2026 KIMLEY-HORN AND ASSOCIATES, INC.
TEXAS REGISTERED ENGINEERING FIRM #F-928

11/06/2026

STATE OF TEXAS
L. NATHAN ANTE
96866
REGISTERED
PROFESSIONAL ENGINEER

KHA PROJECT 063543066	DATE 11/06/2026	SCALE AS SHOWN	DESIGNED BY KCH	DRAWN BY ZMZ	CHECKED BY FLS

ADDISON
ADDISON JUNCTION PUBLIC INFRASTRUCTURE IMPROVEMENTS

PROPOSED TYPICAL SECTIONS

SHEET NUMBER
24

Plotted By: Zmetti, Zach - November 10, 2026 - 07:32:09pm C:\ACC\ACCDocs\Kimley-Horn\063543066-ADDISON JUNCTION PUBLIC\Project Files\CAD\Plan Sheets\Typical Sections.dwg
This document, together with the concepts and designs presented herein, as an instrument of service, is intended only for the specific purpose and client for which it was prepared. Reuse of and improper reliance on this document without written authorization and adaptation by Kimley-Horn and Associates, Inc. shall be without liability to Kimley-Horn and Associates, Inc.

Printed By: Mercado, Joseph, November 06, 2026 - 01:41:07pm C:\ACC\ACCDocs\Kimley-Horn\238443956 - ADDISON PUBLIC\Project Files\CAD\PlanSheet\TRAFFIC CONTROL NARRATIVE.dwg
This document, together with the concepts and designs presented herein, as an instrument of service, is intended only for the specific purpose and client for which it was prepared. Reuse of and improper reliance on this document without written authorization and adaptation by Kimley-Horn and Associates, Inc. shall be without liability to Kimley-Horn and Associates, Inc.

GENERAL CONSTRUCTION SEQUENCING REQUIREMENTS

1. CONTRACTOR SHALL COORDINATE AND SEQUENCE ALL WATER, WASTEWATER, STORM DRAIN, PAVING, AND TRAFFIC CONTROL WORK TO MAINTAIN REQUIRED UTILITY SERVICE AND ACCESS THROUGHOUT CONSTRUCTION.
2. CONTRACTOR SHALL VERIFY THE HORIZONTAL AND VERTICAL LOCATION OF ALL EXISTING UTILITIES PRIOR TO CONSTRUCTION. ALL COSTS ASSOCIATED WITH UTILITY LOCATION AND VERIFICATION SHALL BE SUBSIDIARY TO THE ASSOCIATED WORK.
3. TEMPORARY WATER FACILITIES SHALL BE INSTALLED, TESTED, DISINFECTED, AND PLACED IN SERVICE PRIOR TO REMOVAL, ABANDONMENT, OR SHUTDOWN OF EXISTING WATER FACILITIES WHERE REQUIRED TO MAINTAIN WATER SERVICE.
4. CONTRACTOR SHALL COORDINATE ALL WATER SHUTDOWNS, VALVE OPERATIONS, CONNECTIONS, TESTING, DISINFECTION, AND RETURN-TO-SERVICE ACTIVITIES WITH THE TOWN. EXISTING WATER FACILITIES SHALL NOT BE REMOVED FROM SERVICE UNTIL AUTHORIZED BY THE TOWN.
5. CONTRACTOR SHALL MAINTAIN WASTEWATER SERVICE THROUGHOUT CONSTRUCTION. BYPASS PUMPING OR OTHER TEMPORARY FACILITIES SHALL BE PROVIDED AS REQUIRED.
6. EXISTING UTILITIES SHALL REMAIN IN SERVICE UNTIL ASSOCIATED PROPOSED OR TEMPORARY FACILITIES ARE READY FOR SERVICE, UNLESS OTHERWISE APPROVED BY THE TOWN.
7. CONTRACTOR SHALL SEQUENCE UTILITY INSTALLATION TO MINIMIZE OPEN EXCAVATIONS AND AVOID CONFLICTS BETWEEN CONCURRENT CONSTRUCTION OPERATIONS.
8. FINAL PAVEMENT REPLACEMENT SHALL NOT BEGIN UNTIL UNDERLYING UTILITY WORK WITHIN THE APPLICABLE AREA HAS BEEN COMPLETED, TESTED, ACCEPTED, AND BACKFILLED.
9. THE SEQUENCING SHOWN HEREIN ESTABLISHES THE MINIMUM REQUIRED ORDER OF OPERATIONS. CONTRACTOR SHALL SUBMIT PROPOSED MODIFICATIONS TO THE CONSTRUCTION SEQUENCING AND TRAFFIC CONTROL PLAN TO THE TOWN FOR REVIEW AND APPROVAL PRIOR TO IMPLEMENTATION.

CONSTRUCTION PHASING NARRATIVE

PHASE 1 CONSTRUCTION (FESTIVAL WAY, JULIAN AVENUE, QUORUM DRIVE, WESTBOUND ACE ALLEY)

CONSTRUCTION OF PROPOSED CONCRETE PAVEMENT AND SUBGRADE, SIDEWALKS AND CURB RAMPS, DRAINAGE INFRASTRUCTURE, WATER/WASTEWATER INFRASTRUCTURE, AND ILLUMINATION/FIBER CONDUITS SHALL BE PERFORMED DURING PHASE 1 ALONG THE CENTERLINES OF FESTIVAL WAY, JULIAN AVENUE, AND WESTBOUND ACE ALLEY.

1. CLOSE FESTIVAL WAY FROM ADDISON ROAD TO QUORUM DRIVE AND ACE ALLEY FROM ADDISON ROAD TO JULIAN AVENUE.
2. MAINTAIN ONE SOUTHBOUND LANE AND ONE NORTHBOUND LANE OF QUORUM DRIVE.
3. IMPLEMENT PHASE 1 TRAFFIC CONTROL AND INSTALL EROSION AND SEDIMENTATION CONTROL BEST MANAGEMENT PRACTICES REQUIRED FOR PAVING, STORM DRAIN, AND WATER/WASTEWATER IMPROVEMENTS.
4. PERFORM SITE PREPARATION AND REMOVALS AS INDICATED IN THE PLANS.
5. CONSTRUCT PERMANENT DRAINAGE INFRASTRUCTURE WITHIN FESTIVAL WAY, JULIAN AVENUE, AND ACE ALLEY.
6. CONSTRUCT PERMANENT WASTEWATER INFRASTRUCTURE WITHIN FESTIVAL WAY, JULIAN AVENUE, AND ACE ALLEY.
7. CONSTRUCT PERMANENT WATER INFRASTRUCTURE WITHIN FESTIVAL WAY, JULIAN AVENUE, AND ACE ALLEY.
8. CONSTRUCT AND INSTALL ILLUMINATION/FIBER CONDUITS ALONG THE PARKWAY OF FESTIVAL WAY.
9. CONSTRUCT PROPOSED SUBGRADE, CONCRETE PAVEMENT, SIDEWALKS, AND CURB RAMPS ALONG THE CENTERLINES OF FESTIVAL WAY, JULIAN AVENUE, AND ACE ALLEY.
10. REMOVE TEMPORARY TRAFFIC CONTROL MEASURES.
11. OPEN FESTIVAL WAY, JULIAN AVENUE, AND WESTBOUND ACE ALLEY TO TRAFFIC.

PHASE 2 CONSTRUCTION (EASTBOUND ACE ALLEY)

CONSTRUCTION OF PROPOSED CONCRETE PAVEMENT AND SUBGRADE, SIDEWALKS AND CURB RAMPS, AND DRAINAGE INFRASTRUCTURE ALONG NORTHBOUND SPECTRUM DRIVE SHALL BE PERFORMED DURING PHASE 2.

1. CLOSE EASTBOUND ACE ALLEY FROM ADDISON ROAD TO JULIAN AVENUE.
2. IMPLEMENT PHASE 2 TRAFFIC CONTROL AND INSTALL EROSION AND SEDIMENTATION CONTROL BEST PRACTICES REQUIRED FOR PAVING, STORM DRAIN, AND WATER/WASTEWATER IMPROVEMENTS.
3. PERFORM SITE PREPARATION AND REMOVALS AS INDICATED IN THE PLANS.
4. CONSTRUCT PERMANENT DRAINAGE INFRASTRUCTURE ALONG EASTBOUND ACE ALLEY.
5. CONSTRUCT PERMANENT WASTEWATER INFRASTRUCTURE ALONG EASTBOUND ACE ALLEY.
6. CONSTRUCT SUBGRADE AND CONCRETE PAVEMENT ALONG EASTBOUND ACE ALLEY.
7. RE-ESTABLISH LANDSCAPING IN DISTURBED AREAS ADJACENT TO THE CONSTRUCTION AREA AND REMOVE TEMPORARY TRAFFIC CONTROL MEASURES.
8. OPEN EASTBOUND ACE ALLEY TO TRAFFIC.

PHASE 1 THROUGH PHASE 7 CONSTRUCTION (ARAPAHO ROAD AND SPECTRUM DRIVE)

CONSTRUCTION OF PROPOSED CONCRETE PAVEMENT AND SUBGRADE, SIDEWALKS, AND WATER/WASTEWATER INFRASTRUCTURE ALONG ARAPAHO ROAD AND SPECTRUM DRIVE SHALL BE PERFORMED DURING PHASES 1 THROUGH 7.

1. CLOSE AFFECTED LANES OF ARAPAHO ROAD AND SPECTRUM DRIVE IN ACCORDANCE WITH THE APPROVED TRAFFIC CONTROL PLAN.
2. IMPLEMENT TRAFFIC CONTROL AND REQUIRED EROSION AND SEDIMENTATION CONTROL MEASURES.
3. PERFORM SITE PREPARATION AND REMOVALS AS INDICATED IN THE PLANS.
4. CONSTRUCT PROPOSED WATER AND WASTEWATER INFRASTRUCTURE IMPROVEMENTS.
5. CONSTRUCT PROPOSED SUBGRADE, CONCRETE PAVEMENT, AND SIDEWALKS.
6. RESTORE LANDSCAPING AND OTHER DISTURBED AREAS AND REMOVE TEMPORARY TRAFFIC CONTROL MEASURES.
7. OPEN AFFECTED LANES TO TRAFFIC.
8. PROCEED TO THE SUBSEQUENT PHASE.

811 Know what's **below.** **Call** before you dig.

No.	REVISIONS	DATE	BY

PROJECT NO. C000057/ BID NO. 27-31

Kimley»Horn
225 E. JOHN W. CARPENTER FREEWAY SUITE 1100
IRVING, TX 75062
PHONE: 214.565.0660
WWW.KIMLEY-HORN.COM
© 2026 KIMLEY-HORN AND ASSOCIATES, INC.
TEXAS REGISTERED ENGINEERING FIRM #F-928

11/06/2026

STATE OF TEXAS
L. NATHAN ANTE
96866
LICENSED
PROFESSIONAL ENGINEER

L. Nathan Ante

KHA PROJECT 063543066
DATE 11/06/2026
SCALE AS SHOWN
DESIGNED BY KCH
DRAWN BY ZMZ
CHECKED BY FLS

ADDISON
ADDISON JUNCTION PUBLIC INFRASTRUCTURE IMPROVEMENTS

CONSTRUCTION PHASING TRAFFIC CONTROL NARRATIVE

SHEET NUMBER
25

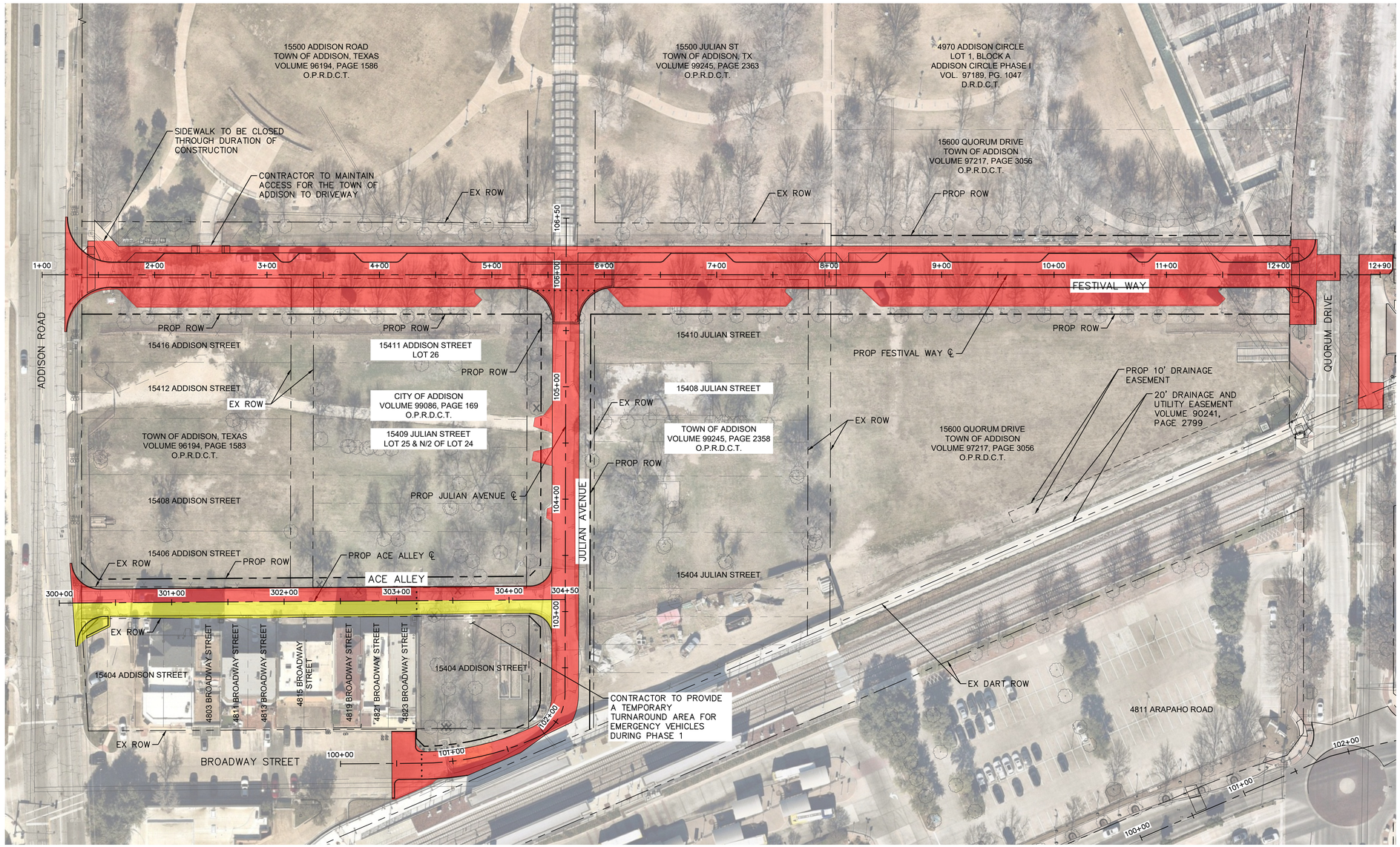

NORTH

GRAPHIC SCALE IN FEET
0 25 50 100

LEGEND

PHASE 1

PHASE 2

NOTES

1. CONTRACTOR TO PHASE INTERSECTIONS TO MAINTAIN TWO-WAY TRAFFIC AT ALL TIMES.
2. CONTRACTOR TO PHASE ACE ALLEY TO MAINTAIN ACCESS AT ALL TIMES.

Know what's below.
Call before you dig.

No.	REVISIONS	DATE	BY

PROJECT NO. C00057/ BID NO. 27-31

Kimley»Horn
225 E. JOHN W. CARPENTER FREEWAY SUITE 1100
IRVING, TX 75062
PHONE: 214-565-0660
WWW.KIMLEY-HORN.COM

© 2026 KIMLEY-HORN AND ASSOCIATES, INC.

TEXAS REGISTERED ENGINEERING FIRM #F-928

11/06/2026

STATE OF TEXAS
L. NATHAN ANTE
96866
LICENSED
PROFESSIONAL ENGINEER

L. Nathan Ante

KHA PROJECT	DATE	SCALE	DESIGNED BY	DRAWN BY	CHECKED BY
063543066	11/06/2026	AS SHOWN	KCH	ZMZ	FLS

ADDISON
ADDISON JUNCTION PUBLIC INFRASTRUCTURE IMPROVEMENTS

CONSTRUCTION PHASING
SHEET 1 OF 2

SHEET NUMBER
26

Plotted By: Morrison, Joseph November 06, 2026 01:41:24pm C:\AC\ACDocs\Kimley-Horn\063543066-ADDISON JUNCTION PUBLIC\Drafting\Plans\ADDISON_CONTROL PLAN - FESTIVAL WAY.dwg
This set of plans and specifications and the concepts and designs presented therein, as an instrument of service, is intended only for the specific purpose and client for which it was prepared. Reuse of and improper reliance on this document without written authorization and adaptation by Kimley-Horn and Associates, Inc. shall be without liability to Kimley-Horn and Associates, Inc.

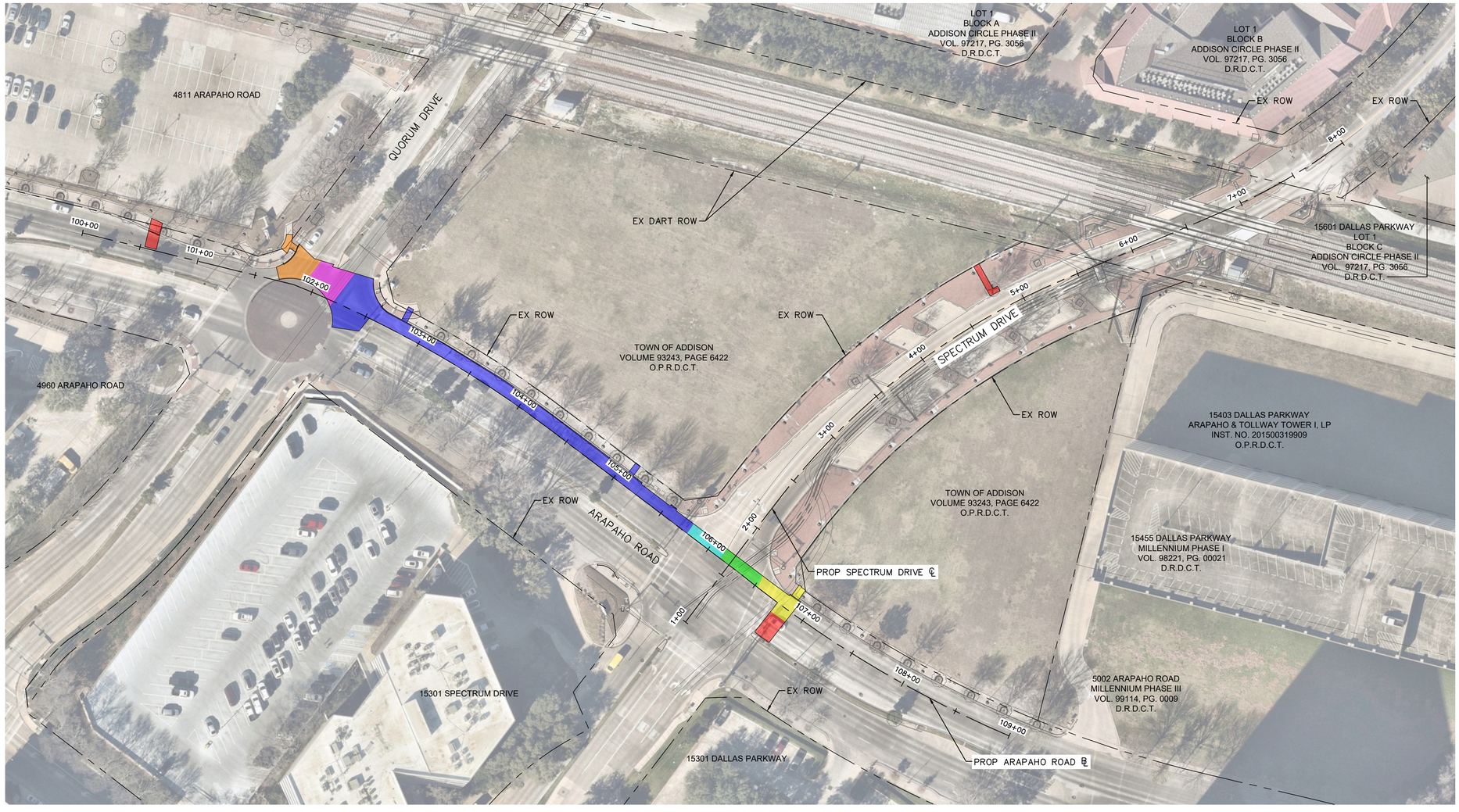

NORTH

GRAPHIC SCALE IN FEET
0 25 50 100

LEGEND

- PHASE 1
- PHASE 2
- PHASE 3
- PHASE 4
- PHASE 5
- PHASE 6
- PHASE 7

NOTES

1. CONTRACTOR TO PHASE INTERSECTIONS TO MAINTAIN TWO-WAY TRAFFIC AT ALL TIMES.
2. CONTRACTOR TO PHASE ACE ALLEY TO MAINTAIN ACCESS AT ALL TIMES.

Know what's **below.**
Call before you dig.

No.	REVISIONS	DATE	BY

PROJECT NO. C00057/ BID NO. 27-31

Kimley»Horn
225 E. JOHN W. CARPENTER FREEWAY SUITE 1100
IRVING, TX 75062
PHONE: 214.565.0660
WWW.KIMLEY-HORN.COM

© 2026 KIMLEY-HORN AND ASSOCIATES, INC.

TEXAS REGISTERED ENGINEERING FIRM #F-928

11/06/2026

STATE OF TEXAS
L. NATHAN ANTE
96866
LICENSED
PROFESSIONAL ENGINEER

KHA PROJECT 063543066	DATE 11/06/2026	SCALE AS SHOWN	DESIGNED BY KCH	DRAWN BY ZMZ	CHECKED BY FLS

ADDISON
ADDISON JUNCTION
PUBLIC
INFRASTRUCTURE
IMPROVEMENTS

CONSTRUCTION
PHASING
SHEET 2 OF 2

SHEET NUMBER
27

Plotted By: Mercer, Joseph November 06, 2026 01:41:31pm D:\ACS\ACSDocs\Workspace\063543066-ADDISON PUBLIC\Project Files\04-DESIGN\Sheets\TRAFFIC CONTROL PLAN - FESTIVAL WAY.dwg
This document, together with the concepts and designs presented herein, as an instrument of service, is intended only for the specific purpose and client for which it was prepared. Reuse of and improper reliance on this document without written authorization and adaptation by Kimley-Horn and Associates, Inc. shall be without liability to Kimley-Horn and Associates, Inc.

DISCLAIMER:
The use of this standard is governed by the "Texas Engineering Practice Act". No warranty of any kind is made by TxDOT for any purpose whatsoever. TxDOT assumes no responsibility for the conversion of this standard to other formats or for incorrect results or damages resulting from its use.

DATE:
FILE:

BARRICADE AND CONSTRUCTION (BC) STANDARD SHEETS GENERAL NOTES:

1. The Barricade and Construction Standard Sheets (BC sheets) are intended to show typical examples for placement of temporary traffic control devices, construction pavement markings, and typical work zone signs. The information contained in these sheets meet or exceed the requirements shown in the "Texas Manual on Uniform Traffic Control Devices" (TMUTCD).

2. The development and design of the Traffic Control Plan (TCP)is the responsibility of the Engineer.

3. The Contractor may propose changes to the TCP that are signed and sealed by a licensed professional engineer for approval. The Engineer may develop, sign and seal Contractor proposed changes.

4. The Contractor is responsible for installing and maintaining the traffic control devices as shown in the plans. The Contractor may not move or change the approximate location of any device without the approval of the Engineer.

5. Geometric design of lane shifts and detours should, when possible, meet the applicable design criteria contained in manuals such as the American Association of State Highway and Transportation Officials (AASHTO), "A Policy on Geometric Design of Highways and Streets," the TxDOT "Roadway Design Manual" or engineering judgment.

6. When projects abut, the Engineer(s) may omit the END ROAD WORK, TRAFFIC FINES DOUBLE, and other advance warning signs if the signing would be redundant and the work areas appear continuous to the motorists. If the adjacent project is completed first, the Contractor shall erect the necessary warning signs as shown on these sheets, the TCP sheets or as directed by the Engineer. The BEGIN ROAD WORK NEXT X MILES sign shall be revised to show appropriate work zone distance.

7. The Engineer may require duplicate warning signs on the median side of divided highways where median width will permit and traffic volumes justify the signing.

8. All signs shall be constructed in accordance with the details found in the "Standard Highway Sign Designs for Texas," latest edition. Sign details not shown in this manual shall be shown in the plans or the Engineer shall provide a detail to the Contractor before the sign is manufactured.

9. The temporary traffic control devices shown in the illustrations of the BC sheets are examples. As necessary, the Engineer will determine the most appropriate traffic control devices to be used.

10. Where highway construction or maintenance work is being undertaken, other than mobile operations as defined by the Texas Manual on Uniform Traffic Control Devices, CSJ limit signs are required. CSJ limit signs are shown on BC(2). The OBEY WARNING SIGNS STATE LAW sign, STAY ALERT TALK OR TEXT LATER and the WORK ZONE TRAFFIC FINES DOUBLE sign with plaque shall be erected in advance of the CSJ limits. The BEGIN ROAD WORK NEXT X MILES, CONTRACTOR and END ROAD WORK signs shall be erected at or near the CSJ limits. For mobile operations, CSJ limit signs are not required.

11. Traffic control devices should be in place only while work is actually in progress or a definite need exists.

12. The Engineer has the final decision on the location of all traffic control devices.

13. Inactive equipment and work vehicles, including workers' private vehicles must be parked away from travel lanes. They should be as close to the right-of-way line as possible, or located behind a barrier or guardrail, or as approved by the Engineer.

WORKER SAFETY NOTES:

1. Workers on foot who are exposed to traffic or to construction equipment within the right-of-way shall wear high-visibility safety apparel meeting the requirements of ISEA "American National Standard for High-Visibility Apparel," or equivalent revisions, and labeled as ANSI 107-2004 standard performance for Class 2 or 3 risk exposure. Class 3 garments should be considered for high traffic volume work areas or night time work.

2. Except in emergency situations, flagger stations shall be illuminated when flagging is used at night.

COMPLIANT WORKZONE TRAFFIC CONTROL DEVICES

1. Only pre-qualified products shall be used. The "Compliant Work Zone Traffic Control Devices List" (CWZTCD) describes pre-qualified products and their sources.

2. Work zone traffic control devices shall be compliant with the Manual for Assessing safety Hardware (MASH).

THE DOCUMENTS BELOW CAN BE FOUND ON-LINE AT http://www.txdot.gov
COMPLIANT WORK ZONE TRAFFIC CONTROL DEVICES LIST (CWZTCD)
DEPARTMENTAL MATERIAL SPECIFICATIONS (DMS)
MATERIAL PRODUCER LIST (MPL)
ROADWAY DESIGN MANUAL - SEE "MANUALS (ONLINE MANUALS)"
STANDARD HIGHWAY SIGN DESIGNS FOR TEXAS (SHSD)
TEXAS MANUAL ON UNIFORM TRAFFIC CONTROL DEVICES (TMUTCD)
TRAFFIC ENGINEERING STANDARD SHEETS

Texas Department of Transportation | Traffic Safety Division Standard

BARRICADE AND CONSTRUCTION GENERAL NOTES AND REQUIREMENTS

BC(1)-21

FILE: bc-21.dgn	DN: TxDOT	CK: TxDOT	DW: TxDOT	CK: TxDOT
©TxDOT November 2002	CONT	SECT	JOB	HIGHWAY
REVISIONS 4-03 7-13 9-07 8-14 5-10 5-21	DIST	COUNTY		SHEET NO. 28

DISCLAIMER:
The use of this standard is governed by the "Texas Engineering Practice Act". No warranty of any kind is made by TxDOT for any purpose whatsoever. TxDOT assumes no responsibility for the conversion of this standard to other formats or for incorrect results or damages resulting from its use.

TYPICAL LOCATION OF CROSSROAD SIGNS

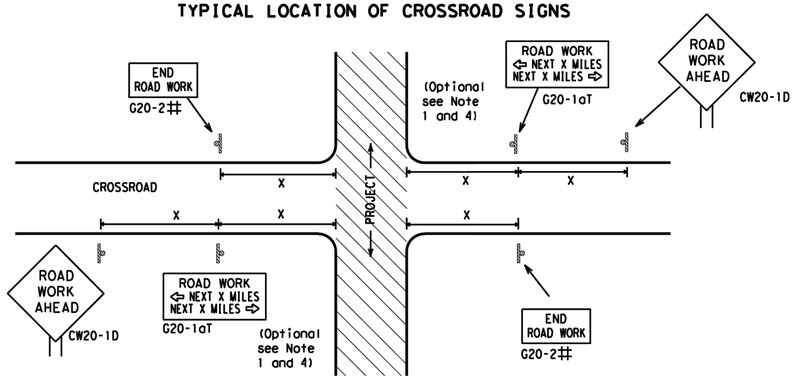

May be mounted on back of "ROAD WORK AHEAD"(CW20-1D) sign with approval of Engineer. (See note 2 below)

1. The typical minimum signing on a crossroad approach should be a "ROAD WORK AHEAD" (CW20-1D)sign and a (G20-2) "END ROAD WORK" sign, unless noted otherwise in plans.
2. The Engineer may use the reduced size 36" x 36" ROAD WORK AHEAD (CW20-1D) sign mounted back to back with the reduced size 36" x 18" "END ROAD WORK"(G20-2) sign on low volume crossroads (see Note 4 under "Typical Construction Warning Sign Size and Spacing"). See the "Standard Highway Sign Designs for Texas" manual for sign details. The Engineer may omit the advance warning signs on low volume crossroads. The Engineer will determine whether a road is low volume as per TMUTCD Part 5. This information shall be shown in the plans.
3. Based on existing field conditions, the Engineer/Inspector may require additional signs such as FLAGGER AHEAD, LOOSE GRAVEL, or other appropriate signs. When additional signs are required, these signs will be considered part of the minimum requirements. The Engineer/Inspector will determine the proper location and spacing of any sign not shown on the BC sheets, Traffic Control Plan sheets or the Work Zone Standard Sheets.
4. The "ROAD WORK NEXT X MILES"(G20-1aT)sign shall be required at high volume crossroads to advise motorists of the length of construction in either direction from the intersection. The Engineer will determine whether a roadway is considered high volume.
5. Additional traffic control devices may be shown elsewhere in the plans for higher volume crossroads.
6. When work occurs in the intersection area, appropriate traffic control devices, as shown elsewhere in the plans or as determined by the Engineer/Inspector, shall be in place.

T-INTERSECTION

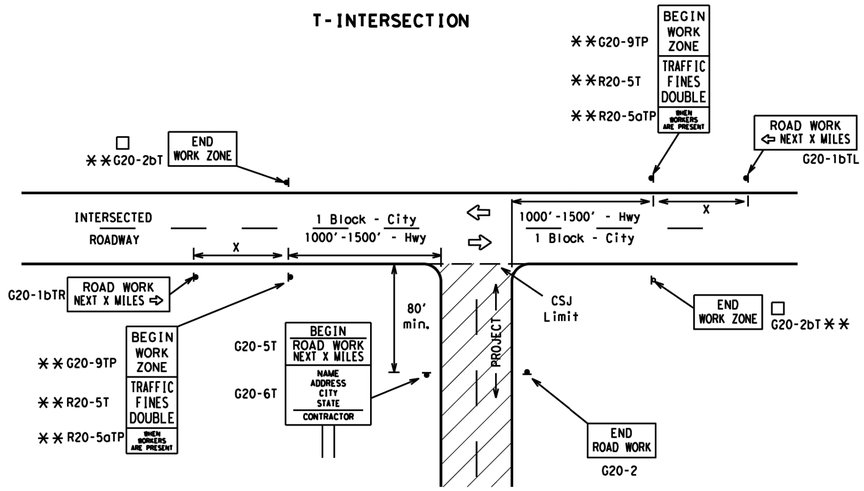

CSJ LIMITS AT T-INTERSECTION

1. The Engineer will determine the types and location of any additional traffic control devices, such as a flagger and accompanying signs, or other signs, that should be used when work is being performed at or near an intersection.
2. If construction closes the road at a T-intersection, the Contractor shall place the "CONTRACTOR NAME"(G20-6T) sign behind the Type 3 Barricades for the road closure (see BC(10) also). The "ROAD WORK NEXT X MILES" left arrow(G20-1bTL) and "ROAD WORK NEXT X MILES" right arrow (G20-1bTR)" signs shall be replaced by the detour signing called for in the plans.

TYPICAL CONSTRUCTION WARNING SIGN SIZE AND SPACING[1,5,6]

SIZE

Sign Number or Series	Conventional Road	Expressway/ Freeway
CW20[4], CW21, CW22, CW23, CW25	48" x 48"	48" x 48"
CW1, CW2, CW7, CW8, CW9, CW11, CW14	36" x 36"	48" x 48"
CW3, CW4, CW5, CW6, CW8-3, CW10, CW12	48" x 48"	48" x 48"

SPACING

Posted Speed	Sign △ Spacing "X"
MPH	Feet (Apprx.)
30	120
35	160
40	240
45	320
50	400
55	500[2]
60	600[2]
65	700[2]
70	800[2]
75	900[2]
80	1000[2]
*	*[3]

* For typical sign spacings on divided highways, expressways and freeways, see Part 6 of the "Texas Manual on Uniform Traffic Control Devices" (TMUTCD) typical application diagrams or TCP Standard Sheets.

△ Minimum distance from work area to first Advance Warning sign nearest the work area and/or distance between each additional sign.

GENERAL NOTES

1. Special or larger size signs may be used as necessary.
2. Distance between signs should be increased as required to have 1500 feet advance warning.
3. Distance between signs should be increased as required to have 1/2 mile or more advance warning.
4. 36" x 36" "ROAD WORK AHEAD" (CW20-1D)signs may be used on low volume crossroads at the discretion of the Engineer as per TMUTCD Part 5. See Note 2 under "Typical Location of Crossroad Signs".
5. Only diamond shaped warning sign sizes are indicated.
6. See sign size listing in "TMUTCD", Sign Appendix or the "Standard Highway Sign Designs for Texas" manual for complete list of available sign design sizes.

WORK AREAS IN MULTIPLE LOCATIONS WITHIN CSJ LIMITS

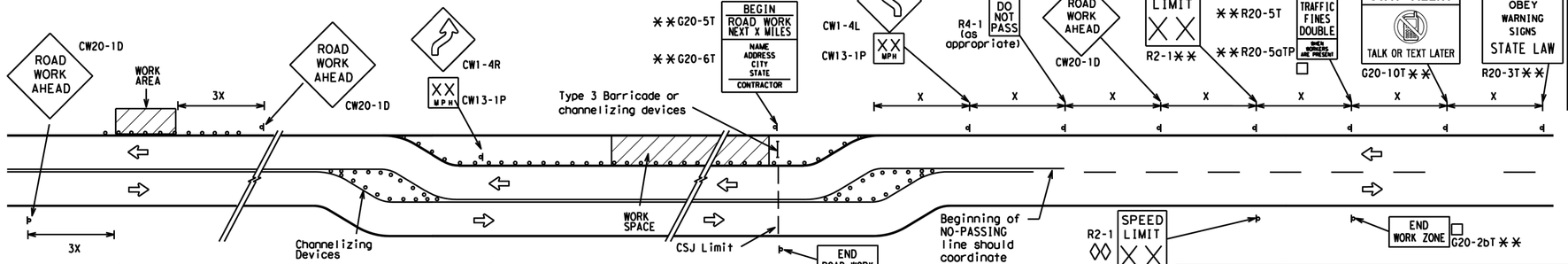

When extended distances occur between minimal work spaces, the Engineer/Inspector should ensure additional "ROAD WORK AHEAD"(CW20-1D)signs are placed in advance of these work areas to remind drivers they are still within the project limits. See the applicable TCP sheets for exact location and spacing of signs and channelizing devices.

SAMPLE LAYOUT OF SIGNING FOR WORK BEGINNING AT THE CSJ LIMITS

SAMPLE LAYOUT OF SIGNING FOR WORK BEGINNING DOWNSTREAM OF THE CSJ LIMITS

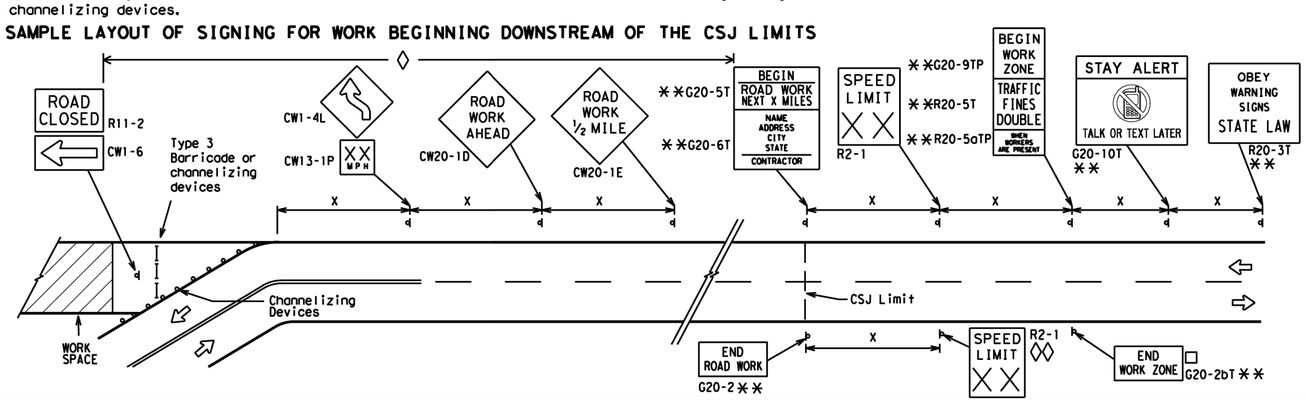

NOTES

The Contractor shall determine the appropriate distance to be placed on the G20-1 series signs and "BEGIN ROAD WORK NEXT X MILES"(G20-5T)sign for each specific project. This distance shall replace the "X" and shall be rounded to the nearest whole mile with the approval of the Engineer. No decimals shall be used.

□ The "BEGIN WORK ZONE"(G20-9TP) and "END WORK ZONE" (G20-2bT) shall be used as shown on the sample layout when advance signs are required outside the CSJ Limits. They inform the motorist of entering or leaving a part of the work zone lying outside the CSJ Limits where traffic fines may double if workers are present.

** CSJ limit signing is required for highway construction and maintenance work, with the exception of mobile operations.

◊ Area for placement of "ROAD WORK AHEAD" (CW20-1D)sign and other signs or devices as called for on the Traffic Control Plan.

◊◊ Contractor will install a regulatory speed limit sign at the end of the work zone.

LEGEND

⊢	Type 3 Barricade
○ ○ ○	Channelizing Devices
▬	Sign
X	See Typical Construction Warning Sign Size and Spacing chart or the TMUTCD for sign spacing requirements.

Texas Department of Transportation — Traffic Safety Division Standard

BARRICADE AND CONSTRUCTION PROJECT LIMIT

BC(2)-21

FILE: bc-21.dgn	DN: TxDOT	CK: TxDOT	DW: TxDOT	CK: TxDOT
©TxDOT November 2002	CONT	SECT	JOB	HIGHWAY
REVISIONS				
9-07 8-14	DIST	COUNTY		SHEET NO.
7-13 5-21				29

DATE:
FILE:

DISCLAIMER:
The use of this standard is governed by the "Texas Engineering Practice Act". No warranty of any kind is made by TxDOT for any purpose whatsoever. TxDOT assumes no responsibility for the conversion of this standard to other formats or for incorrect results or damages resulting from its use.

TYPICAL APPLICATION OF WORK ZONE SPEED LIMIT SIGNS

Work zone speed limits shall be regulatory, established in accordance with the "Procedures for Establishing Speed Zones," and approved by the Texas Transportation Commission, or by City Ordinance when within Incorporated City Limits.

Reduced speeds should only be posted in the vicinity of work activity and not throughout the entire project.

Regulatory work zone speed signs (R2-1) shall be removed or covered during periods when they are not needed.

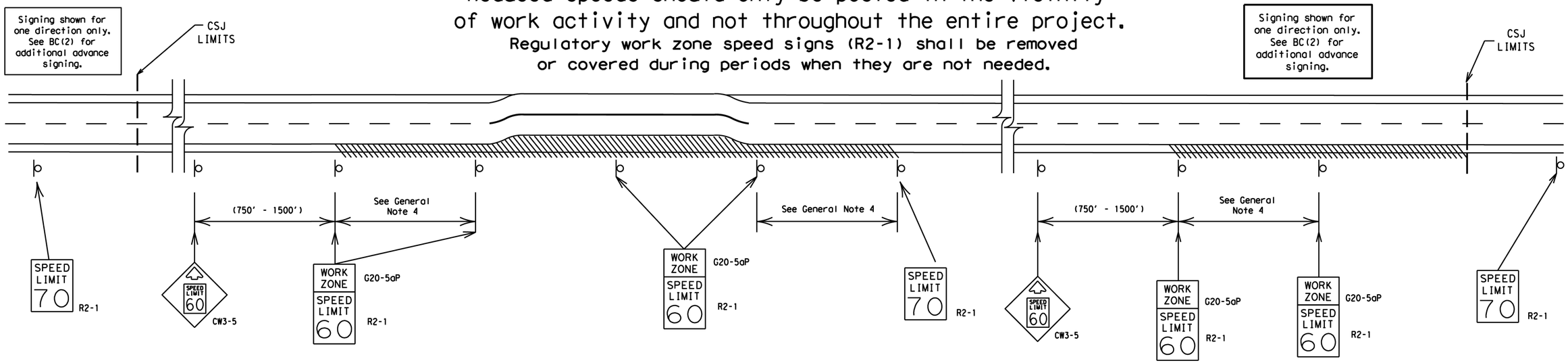

GUIDANCE FOR USE:

LONG/INTERMEDIATE TERM WORK ZONE SPEED LIMITS

This type of work zone speed limit should be included on the design of the traffic control plans when restricted geometrics with a lower design speed are present in the work zone and modification of the geometrics to a higher design speed is not feasible.

Long/Intermediate Term Work Zone Speed Limit signs, when approved as described above, should be posted and visible to the motorist when work activity is present. Work activity may also be defined as a change in the roadway that requires a reduced speed for motorists to safely negotiate the work area, including:

a) rough road or damaged pavement surface
b) substantial alteration of roadway geometrics (diversions)
c) construction detours
d) grade
e) width
f) other conditions readily apparent to the driver

As long as any of these conditions exist, the work zone speed limit signs should remain in place.

SHORT TERM WORK ZONE SPEED LIMITS

This type of work zone speed limit may be included on the design of the traffic control plans when workers or equipment are not behind concrete barrier, when work activity is within 10 feet of the traveled way or actually in the traveled way.

Short Term Work Zone Speed Limit signs should be posted and visible to the motorists only when work activity is present. When work activity is not present, signs shall be removed or covered.
(See Removing or Covering on BC(4)).

GENERAL NOTES

1. Regulatory work zone speed limits should be used only for sections of construction projects where speed control is of major importance.
2. Regulatory work zone speed limit signs shall be placed on supports at a 7 foot minimum mounting height.
3. Speed zone signs are illustrated for one direction of travel and are normally posted for each direction of travel.
4. Frequency of work zone speed limit signs should be:
   40 mph and greater 0.2 to 2 miles
   35 mph and less 0.2 to 1 mile
5. Regulatory speed limit signs shall have black legend and border on a white reflective background (See "Reflective Sheeting" on BC(4)).
6. Fabrication, erection and maintenance of the"ADVANCE SPEED LIMIT"(CW3-5)sign, "WORK ZONE"(G20-5aP) plaque and the "SPEED LIMIT"(R2-1)signs shall not be paid for directly, but shall be considered subsidiary to Item 502.
7. Turning signs from view, laying signs over or down will not be allowed, unless as otherwise noted under "REMOVING OR COVERING" on BC(4).
8. Techniques that may help reduce traffic speeds include but are not limited to:
   A. Law enforcement.
   B. Flagger stationed next to sign.
   C. Portable changeable message sign (PCMS).
   D. Low-power (drone) radar transmitter.
   E. Speed monitor trailers or signs.
9. Speeds shown on details above are for illustration only. Work Zone Speed Limits should only be posted as approved for each project.
10. For more specific guidance concerning the type of work, work zone conditions and factors impacting allowable regulatory construction speed zone reduction see TxDOT form #1204 in the TxDOT e-form system.

Texas Department of Transportation | Traffic Safety Division Standard

BARRICADE AND CONSTRUCTION WORK ZONE SPEED LIMIT

BC(3)-21

FILE: bc-21.dgn	DN: TxDOT	CK: TxDOT	DW: TxDOT	CK: TxDOT
© TxDOT November 2002	CONT	SECT	JOB	HIGHWAY
REVISIONS 9-07 8-14 7-13 5-21	DIST	COUNTY		SHEET NO. 30

DATE:
FILE:

DISCLAIMER:
The use of this standard is governed by the "Texas Engineering Practice Act". No warranty of any kind is made by TxDOT for any purpose whatsoever. TxDOT assumes no responsibility for the conversion of this standard to other formats or for incorrect results or damages resulting from its use.

TYPICAL MINIMUM CLEARANCES FOR LONG TERM AND INTERMEDIATE TERM SIGNS

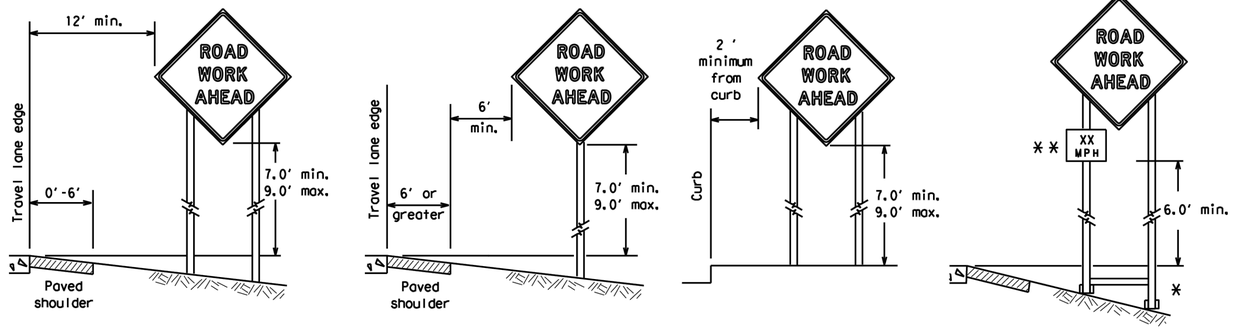

* When placing skid supports on unlevel ground, the leg post lengths must be adjusted so the sign appears straight and plumb. Objects shall NOT be placed under skids as a means of leveling.

** When plaques are placed on dual-leg supports, they should be attached to the upright nearest the travel lane. Supplemental plaques (advisory or distance) should not cover the surface of the parent sign.

ATTACHMENT FOR SIGN SUPPORTS

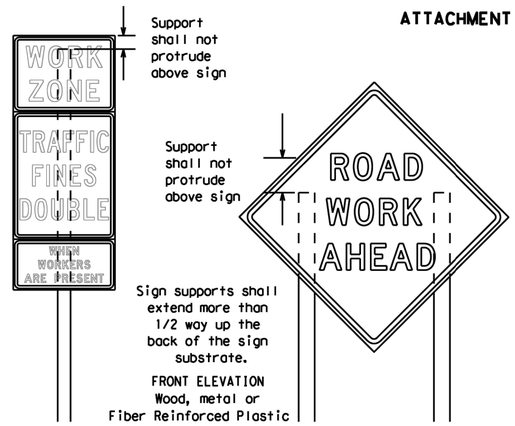

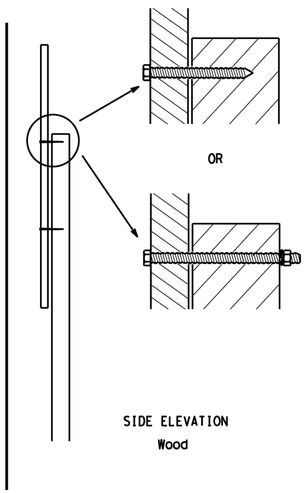

Attachment to wooden supports will be by bolts and nuts or screws. Use TxDOT's or manufacturer's recommended procedures for attaching sign substrates to other types of sign supports

Nails shall NOT be allowed. Each sign shall be attached directly to the sign support. Multiple signs shall not be joined or spliced by any means. Wood supports shall not be extended or repaired by splicing or other means.

Splicing embedded perforated square metal tubing in order to extend post height will only be allowed when the splice is made using four bolts, two above and two below the spice point. Splice must be located entirely behind the sign substrate, not near the base of the support. Splice insert lengths should be at least 5 times nominal post size, centered on the splice and of at least the same gauge material.

STOP/SLOW PADDLES

1. STOP/SLOW paddles are the primary method to control traffic by flaggers. The STOP/SLOW paddle size should be 24" x 24".
2. STOP/SLOW paddles shall be retroreflectorized when used at night.
3. STOP/SLOW paddles may be attached to a staff with a minimum length of 6' to the bottom of the sign.
4. Any lights incorporated into the STOP or SLOW paddle faces shall only be as specifically described in Section 6E.03 Hand Signaling Devices in the TMUTCD.

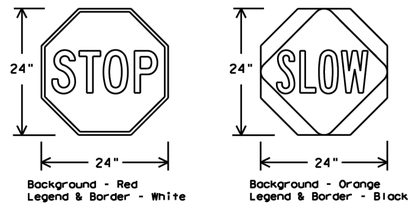

Background - Red
Legend & Border - White

Background - Orange
Legend & Border - Black

SHEETING REQUIREMENTS (WHEN USED AT NIGHT)		
USAGE	COLOR	SIGN FACE MATERIAL
BACKGROUND	RED	TYPE B OR C SHEETING
BACKGROUND	ORANGE	TYPE B_{FL} OR C_{FL} SHEETING
LEGEND & BORDER	WHITE	TYPE B OR C SHEETING
LEGEND & BORDER	BLACK	ACRYLIC NON-REFLECTIVE FILM

CONTRACTOR REQUIREMENTS FOR MAINTAINING PERMANENT SIGNS WITHIN THE PROJECT LIMITS

1. Permanent signs are used to give notice of traffic laws or regulations, call attention to conditions that are potentially hazardous to traffic operations, show route designations, destinations, directions, distances, services, points of interest, and other geographical, recreational, specific service (LOGO), or cultural information. Drivers proceeding through a work zone need the same, if not better route guidance as normally installed on a roadway without construction.
2. When permanent regulatory or warning signs conflict with work zone conditions, remove or cover the permanent signs until the permanent sign message matches the roadway condition. For details for covering large guide signs see the TS-CD standard.
3. When existing permanent signs are moved and relocated due to construction purposes, they shall be visible to motorists at all times.
4. If existing signs are to be relocated on their original supports, they shall be installed on crashworthy bases as shown on the SMD Standard sheets. The signs shall meet the required mounting heights shown on the BC Sheets or the SMD Standards. This work should be paid for under the appropriate pay item for relocating existing signs.
5. If permanent signs are to be removed and relocated using temporary supports, the Contractor shall use crashworthy supports as shown on the BC standard sheets, TLRS standard sheets or the CWZTCD list. The signs shall meet the required mounting heights shown on the BC, or the SMD standard sheets during construction. This work should be paid for under the appropriate pay item for relocating existing signs.
6. Any sign or traffic control device that is struck or damaged by the Contractor or his/her construction equipment shall be replaced as soon as possible by the Contractor to ensure proper guidance for the motorists. This will be subsidiary to Item 502.

GENERAL NOTES FOR WORK ZONE SIGNS

1. Contractor shall install and maintain signs in a straight and plumb condition and/or as directed by the Engineer.
2. Wooden sign posts shall be painted white.
3. Barricades shall NOT be used as sign supports.
4. All signs shall be installed in accordance with the plans or as directed by the Engineer. Signs shall be used to regulate, warn, and guide the traveling public safely through the work zone.
5. The Contractor may furnish either the sign design shown in the plans or in the "Standard Highway Sign Designs for Texas" (SHSD). The Engineer/Inspector may require the Contractor to furnish other work zone signs that are shown in the TMUTCD but may have been omitted from the plans. Any variation in the plans shall be documented by written agreement between the Engineer and the Contractor's Responsible Person. All changes must be documented in writing before being implemented. This can include documenting the changes in the Inspector's TxDOT diary and having both the Inspector and Contractor initial and date the agreed upon changes.
6. The Contractor shall furnish sign supports listed in the "Compliant Work Zone Traffic Control Device List" (CWZTCD) for small roadside signs. Supports for temporary large roadside signs shall meet the requirements detailed on the Temporary Large Roadside Signs (TLRS) standard sheets. The Contractor shall install the sign support in accordance with the manufacturer's recommendations. If there is a question regarding installation procedures, the Contractor shall furnish the Engineer a copy of the manufacturer's installation recommendations so the Engineer can verify the correct procedures are being followed.
7. The Contractor is responsible for installing signs on approved supports and replacing signs with damaged or cracked substrates and/or damaged or marred reflective sheeting as directed by the Engineer/Inspector.
8. Identification markings may be shown only on the back of the sign substrate. The maximum height of letters and/or company logos used for identification shall be 1 inch.
9. The Contractor shall replace damaged wood posts. New or damaged wood sign posts shall not be spliced.

DURATION OF WORK (as defined by the "Texas Manual on Uniform Traffic Control Devices" Part 6)

1. The types of sign supports, sign mounting height, the size of signs, and the type of sign substrates can vary based on the type of work being performed. The Engineer is responsible for selecting the appropriate size sign for the type of work being performed. The Contractor is responsible for ensuring the sign support, sign mounting height and substrate meets manufacturer's recommendations in regard to crashworthiness and duration of work requirements.
   a. Long-term stationary - work that occupies a location more than 3 days.
   b. Intermediate-term stationary - work that occupies a location more than one daylight period up to 3 days, or nighttime work lasting more than one hour.
   c. Short-term stationary - daytime work that occupies a location for more than 1 hour in a single daylight period.
   d. Short, duration - work that occupies a location up to 1 hour.
   e. Mobile - work that moves continuously or intermittently (stopping for up to approximately 15 minutes.)

SIGN MOUNTING HEIGHT

1. The bottom of Long-term/Intermediate-term signs shall be at least 7 feet, but not more than 9 feet, above the paved surface, except as shown for supplemental plaques mounted below other signs.
2. The bottom of Short-term/Short Duration signs shall be a minimum of 1 foot above the pavement surface but no more than 2 feet above the ground.
3. Long-term/Intermediate-term Signs may be used in lieu of Short-term/Short Duration signing.
4. Short-term/Short Duration signs shall be used only during daylight and shall be removed at the end of the workday or raised to appropriate Long-term/Intermediate sign height.
5. Regulatory signs shall be mounted at least 7 feet, but not more than 9 feet, above the paved surface regardless of work duration.

SIZE OF SIGNS

1. The Contractor shall furnish the sign sizes shown on BC (2) unless otherwise shown in the plans or as directed by the Engineer.

SIGN SUBSTRATES

1. The Contractor shall ensure the sign substrate is installed in accordance with the manufacturer's recommendations for the type of sign support that is being used. The CWZTCD lists each substrate that can be used on the different types and models of sign supports.
2. "Mesh" type materials are NOT an approved sign substrate, regardless of the tightness of the weave.
3. All wooden individual sign panels fabricated from 2 or more pieces shall have one or more plywood cleat, 1/2" thick by 6" wide, fastened to the back of the sign and extending fully across the sign. The cleat shall be attached to the back of the sign using wood screws that do not penetrate the face of the sign panel. The screws shall be placed on both sides of the splice and spaced at 6" centers. The Engineer may approve other methods of splicing the sign face.

REFLECTIVE SHEETING

1. All signs shall be retroreflective and constructed of sheeting meeting the color and retro-reflectivity requirements of DMS-8300 for rigid signs or DMS-8310 for roll-up signs. The web address for DMS specifications is shown on BC(1).
2. White sheeting, meeting the requirements of DMS-8300 Type A, shall be used for signs with a white background.
3. Orange sheeting, meeting the requirements of DMS-8300 Type B_{FL} or Type C_{FL}, shall be used for rigid signs with orange backgrounds.

SIGN LETTERS

1. All sign letters and numbers shall be clear, and open rounded type uppercase alphabet letters as approved by the Federal Highway Administration (FHWA) and as published in the "Standard Highway Sign Design for Texas" manual. Signs, letters and numbers shall be of first class workmanship in accordance with Department Standards and Specifications.

REMOVING OR COVERING

1. When sign messages may be confusing or do not apply, the signs shall be removed or completely covered.
2. Long-term stationary or intermediate stationary signs installed on square metal tubing may be turned away from traffic 90 degrees when the sign message is not applicable. This technique may not be used for signs installed in the median of divided highways or near any intersections where the sign may be seen from approaching traffic.
3. Signs installed on wooden skids shall not be turned at 90 degree angles to the roadway. These signs should be removed or completely covered when not required.
4. When signs are covered, the material used shall be opaque, such as heavy mil black plastic, or other materials which will cover the entire sign face and maintain their opaque properties under automobile headlights at night, without damaging the sign sheeting.
5. Burlap shall NOT be used to cover signs.
6. Duct tape or other adhesive material shall NOT be affixed to a sign face.
7. Signs and anchor stubs shall be removed and holes backfilled upon completion of work.

SIGN SUPPORT WEIGHTS

1. Where sign supports require the use of weights to keep from turning over, the use of sandbags with dry, cohesionless sand should be used.
2. The sandbags will be tied shut to keep the sand from spilling and to maintain a constant weight.
3. Rock, concrete, iron, steel or other solid objects shall not be permitted for use as sign support weights.
4. Sandbags should weigh a minimum of 35 lbs and a maximum of 50 lbs.
5. Sandbags shall be made of a durable material that tears upon vehicular impact. Rubber (such as tire inner tubes) shall NOT be used.
6. Rubber ballasts designed for channelizing devices should not be used for ballast on portable sign supports. Sign supports designed and manufactured with rubber bases may be used when shown on the CWZTCD list.
7. Sandbags shall only be placed along or laid over the base supports of the traffic control device and shall not be suspended above ground level or hung with rope, wire, chains or other fasteners. Sandbags shall be placed along the length of the skids to weigh down the sign support.
8. Sandbags shall NOT be placed under the skid and shall not be used to level sign supports placed on slopes.

FLAGS ON SIGNS

1. Flags may be used to draw attention to warning signs. When used, the flag shall be 16 inches square or larger and shall be orange or fluorescent red-orange in color. Flags shall not be allowed to cover any portion of the sign face.

Texas Department of Transportation | Traffic Safety Division Standard

BARRICADE AND CONSTRUCTION TEMPORARY SIGN NOTES

BC(4)-21

FILE: bc-21.dgn	DN: TxDOT	CK: TxDOT	DW: TxDOT	CK: TxDOT
©TxDOT November 2002	CONT	SECT	JOB	HIGHWAY
REVISIONS				
9-07 8-14	DIST	COUNTY		SHEET NO.
7-13 5-21				31

DATE:
FILE:

DISCLAIMER:
The use of this standard is governed by the "Texas Engineering Practice Act". No warranty of any kind is made by TxDOT for any purpose whatsoever. TxDOT assumes no responsibility for the conversion of this standard to other formats or for incorrect results or damages resulting from its use.

DATE:
FILE:

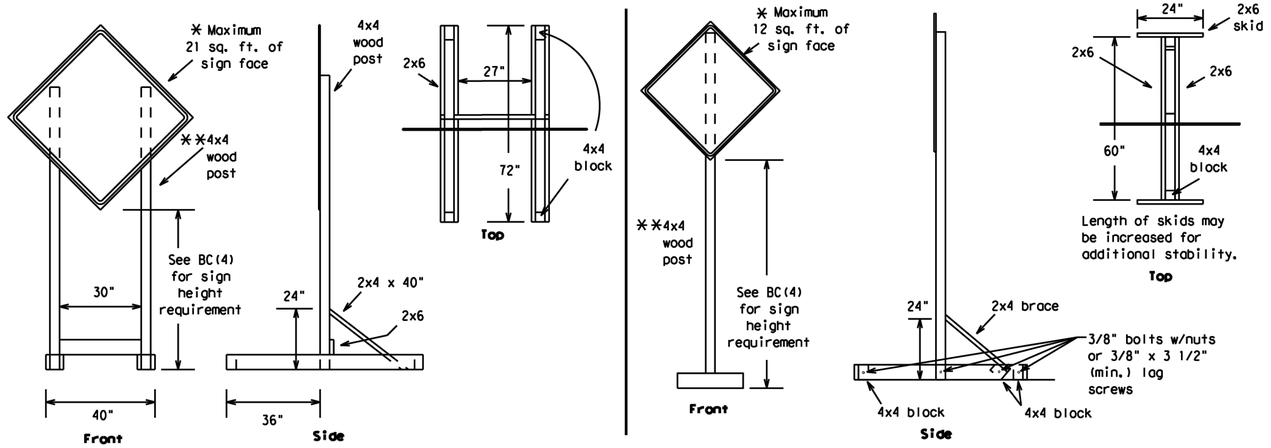

SKID MOUNTED WOOD SIGN SUPPORTS

*** LONG/INTERMEDIATE TERM STATIONARY - PORTABLE SKID MOUNTED SIGN SUPPORTS**

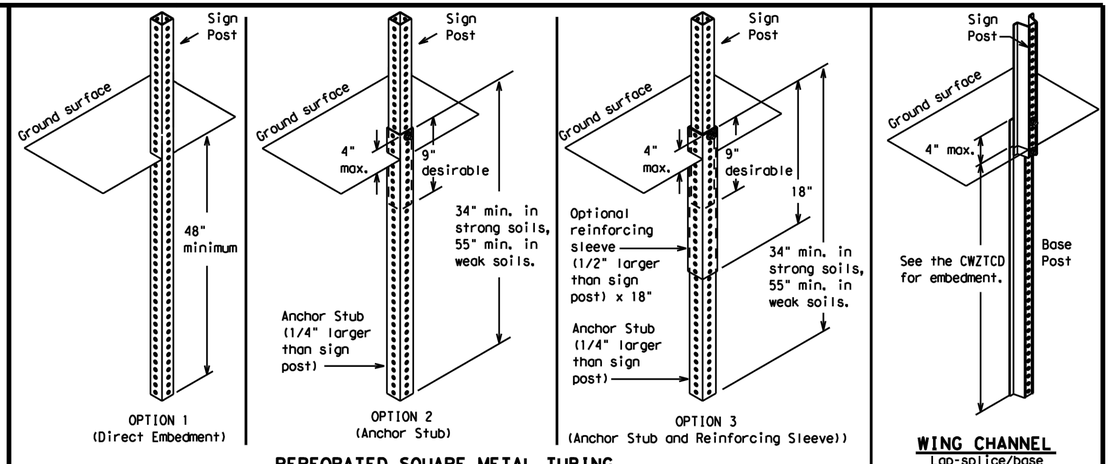

PERFORATED SQUARE METAL TUBING

GROUND MOUNTED SIGN SUPPORTS

Refer to the CWZTCD and the manufacturer's installation procedure for each type sign support.
The maximum sign square footage shall adhere to the manufacturer's recommendation.
Two post installations can be used for larger signs.

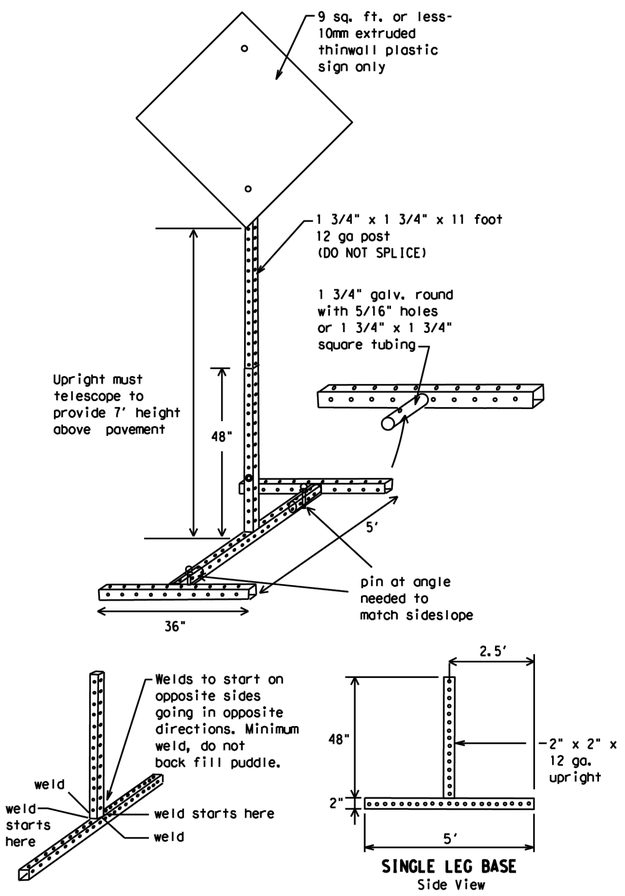

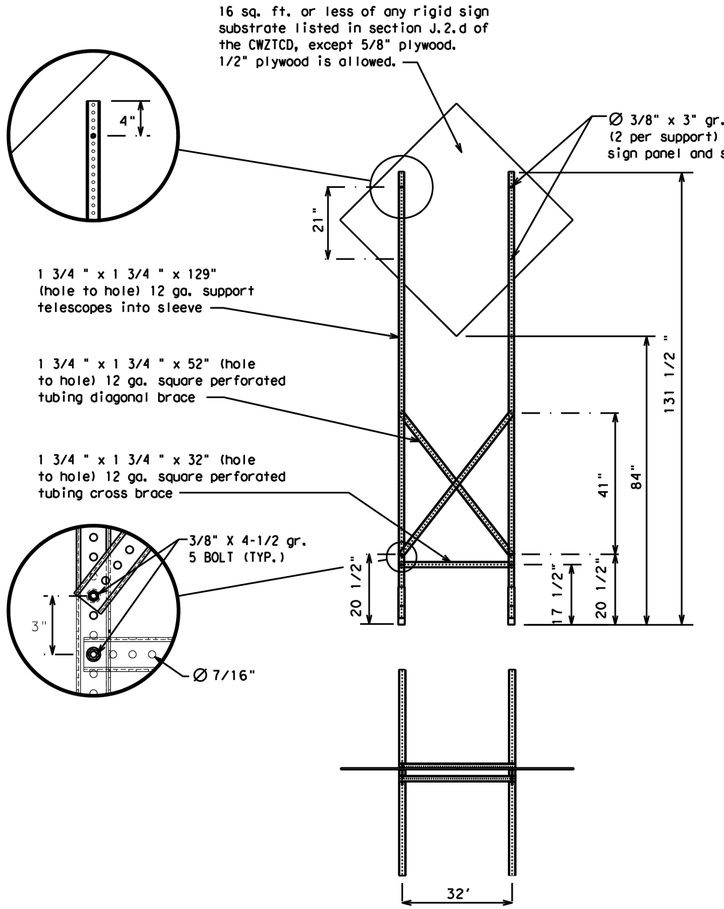

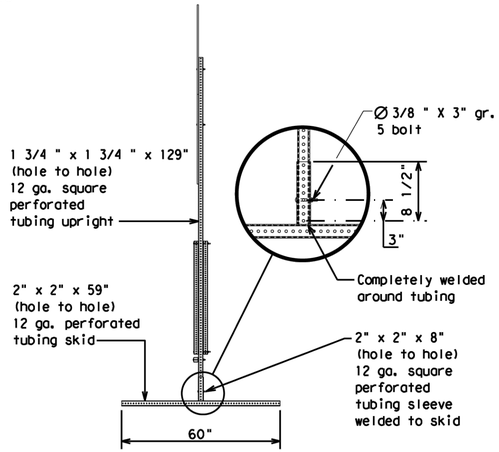

SKID MOUNTED PERFORATED SQUARE STEEL TUBING SIGN SUPPORTS

*** LONG/INTERMEDIATE TERM STATIONARY - PORTABLE SKID MOUNTED SIGN SUPPORTS**

WEDGE ANCHORS

Both steel and plastic Wedge Anchor Systems as shown on the SMD Standard Sheets may be used as temporary sign supports for signs up to 10 square feet of sign face. They may be set in concrete or in sturdy soils if approved by the Engineer. (See web address for "Traffic Engineering Standard Sheets" on BC(1)).

OTHER DESIGNS

MORE DETAILS OF APPROVED LONG/INTERMEDIATE AND SHORT TERM SUPPORTS CAN BE FOUND ON THE CWZTCD LIST. SEE BC(1) FOR WEBSITE LOCATION.

GENERAL NOTES

1. Nails may be used in the assembly of wooden sign supports, but 3/8" bolts with nuts or 3/8" x 3 1/2" lag screws must be used on every joint for final connection.
2. No more than 2 sign posts shall be placed within a 7 ft. circle, except for specific materials noted on the CWZTCD List.
3. When project is completed, all sign supports and foundations shall be removed from the project site. This will be considered subsidiary to Item 502.

* See BC(4) for definition of "Work Duration."

** Wood sign posts MUST be one piece. Splicing will NOT be allowed. Posts shall be painted white.

☐ See the CWZTCD for the type of sign substrate that can be used for each approved sign support.

Texas Department of Transportation | Traffic Safety Division Standard

BARRICADE AND CONSTRUCTION TYPICAL SIGN SUPPORT

BC(5)-21

FILE: bc-21.dgn	DN: TxDOT	CK: TxDOT	DW: TxDOT	CK: TxDOT
© TxDOT November 2002	CONT	SECT	JOB	HIGHWAY
REVISIONS				
9-07 8-14	DIST	COUNTY		SHEET NO.
7-13 5-21				32

DISCLAIMER:
The use of this standard is governed by the "Texas Engineering Practice Act". No warranty of any kind is made by TxDOT for any purpose whatsoever. TxDOT assumes no responsibility for the conversion of this standard to other formats or for incorrect results or damages resulting from its use.

DATE:
FILE:

WHEN NOT IN USE, REMOVE THE PCMS FROM THE RIGHT-OF-WAY OR PLACE THE PCMS BEHIND BARRIER OR GUARDRAIL WITH SIGN PANEL TURNED PARALLEL TO TRAFFIC

PORTABLE CHANGEABLE MESSAGE SIGNS

1. The Engineer/Inspector shall approve all messages used on portable changeable message signs (PCMS).
2. Messages on PCMS should contain no more than 8 words (about four to eight characters per word), not including simple words such as "TO," "FOR," "AT," etc.
3. Messages should consist of a single phase, or two phases that alternate. Three-phase messages are not allowed. Each phase of the message should convey a single thought, and must be understood by itself.
4. Use the word "EXIT" to refer to an exit ramp on a freeway; i.e., "EXIT CLOSED." Do not use the term "RAMP."
5. Always use the route or interstate designation (IH, US, SH, FM) along with the number when referring to a roadway.
6. When in use, the bottom of a stationary PCMS message panel should be a minimum 7 feet above the roadway, where possible.
7. The message term "WEEKEND" should be used only if the work is to start on Saturday morning and end by Sunday evening at midnight. Actual days and hours of work should be displayed on the PCMS if work is to begin on Friday evening and/or continue into Monday morning.
8. The Engineer/Inspector may select one of two options which are available for displaying a two-phase message on a PCMS. Each phase may be displayed for either four seconds each or for three seconds each.
9. Do not "flash" messages or words included in a message. The message should be steady burn or continuous while displayed.
10. Do not present redundant information on a two-phase message; i.e., keeping two lines of the message the same and changing the third line.
11. Do not use the word "Danger" in message.
12. Do not display the message "LANES SHIFT LEFT" or "LANES SHIFT RIGHT" on a PCMS. Drivers do not understand the message.
13. Do not display messages that scroll horizontally or vertically across the face of the sign.
14. The following table lists abbreviated words and two-word phrases that are acceptable for use on a PCMS. Both words in a phrase must be displayed together. Words or phrases not on this list should not be abbreviated, unless shown in the TMUTCD.
15. PCMS character height should be at least 18 inches for trailer mounted units. They should be visible from at least 1/2 (.5) mile and the text should be legible from at least 600 feet at night and 800 feet in daylight. Truck mounted units must have a character height of 10 inches and must be legible from at least 400 feet.
16. Each line of text should be centered on the message board rather than left or right justified.
17. If disabled, the PCMS should default to an illegible display that will not alarm motorists and will only be used to alert workers that the PCMS has malfunctioned. A pattern such as a series of horizontal solid bars is appropriate.

WORD OR PHRASE	ABBREVIATION
Access Road	ACCS RD
Alternate	ALT
Avenue	AVE
Best Route	BEST RTE
Boulevard	BLVD
Bridge	BRDG
Cannot	CANT
Center	CTR
Construction Ahead	CONST AHD
CROSSING	XING
Detour Route	DETOUR RTE
Do Not	DONT
East	E
Eastbound	(route) E
Emergency	EMER
Emergency Vehicle	EMER VEH
Entrance, Enter	ENT
Express Lane	EXP LN
Expressway	EXPWY
XXXX Feet	XXXX FT
Fog Ahead	FOG AHD
Freeway	FRWY, FWY
Freeway Blocked	FWY BLKD
Friday	FRI
Hazardous Driving	HAZ DRIVING
Hazardous Material	HAZMAT
High-Occupancy	HOV
Vehicle Highway	HWY
Hour(s)	HR, HRS
Information	INFO
It Is	ITS
Junction	JCT
Left	LFT
Left Lane	LFT LN
Lane Closed	LN CLOSED
Lower Level	LWR LEVEL
Maintenance	MAINT

WORD OR PHRASE	ABBREVIATION
Major	MAJ
Miles	MI
Miles Per Hour	MPH
Minor	MNR
Monday	MON
Normal	NORM
North	N
Northbound	(route) N
Parking	PKING
Road	RD
Right Lane	RT LN
Saturday	SAT
Service Road	SERV RD
Shoulder	SHLDR
Slippery	SLIP
South	S
Southbound	(route) S
Speed	SPD
Street	ST
Sunday	SUN
Telephone	PHONE
Temporary	TEMP
Thursday	THURS
To Downtown	TO DWNTN
Traffic	TRAF
Travelers	TRVLRS
Tuesday	TUES
Time Minutes	TIME MIN
Upper Level	UPR LEVEL
Vehicles (s)	VEH, VEHS
Warning	WARN
Wednesday	WED
Weight Limit	WT LIMIT
West	W
Westbound	(route) W
Wet Pavement	WET PVMT
Will Not	WONT

Roadway designation # IH-number, US-number, SH-number, FM-number

RECOMMENDED PHASES AND FORMATS FOR PCMS MESSAGES DURING ROADWORK ACTIVITIES

(The Engineer may approve other messages not specifically covered here.)

Phase 1: Condition Lists

Road/Lane/Ramp Closure List

FREEWAY CLOSED X MILE	FRONTAGE ROAD CLOSED
ROAD CLOSED AT SH XXX	SHOULDER CLOSED XXX FT
ROAD CLSD AT FM XXXX	RIGHT LN CLOSED XXX FT
RIGHT X LANES CLOSED	RIGHT X LANES OPEN
CENTER LANE CLOSED	DAYTIME LANE CLOSURES
NIGHT LANE CLOSURES	I-XX SOUTH EXIT CLOSED
VARIOUS LANES CLOSED	EXIT XXX CLOSED X MILE
EXIT CLOSED	RIGHT LN TO BE CLOSED
MALL DRIVEWAY CLOSED	X LANES CLOSED TUE - FRI
XXXXXXXX BLVD CLOSED	

Other Condition List

ROADWORK XXX FT	ROAD REPAIRS XXXX FT
FLAGGER XXXX FT	LANE NARROWS XXXX FT
RIGHT LN NARROWS XXXX FT	TWO-WAY TRAFFIC XX MILE
MERGING TRAFFIC XXXX FT	CONST TRAFFIC XXX FT
LOOSE GRAVEL XXXX FT	UNEVEN LANES XXXX FT
DETOUR X MILE	ROUGH ROAD XXXX FT
ROADWORK PAST SH XXXX	ROADWORK NEXT FRI-SUN
BUMP XXXX FT	US XXX EXIT X MILES
TRAFFIC SIGNAL XXXX FT	LANES SHIFT *

* LANES SHIFT in Phase 1 must be used with STAY IN LANE in Phase 2.

Phase 2: Possible Component Lists

Action to Take/Effect on Travel List

MERGE RIGHT	FORM X LINES RIGHT
DETOUR NEXT X EXITS	USE XXXXX RD EXIT
USE EXIT XXX	USE EXIT I-XX NORTH
STAY ON US XXX SOUTH	USE I-XX E TO I-XX N
TRUCKS USE US XXX N	WATCH FOR TRUCKS
WATCH FOR TRUCKS	EXPECT DELAYS
EXPECT DELAYS	PREPARE TO STOP
REDUCE SPEED XXX FT	END SHOULDER USE
USE OTHER ROUTES	WATCH FOR WORKERS
STAY IN LANE *	

Location List

AT FM XXXX
BEFORE RAILROAD CROSSING
NEXT X MILES
PAST US XXX EXIT
XXXXXXX TO XXXXXXX
US XXX TO FM XXXX

Warning List

SPEED LIMIT XX MPH
MAXIMUM SPEED XX MPH
MINIMUM SPEED XX MPH
ADVISORY SPEED XX MPH
RIGHT LANE EXIT
USE CAUTION
DRIVE SAFELY
DRIVE WITH CARE

** Advance Notice List

TUE-FRI XX AM- X PM
APR XX-XX X PM-X AM
BEGINS MONDAY
BEGINS MAY XX
MAY X-X XX PM - XX AM
NEXT FRI-SUN
XX AM TO XX PM
NEXT TUE AUG XX
TONIGHT XX PM- XX AM

* LANES SHIFT in Phase 1 must be used with STAY IN LANE in Phase 2.

** See Application Guidelines Note 6.

APPLICATION GUIDELINES

1. Only 1 or 2 phases are to be used on a PCMS.
2. The 1st phase (or both) should be selected from the "Road/Lane/Ramp Closure List" and the "Other Condition List".
3. A 2nd phase can be selected from the "Action to Take/Effect on Travel, Location, General Warning, or Advance Notice Phase Lists".
4. A Location Phase is necessary only if a distance or location is not included in the first phase selected.
5. If two PCMS are used in sequence, they must be separated by a minimum of 1000 ft. Each PCMS shall be limited to two phases, and should be understandable by themselves.
6. For advance notice, when the current date is within seven days of the actual work date, calendar days should be replaced with days of the week. Advance notification should typically be for no more than one week prior to the work.

WORDING ALTERNATIVES

1. The words RIGHT, LEFT and ALL can be interchanged as appropriate.
2. Roadway designations IH, US, SH, FM and LP can be interchanged as appropriate.
3. EAST, WEST, NORTH and SOUTH (or abbreviations E, W, N and S) can be interchanged as appropriate.
4. Highway names and numbers replaced as appropriate.
5. ROAD, HIGHWAY and FREEWAY can be interchanged as needed.
6. AHEAD may be used instead of distances if necessary.
7. FT and MI, MILE and MILES interchanged as appropriate.
8. AT, BEFORE and PAST interchanged as needed.
9. Distances or AHEAD can be eliminated from the message if a location phase is used.

PCMS SIGNS WITHIN THE R.O.W. SHALL BE BEHIND GUARDRAIL OR CONCRETE BARRIER OR SHALL HAVE A MINIMUM OF FOUR (4) PLASTIC DRUMS PLACED PERPENDICULAR TO TRAFFIC ON THE UPSTREAM SIDE OF THE PCMS, WHEN EXPOSED TO ONE DIRECTION OF TRAFFIC. WHEN EXPOSED TO TWO WAY TRAFFIC, THE FOUR DRUMS SHOULD BE PLACED WITH ONE DRUM AT EACH OF THE FOUR CORNERS OF THE UNIT.

FULL MATRIX PCMS SIGNS

1. When Full Matrix PCMS signs are used, the character height and legibility/visibility requirements shall be maintained as listed in Note 15 under "PORTABLE CHANGEABLE MESSAGE SIGNS" above.
2. When symbol signs, such as the "Flagger Symbol"(CW20-7) are represented graphically on the Full Matrix PCMS sign and, with the approval of the Engineer, it shall maintain the legibility/visibility requirement listed above.
3. When symbol signs are represented graphically on the Full Matrix PCMS, they shall only supplement the use of the static sign represented, and shall not substitute for, or replace that sign.
4. A full matrix PCMS may be used to simulate a flashing arrow board provided it meets the visibility, flash rate and dimming requirements on BC(7), for the same size arrow.

Texas Department of Transportation

Traffic Safety Division Standard

BARRICADE AND CONSTRUCTION PORTABLE CHANGEABLE MESSAGE SIGN (PCMS)

BC(6)-21

FILE: bc-21.dgn	DN: TxDOT	CK: TxDOT	DW: TxDOT	CK: TxDOT
©TxDOT November 2002	CONT	SECT	JOB	HIGHWAY
REVISIONS				
9-07 8-14	DIST	COUNTY		SHEET NO.
7-13 5-21				33

100

DISCLAIMER:
The use of this standard is governed by the "Texas Engineering Practice Act". No warranty of any kind is made by TxDOT for any purpose whatsoever. TxDOT assumes no responsibility for the conversion of this standard to other formats or for incorrect results or damages resulting from its use.

DATE:
FILE:

1. Barrier Reflectors shall be pre-qualified, and conform to the color and reflectivity requirements of DMS-8600. A list of prequalified Barrier Reflectors can be found at the Material Producer List web address shown on BC(1).
2. Color of Barrier Reflectors shall be as specified in the TMUTCD. The cost of the reflectors shall be considered subsidiary to Item 512.

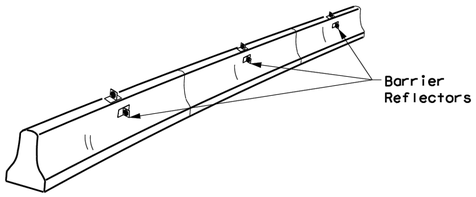

CONCRETE TRAFFIC BARRIER (CTB)

3. Where traffic is on one side of the CTB, two (2) Barrier Reflectors shall be mounted in approximately the midsection of each section of CTB. An alternate mounting location is uniformly spaced at one end of each CTB. This will allow for attachment of a barrier grapple without damaging the reflector. The Barrier Reflector mounted on the side of the CTB shall be located directly below the reflector mounted on top of the barrier, as shown in the detail above.
4. Where CTB separates two-way traffic, three barrier reflectors shall be mounted on each section of CTB. The reflector unit on top shall have two yellow reflective faces (Bi-Directional)while the reflectors on each side of the barrier shall have one yellow reflective face, as shown in the detail above.
5. When CTB separates traffic traveling in the same direction, no barrier reflectors will be required on top of the CTB.
6. Barrier Reflector units shall be yellow or white in color to match the edgeline being supplemented.
7. Maximum spacing of Barrier Reflectors is forty (40) feet.
8. Pavement markers or temporary flexible-reflective roadway marker tabs shall NOT be used as CTB delineation.
9. Attachment of Barrier Reflectors to CTB shall be per manufacturer's recommendations.
10. Missing or damaged Barrier Reflectors shall be replaced as directed by the Engineer.
11. Single slope barriers shall be delineated as shown on the above detail.

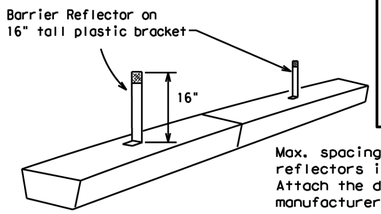

Max. spacing of barrier reflectors is 20 feet.
Attach the delineators as per manufacturer's recommendations.

LOW PROFILE CONCRETE BARRIER (LPCB) USED IN WORK ZONES

LPCB is approved for use in work zone locations, where the posted speed is 45mph, or less. See Roadway Standard Sheet LPCB.

LOW PROFILE CONCRETE BARRIER (LPCB)

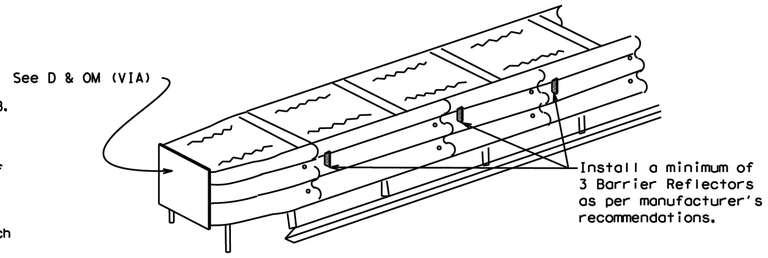

DELINEATION OF END TREATMENTS

END TREATMENTS FOR CTB'S USED IN WORK ZONES

End treatments used on CTB's in work zones shall meet the apppropriate crashworthy standards as defined in the Manual for Assessing Safety Hardware (MASH). Refer to the CWZTCD List for approved end treatments and manufacturers.

BARRIER REFLECTORS FOR CONCRETE TRAFFIC BARRIER AND ATTENUATORS

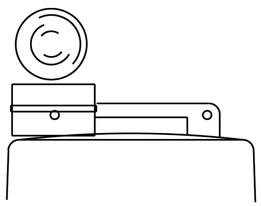

Type C Warning Light or approved substitute mounted on a drum adjacent to the travel way.

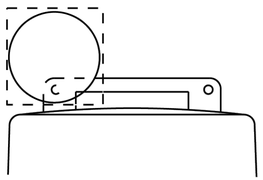

Warning reflector may be round or square. Must have a yellow reflective surface area of at least 30 square inches

WARNING LIGHTS

1. Warning lights shall meet the requirements of the TMUTCD.
2. Warning lights shall NOT be installed on barricades.
3. Type A-Low Intensity Flashing Warning Lights are commonly used with drums. They are intended to warn of or mark a potentially hazardous area. Their use shall be as indicated on this sheet and/or other sheets of the plans by the designation "FL". The Type A Warning Lights shall not be used with signs manufactured with Type B_{FL} or C_{FL} Sheeting meeting the requirements of Departmental Material Specification DMS-8300.
4. Type-C and Type D 360 degree Steady Burn Lights are intended to be used in a series for delineation to supplement other traffic control devices. Their use shall be as indicated on this sheet and/or other sheets of the plans by the designation "SB".
5. The Engineer/Inspector or the plans shall specify the location and type of warning lights to be installed on the traffic control devices.
6. When required by the Engineer, the Contractor shall furnish a copy of the warning lights certification. The warning light manufacturer will certify the warning lights meet the requirements of the latest ITE Purchase Specifications for Flashing and Steady-Burn Warning Lights.
7. When used to delineate curves, Type-C and Type D Steady Burn Lights should only be placed on the outside of the curve, not the inside.
8. The location of warning lights and warning reflectors on drums shall be as shown elsewhere in the plans.

WARNING LIGHTS MOUNTED ON PLASTIC DRUMS

1. Type A flashing warning lights are intended to warn drivers that they are approaching or are in a potentially hazardous area.
2. Type A random flashing warning lights are not intended for delineation and shall not be used in a series.
3. A series of sequential flashing warning lights placed on channelizing devices to form a merging taper may be used for delineation. If used, the successive flashing of the sequential warning lights should occur from the beginning of the taper to the end of the merging taper in order to identify the desired vehicle path. The rate of flashing for each light shall be 65 flashes per minute, plus or minus 10 flashes.
4. Type C and D steady-burn warning lights are intended to be used in a series to delineate the edge of the travel lane on detours, on lane changes, on lane closures, and on other similar conditions.
5. Type A, Type C and Type D warning lights shall be installed at locations as detailed on other sheets in the plans.
6. Warning lights shall not be installed on a drum that has a sign, chevron or vertical panel.
7. The maximum spacing for warning lights on drums should be identical to the channelizing device spacing.

WARNING REFLECTORS MOUNTED ON PLASTIC DRUMS AS A SUBSTITUTE FOR TYPE C (STEADY BURN) WARNING LIGHTS

1. A warning reflector or approved substitute may be mounted on a plastic drum as a substitute for a Type C, steady burn warning light at the discretion of the Contractor unless otherwise noted in the plans.
2. The warning reflector shall be yellow in color and shall be manufactured using a sign substrate approved for use with plastic drums listed on the CWZTCD.
3. The warning reflector shall have a minimum retroreflective surface area (one-side) of 30 square inches.
4. Round reflectors shall be fully reflectorized, including the area where attached to the drum.
5. Square substrates must have a minimum of 30 square inches of reflectorized sheeting. They do not have to be reflectorized where it attaches to the drum.
6. The side of the warning reflector facing approaching traffic shall have sheeting meeting the color and retroreflectivity requirements for DMS 8300-Type B or Type C.
7. When used near two-way traffic, both sides of the warning reflector shall be reflectorized.
8. The warning reflector should be mounted on the side of the handle nearest approaching traffic.
9. The maximum spacing for warning reflectors should be identical to the channelizing device spacing requirements.

Arrow Boards may be located behind channelizing devices in place for a shoulder taper or merging taper, otherwise they shall be delineated with four (4) channelizing devices placed perpendicular to traffic on the upstream side of traffic.

1. The Flashing Arrow Board should be used for all lane closures on multi-lane roadways, or slow moving maintenance or construction activities on the travel lanes.
2. Flashing Arrow Boards should not be used on two-lane, two-way roadways, detours, diversions or work on shoulders unless the "CAUTION" display (see detail below) is used.
3. The Engineer/Inspector shall choose all appropriate signs, barricades and/or other traffic control devices that should be used in conjunction with the Flashing Arrow Board.
4. The Flashing Arrow Board should be able to display the following symbols:

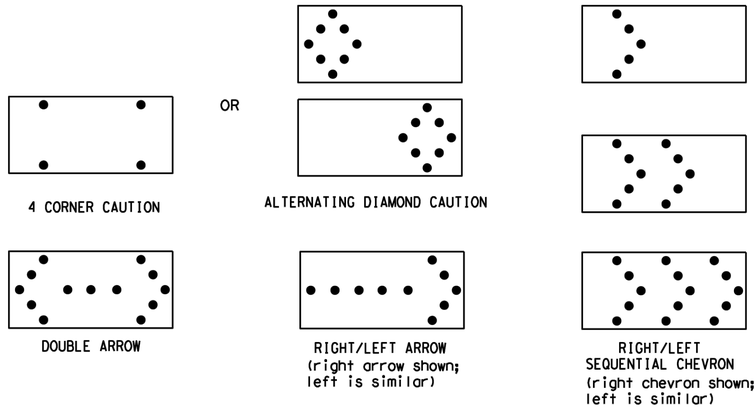

5. The "CAUTION" display consists of four corner lamps flashing simultaneously, or the Alternating Diamond Caution mode as shown.
6. The straight line caution display is NOT ALLOWED.
7. The Flashing Arrow Board shall be capable of minimum 50 percent dimming from rated lamp voltage. The flashing rate of the lamps shall not be less than 25 nor more than 40 flashes per minute.
8. Minimum lamp "on time" shall be approximately 50 percent for the flashing arrow and equal intervals of 25 percent for each sequential phase of the flashing chevron.
9. The sequential arrow display is NOT ALLOWED.
10. The flashing arrow display is the TxDOT standard; however, the sequential chevron display may be used during daylight operations.
11. The Flashing Arrow Board shall be mounted on a vehicle, trailer or other suitable support.
12. A Flashing Arrow Board SHALL NOT BE USED to laterally shift traffic.
13. A full matrix PCMS may be used to simulate a Flashing Arrow Board provided it meets visibility, flash rate and dimming requirements on this sheet for the same size arrow.
14. Minimum mounting height of trailer mounted Arrow Boards should be 7 feet from roadway to bottom of panel.

REQUIREMENTS			
TYPE	MINIMUM SIZE	MINIMUM NUMBER OF PANEL LAMPS	MINIMUM VISIBILITY DISTANCE
B	30 x 60	13	3/4 mile
C	48 x 96	15	1 mile

ATTENTION

Flashing Arrow Boards shall be equipped with automatic dimming devices.

WHEN NOT IN USE, REMOVE THE ARROW BOARD FROM THE RIGHT-OF-WAY OR PLACE THE ARROW BOARD BEHIND CONCRETE TRAFFIC BARRIER OR GUARDRAIL.

FLASHING ARROW BOARDS

TRUCK-MOUNTED ATTENUATORS

1. Truck-mounted attenuators (TMA) used on TxDOT facilities must meet the requirements outlined in the Manual for Assessing Safety Hardware (MASH).
2. Refer to the CWZTCD for the requirements of Level 2 or Level 3 TMAs.
3. Refer to the CWZTCD for a list of approved TMAs.
4. TMAs are required on freeways unless otherwise noted in the plans.
5. A TMA should be used anytime that it can be positioned 30 to 100 feet in advance of the area of crew exposure without adversely affecting the work performance.
6. The only reason a TMA should not be required is when a work area is spread down the roadway and the work crew is an extended distance from the TMA.

Texas Department of Transportation

Traffic Safety Division Standard

BARRICADE AND CONSTRUCTION ARROW PANEL, REFLECTORS, WARNING LIGHTS & ATTENUATOR

BC(7)-21

FILE: bc-21.dgn	DN: TxDOT	CK: TxDOT	DW: TxDOT	CK: TxDOT
©TxDOT November 2002	CONT	SECT	JOB	HIGHWAY
REVISIONS				
9-07 8-14	DIST	COUNTY		SHEET NO.
7-13 5-21				34

DISCLAIMER:
The use of this standard is governed by the "Texas Engineering Practice Act". No warranty of any kind is made by TxDOT for any purpose whatsoever. TxDOT assumes no responsibility for the conversion of this standard to other formats or for incorrect results or damages resulting from its use.

DATE:
FILE:

GENERAL NOTES

1. For long term stationary work zones on freeways, drums shall be used as the primary channelizing device.
2. For intermediate term stationary work zones on freeways, drums should be used as the primary channelizing device but may be replaced in tangent sections by vertical panels, or 42" two-piece cones. In tangent sections, one-piece cones may be used with the approval of the Engineer but only if personnel are present on the project at all times to maintain the cones in proper position and location.
3. For short term stationary work zones on freeways, drums are the preferred channelizing device but may be replaced in tapers, transitions and tangent sections by vertical panels, two-piece cones or one-piece cones as approved by the Engineer.
4. Drums and all related items shall comply with the requirements of the current version of the "Texas Manual on Uniform Traffic Control Devices" (TMUTCD) and the "Compliant Work Zone Traffic Control Devices List" (CWZTCD).
5. Drums, bases, and related materials shall exhibit good workmanship and shall be free from objectionable marks or defects that would adversely affect their appearance or serviceability.
6. The Contractor shall have a maximum of 24 hours to replace any plastic drums identified for replacement by the Engineer/Inspector. The replacement device must be an approved device.

GENERAL DESIGN REQUIREMENTS

Pre-qualified plastic drums shall meet the following requirements:

1. Plastic drums shall be a two-piece design; the "body" of the drum shall be the top portion and the "base" shall be the bottom.
2. The body and base shall lock together in such a manner that the body separates from the base when impacted by a vehicle traveling at a speed of 20 MPH or greater but prevents accidental separation due to normal handling and/or air turbulence created by passing vehicles.
3. Plastic drums shall be constructed of lightweight flexible, and deformable materials. The Contractor shall NOT use metal drums or single piece plastic drums as channelization devices or sign supports.
4. Drums shall present a profile that is a minimum of 18 inches in width at the 36 inch height when viewed from any direction. The height of drum unit (body installed on base) shall be a minimum of 36 inches and a maximum of 42 inches.
5. The top of the drum shall have a built-in handle for easy pickup and shall be designed to drain water and not collect debris. The handle shall have a minimum of two widely spaced 9/16 inch diameter holes to allow attachment of a warning light, warning reflector unit or approved compliant sign.
6. The exterior of the drum body shall have a minimum of four alternating orange and white retroreflective circumferential stripes not less than 4 inches nor greater than 8 inches in width. Any non-reflectorized space between any two adjacent stripes shall not exceed 2 inches in width.
7. Bases shall have a maximum width of 36 inches, a maximum height of 4 inches, and a minimum of two footholds of sufficient size to allow base to be held down while separating the drum body from the base.
8. Plastic drums shall be constructed of ultra-violet stabilized, orange, high-density polyethylene (HDPE) or other approved material.
9. Drum body shall have a maximum unballasted weight of 11 lbs.
10. Drum and base shall be marked with manufacturer's name and model number.

RETROREFLECTIVE SHEETING

1. The stripes used on drums shall be constructed of sheeting meeting the color and retroreflectivity requirements of Departmental Materials Specification DMS-8300, "Sign Face Materials." Type A or Type B reflective sheeting shall be supplied unless otherwise specified in the plans.
2. The sheeting shall be suitable for use on and shall adhere to the drum surface such that, upon vehicular impact, the sheeting shall remain adhered in-place and exhibit no delaminating, cracking, or loss of retroreflectivity other than that loss due to abrasion of the sheeting surface.

BALLAST

1. Unballasted bases shall be large enough to hold up to 50 lbs. of sand. This base, when filled with the ballast material, should weigh between 35 lbs (minimum) and 50 lbs (maximum). The ballast may be sand in one to three sandbags separate from the base, sand in a sand-filled plastic base, or other ballasting devices as approved by the Engineer. Stacking of sandbags will be allowed, however height of sandbags above pavement surface may not exceed 12 inches.
2. Bases with built-in ballast shall weigh between 40 lbs. and 50 lbs. Built-in ballast can be constructed of an integral crumb rubber base or a solid rubber base.
3. Recycled truck tire sidewalls may be used for ballast on drums approved for this type of ballast on the CWZTCD list.
4. The ballast shall not be heavy objects, water, or any material that would become hazardous to motorists, pedestrians, or workers when the drum is struck by a vehicle.
5. When used in regions susceptible to freezing, drums shall have drainage holes in the bottoms so that water will not collect and freeze becoming a hazard when struck by a vehicle.
6. Ballast shall not be placed on top of drums.
7. Adhesives may be used to secure base of drums to pavement.

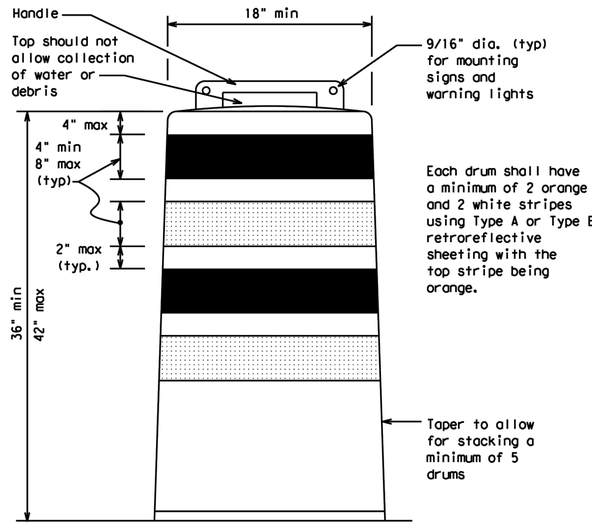

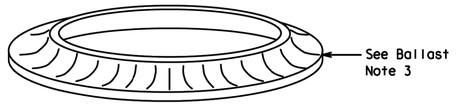

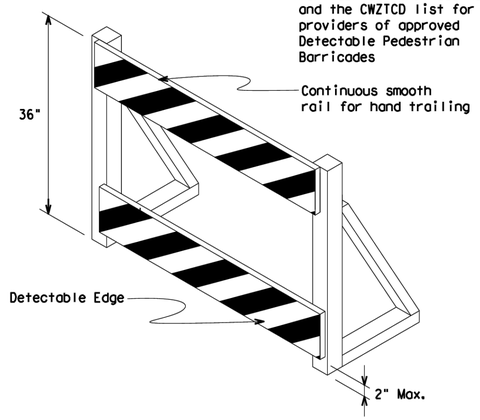

DETECTABLE PEDESTRIAN BARRICADES

1. When existing pedestrian facilities are disrupted, closed, or relocated in a TTC zone, the temporary facilities shall be detectable and include accessibility features consistent with the features present in the existing pedestrian facility. Refer to WZ(BTS-2) for Pedestrian Control requirements for Sidewalk Diversions, Sidewalk Detours and Crosswalk Closures.
2. Where pedestrians with visual disabilities normally use the closed sidewalk, a Detectable Pedestrian Barricade shall be placed across the full width of the closed sidewalk instead of a Type 3 Barricade.
3. Detectable pedestrian barricades similar to the one pictured above, longitudinal channelizing devices, some concrete barriers, and wood or chain link fencing with a continuous detectable edging can satisfactorily delineate a pedestrian path.
4. Tape, rope, or plastic chain strung between devices are not detectable, do not comply with the design standards in the "Americans with Disabilities Act Accessibility Guidelines (ADAAG)" and should not be used as a control for pedestrian movements.
5. Warning lights shall not be attached to detectable pedestrian barricades.
6. Detectable pedestrian barricades should use 8" nominal barricade rails as shown on BC(10) provided that the top rail provides a smooth continuous rail suitable for hand trailing with no splinters, burrs, or sharp edges.

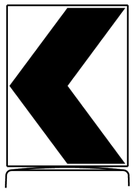

18" x 24" Sign
(Maximum Sign Dimension)
Chevron CW1-8, Opposing Traffic Lane Divider, Driveway sign D70a, Keep Right R4 series or other signs as approved by Engineer

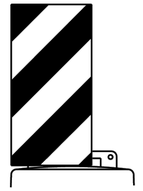

12" x 24"
Vertical Panel
mount with diagonals sloping down towards travel way

Plywood, Aluminum or Metal sign substrates shall NOT be used on plastic drums

SIGNS, CHEVRONS, AND VERTICAL PANELS MOUNTED ON PLASTIC DRUMS

1. Signs used on plastic drums shall be manufactured using substrates listed on the CWZTCD.
2. Chevrons and other work zone signs with an orange background shall be manufactured with Type B_{FL} or Type C_{FL} Orange sheeting meeting the color and retroreflectivity requirements of DMS-8300, "Sign Face Material," unless otherwise specified in the plans.
3. Vertical Panels shall be manufactured with orange and white sheeting meeting the requirements of DMS-8300 Type A or Type B. Diagonal stripes on Vertical Panels shall slope down toward the intended traveled lane.
4. Other sign messages (text or symbolic) may be used as approved by the Engineer. Sign dimensions shall not exceed 18 inches in width or 24 inches in height, except for the R9 series signs discussed in note 8 below.
5. Signs shall be installed using a 1/2 inch bolt (nominal) and nut, two washers, and one locking washer for each connection.
6. Mounting bolts and nuts shall be fully engaged and adequately torqued. Bolts should not extend more than 1/2 inch beyond nuts.
7. Chevrons may be placed on drums on the outside of curves, on merging tapers or on shifting tapers. When used in these locations, they may be placed on every drum or spaced not more than on every third drum. A minimum of three (3) should be used at each location called for in the plans.
8. R9-9, R9-10, R9-11 and R9-11a Sidewalk Closed signs which are 24 inches wide may be mounted on plastic drums, with approval of the Engineer.

Texas Department of Transportation

Traffic Safety Division Standard

BARRICADE AND CONSTRUCTION CHANNELIZING DEVICES

BC(8)-21

FILE: bc-21.dgn	DN: TxDOT	CK: TxDOT	DW: TxDOT	CK: TxDOT
©TxDOT November 2002	CONT	SECT	JOB	HIGHWAY
REVISIONS				
4-03 8-14	DIST	COUNTY		SHEET NO.
9-07 5-21				35
7-13				

102

DISCLAIMER:
The use of this standard is governed by the "Texas Engineering Practice Act". No warranty of any kind is made by TxDOT for any purpose whatsoever. TxDOT assumes no responsibility for the conversion of this standard to other formats or for incorrect results or damages resulting from its use.

DATE:
FILE:

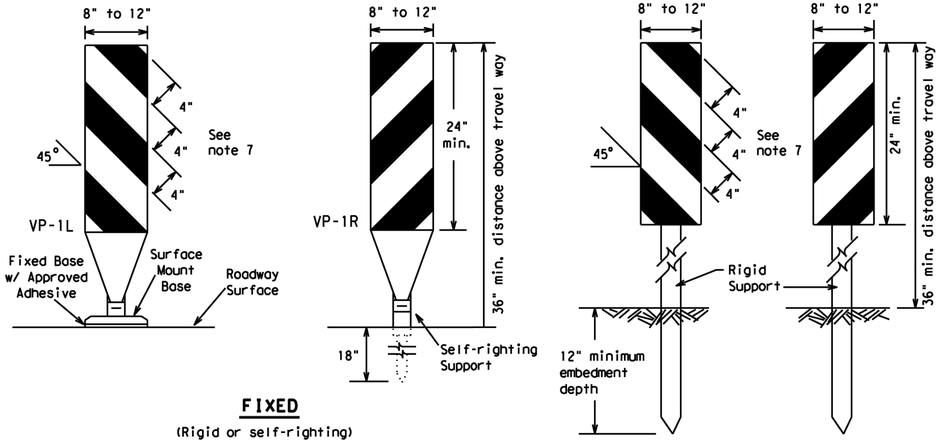

FIXED

(Rigid or self-righting)

DRIVEABLE

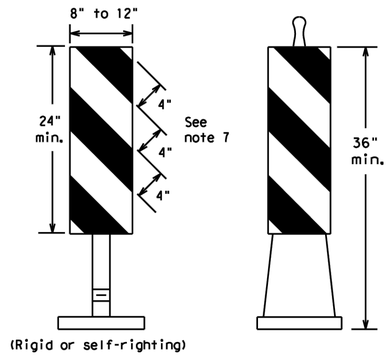

(Rigid or self-righting)

PORTABLE

1. Vertical Panels (VP's) are normally used to channelize traffic or divide opposing lanes of traffic.
2. VP's may be used in daytime or nighttime situations. They may be used at the edge of shoulder drop-offs and other areas such as lane transitions where positive daytime and nighttime delineation is required. The Engineer/Inspector shall refer to the Roadway Design Manual for additional requirements on the use VP's for drop-offs.
3. VP's should be mounted back to back if used at the edge of cuts adjacent to two-way two lane roadways. Stripes are to be reflective orange and reflective white and should always slope downward toward the travel lane.
4. VP's used on expressways and freeways or other high speed roadways, may have more than 270 square inches of retroreflective area facing traffic.
5. Self-righting supports are available with portable base. See "Compliant Work Zone Traffic Control Devices List" (CWZTCD).
6. Sheeting for the VP's shall be retroreflective Type A or Type B conforming to Departmental Material Specification DMS-8300, unless noted otherwise.
7. Where the height of reflective material on the vertical panel is 36 inches or greater, a panel stripe of 6 inches shall be used.

VERTICAL PANELS (VPs)

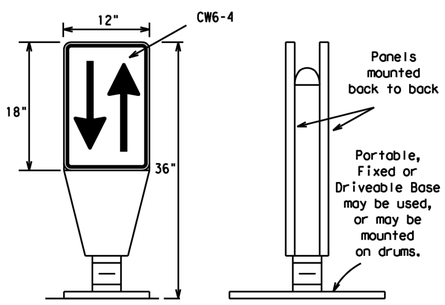

1. Opposing Traffic Lane Dividers (OTLD) are delineation devices designed to convert a normal one-way roadway section to two-way operation. OTLD's are used on temporary centerlines. The upward and downward arrows on the sign's face indicate the direction of traffic on either side of the divider. The base is secured to the pavement with an adhesive or rubber weight to minimize movement caused by a vehicle impact or wind gust.
2. The OTLD may be used in combination with 42" cones or VPs.
3. Spacing between the OTLD shall not exceed 500 feet. 42" cones or VPs placed between the OTLD's should not exceed 100 foot spacing.
4. The OTLD shall be orange with a black non-reflective legend. Sheeting for the OTLD shall be retroreflective Type B_{FL} or Type C_{FL} conforming to Departmental Material Specification DMS-8300, unless noted otherwise. The legend shall meet the requirements of DMS-8300.

OPPOSING TRAFFIC LANE DIVIDERS (OTLD)

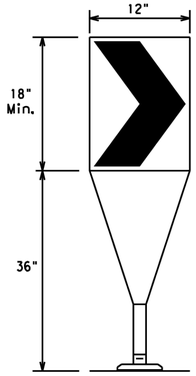

Fixed Base w/ Approved Adhesive (Driveable Base, or Flexible Support can be used)

1. The chevron shall be a vertical rectangle with a minimum size of 12 by 18 inches.
2. Chevrons are intended to give notice of a sharp change of alignment with the direction of travel and provide additional emphasis and guidance for vehicle operators with regard to changes in horizontal alignment of the roadway.
3. Chevrons, when used, shall be erected on the outside of a sharp curve or turn, or on the far side of an intersection. They shall be in line with and at right angles to approaching traffic. Spacing should be such that the motorist always has three in view, until the change in alignment eliminates its need.
4. To be effective, the chevron should be visible for at least 500 feet.
5. Chevrons shall be orange with a black nonreflective legend. Sheeting for the chevron shall be retroreflective Type B_{FL} or Type C_{FL} conforming to Departmental Material Specification DMS-8300, unless noted otherwise. The legend shall meet the requirements of DMS-8300.
6. For Long Term Stationary use on tapers or transitions on freeways and divided highways, self-righting chevrons may be used to supplement plastic drums but not to replace plastic drums.

CHEVRONS

GENERAL NOTES

1. Work Zone channelizing devices illustrated on this sheet may be installed in close proximity to traffic and are suitable for use on high or low speed roadways. The Engineer/Inspector shall ensure that spacing and placement is uniform and in accordance with the "Texas Manual on Uniform Traffic Control Devices" (TMUTCD).
2. Channelizing devices shown on this sheet may have a driveable, fixed or portable base. The requirement for self-righting channelizing devices must be specified in the General Notes or other plan sheets.
3. Channelizing devices on self-righting supports should be used in work zone areas where channelizing devices are frequently impacted by errant vehicles or vehicle related wind gusts making alignment of the channelizing devices difficult to maintain. Locations of these devices shall be detailed elsewhere in the plans. These devices shall conform to the TMUTCD and the "Compliant Work Zone Traffic Control Devices List" (CWZTCD).
4. The Contractor shall maintain devices in a clean condition and replace damaged, nonreflective, faded, or broken devices and bases as required by the Engineer/Inspector. The Contractor shall be required to maintain proper device spacing and alignment.
5. Portable bases shall be fabricated from virgin and/or recycled rubber. The portable bases shall weigh a minimum of 30 lbs.
6. Pavement surfaces shall be prepared in a manner that ensures proper bonding between the adhesives, the fixed mount bases and the pavement surface. Adhesives shall be prepared and applied according to the manufacturer's recommendations.
7. The installation and removal of channelizing devices shall not cause detrimental effects to the final pavement surfaces, including pavement surface discoloration or surface integrity. Driveable bases shall not be permitted on final pavement surfaces. The Engineer/Inspector shall approve all application and removal procedures of fixed bases.

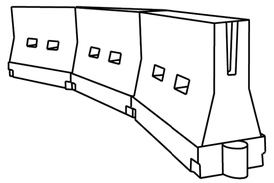

LONGITUDINAL CHANNELIZING DEVICES (LCD)

1. LCDs are crashworthy, lightweight, deformable devices that are highly visible, have good target value and can be connected together. They are not designed to contain or redirect a vehicle on impact.
2. LCDs may be used instead of a line of cones or drums.
3. LCDs shall be placed in accordance to application and installation requirements specific to the device, and used only when shown on the CWZTCD list.
4. LCDs should not be used to provide positive protection for obstacles, pedestrians or workers.
5. LCDs shall be supplemented with retroreflective delineation as required for temporary barriers on BC(7) when placed roughly parallel to the travel lanes.
6. LCDs used as barricades placed perpendicular to traffic should have at least one row of reflective sheeting meeting the requirements for barricade rails as shown on BC(10). Place reflective sheeting near the top of the LCD along the full length of the device.

WATER BALLASTED SYSTEMS USED AS BARRIERS

1. Water ballasted systems used as barriers shall not be used solely to channelize road users, but also to protect the work space per the appropriate Manual for Assessing Safety Hardware (MASH) crashworthiness requirements based on roadway speed and barrier application.
2. Water ballasted systems used to channelize vehicular traffic shall be supplemented with retroreflective delineation or channelizing devices to improve daytime/nighttime visibility. They may also be supplemented with pavement markings.
3. Water ballasted systems used as barriers shall be placed in accordance to application and installation requirements specific to the device, and used only when shown on the CWZTCD list.
4. Water ballasted systems used as barriers should not be used for a merging taper except in low speed (less than 45 MPH) urban areas. When used on a taper in a low speed urban area, the taper shall be delineated and the taper length should be designed to optimize road user operations considering the available geometric conditions.
5. When water ballasted systems used as barriers have blunt ends exposed to traffic, they should be attenuated as per manufacturer recommendations or flared to a point outside the clear zone.

If used to channelize pedestrians, longitudinal channelizing devices or water ballasted systems must have a continuous detectable bottom for users of long canes and the top of the unit shall not be less than 32 inches in height.

HOLLOW OR WATER BALLASTED SYSTEMS USED AS LONGITUDINAL CHANNELIZING DEVICES OR BARRIERS

Posted Speed	Formula	Minimum Desirable Taper Lengths ** 10' Offset	11' Offset	12' Offset	Suggested Maximum Spacing of Channelizing Devices: On a Taper	On a Tangent
30	$L = \frac{WS^2}{60}$	150'	165'	180'	30'	60'
35		205'	225'	245'	35'	70'
40		265'	295'	320'	40'	80'
45	L = WS	450'	495'	540'	45'	90'
50		500'	550'	600'	50'	100'
55		550'	605'	660'	55'	110'
60		600'	660'	720'	60'	120'
65		650'	715'	780'	65'	130'
70		700'	770'	840'	70'	140'
75		750'	825'	900'	75'	150'
80		800'	880'	960'	80'	160'

** Taper lengths have been rounded off.
L=Length of Taper (FT.) W=Width of Offset (FT.)
S=Posted Speed (MPH)

SUGGESTED MAXIMUM SPACING OF CHANNELIZING DEVICES AND MINIMUM DESIRABLE TAPER LENGTHS

Texas Department of Transportation

Traffic Safety Division Standard

BARRICADE AND CONSTRUCTION CHANNELIZING DEVICES

BC(9)-21

FILE: bc-21.dgn	DN: TxDOT	CK: TxDOT	DW: TxDOT	CK: TxDOT
©TxDOT November 2002	CONT	SECT	JOB	HIGHWAY
REVISIONS				
9-07 8-14	DIST	COUNTY		SHEET NO.
7-13 5-21				36

DISCLAIMER:
The use of this standard is governed by the "Texas Engineering Practice Act". No warranty of any kind is made by TxDOT for any purpose whatsoever. TxDOT assumes no responsibility for the conversion of this standard to other formats or for incorrect results or damages resulting from its use.

TYPE 3 BARRICADES

1. Refer to the Compliant Work Zone Traffic Control Devices List (CWZTCD) for details of the Type 3 Barricades and a list of all materials used in the construction of Type 3 Barricades.
2. Type 3 Barricades shall be used at each end of construction projects closed to all traffic.
3. Barricades extending across a roadway should have stripes that slope downward in the direction toward which traffic must turn in detouring. When both right and left turns are provided, the chevron striping may slope downward in both directions from the center of the barricade. Where no turns are provided at a closed road, striping should slope downward in both directions toward the center of roadway.
4. Striping of rails, for the right side of the roadway, should slope downward to the left. For the left side of the roadway, striping should slope downward to the right.
5. Identification markings may be shown only on the back of the barricade rails. The maximum height of letters and/or company logos used for identification shall be 1".
6. Barricades shall not be placed parallel to traffic unless an adequate clear zone is provided.
7. Warning lights shall NOT be installed on barricades.
8. Where barricades require the use of weights to keep from turning over, the use of sandbags with dry, cohesionless sand is recommended. The sandbags will be tied shut to keep the sand from spilling and to maintain a constant weight. Sand bags shall not be stacked in a manner that covers any portion of a barricade rails reflective sheeting. Rock, concrete, iron, steel or other solid objects will NOT be permitted. Sandbags should weigh a minimum of 35 lbs and a maximum of 50 lbs. Sandbags shall be made of a durable material that tears upon vehicular impact. Rubber (such as tire inner tubes) shall not be used for sandbags. Sandbags shall only be placed along or upon the base supports of the device and shall not be suspended above ground level or hung with rope, wire, chains or other fasteners.
9. Sheeting for barricades shall be retroreflective Type A or Type B conforming to Departmental Material Specification DMS-8300 unless otherwise noted.

Barricades shall NOT be used as a sign support.

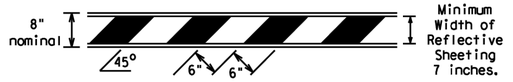

TYPICAL STRIPING DETAIL FOR BARRICADE RAIL

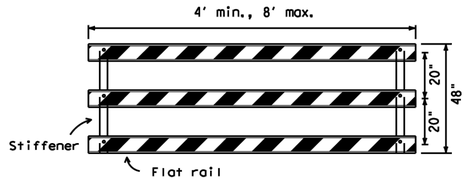

Stiffener may be inside or outside of support, but no more than 2 stiffeners shall be allowed on one barricade.

TYPICAL PANEL DETAIL FOR SKID OR POST TYPE BARRICADES

Each roadway of a divided highway shall be barricaded in the same manner.

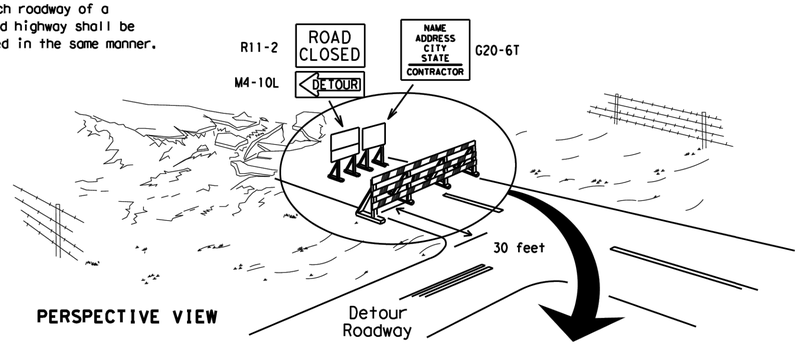

PERSPECTIVE VIEW

The three rails on Type 3 barricades shall be reflectorized orange and reflective white stripes on one side facing one-way traffic and both sides for two-way traffic.

Barricade striping should slant downward in the direction of detour.

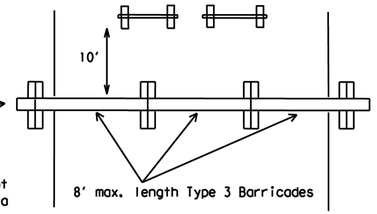

PLAN VIEW

1. Signs should be mounted on independent supports at a 7 foot mounting height in center of roadway. The signs should be a minimum of 10 feet behind Type 3 Barricades.
2. Advance signing shall be as specified elsewhere in the plans.

TYPE 3 BARRICADE (POST AND SKID) TYPICAL APPLICATION

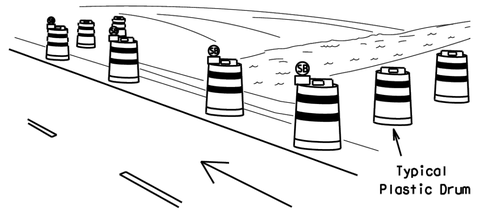

PERSPECTIVE VIEW

1. Where positive redirectional capability is provided, drums may be omitted.
2. Plastic construction fencing may be used with drums for safety as required in the plans.
3. Vertical Panels on flexible support may be substituted for drums when the shoulder width is less than 4 feet.
4. When the shoulder width is greater than 12 feet, steady-burn lights may be omitted if drums are used.
5. Drums must extend the length of the culvert widening.

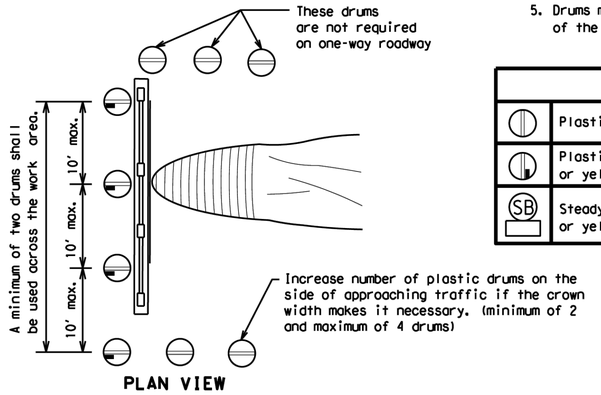

LEGEND	
	Plastic drum
	Plastic drum with steady burn light or yellow warning reflector
SB	Steady burn warning light or yellow warning reflector

PLAN VIEW

CULVERT WIDENING OR OTHER ISOLATED WORK WITHIN THE PROJECT LIMITS

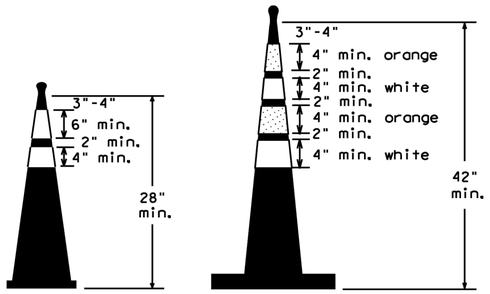

Two-Piece cones

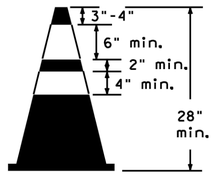

One-Piece cones

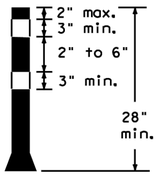

Tubular Marker

28" Cones shall have a minimum weight of 9 1/2 lbs.

42" 2-piece cones shall have a minimum weight of 30 lbs. including base.

1. Traffic cones and tubular markers shall be predominantly orange, and meet the height and weight requirements shown above.
2. One-piece cones have the body and base of the cone molded in one consolidated unit. Two-piece cones have a cone shaped body and a separate rubber base, or ballast, that is added to keep the device upright and in place.
3. Two-piece cones may have a handle or loop extending up to 8" above the minimum height shown, in order to aid in retrieving the device.
4. Cones or tubular markers shall have white or white and orange reflective bands as shown above. The reflective bands shall have a smooth, sealed outer surface and meet the requirements of Departmental Material Specification DMS-8300 Type A or Type B.
5. 28" cones and tubular markers are generally suitable for short duration and short-term stationary work as defined on BC(4). These should not be used for intermediate-term or long-term stationary work unless personnel is on-site to maintain them in their proper upright position.
6. 42" two-piece cones, vertical panels or drums are suitable for all work zone durations.
7. Cones or tubular markers used on each project should be of the same size and shape.

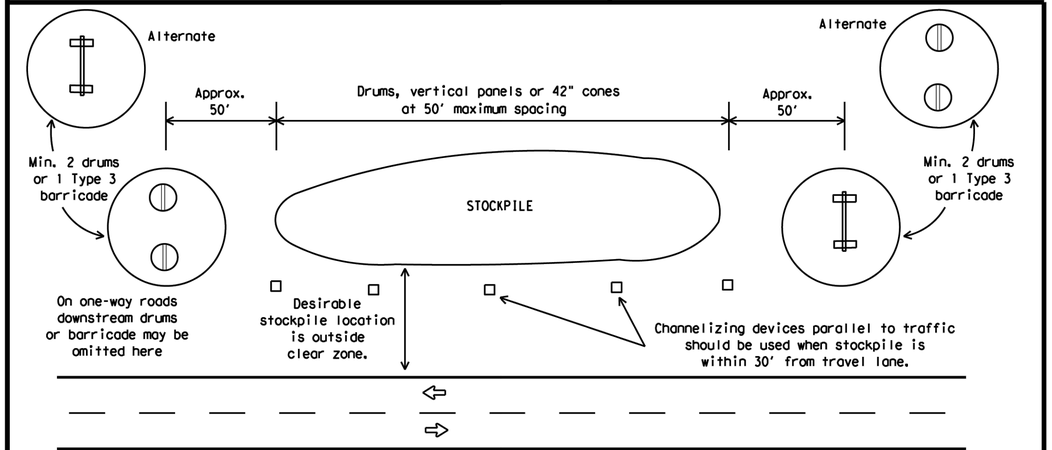

TRAFFIC CONTROL FOR MATERIAL STOCKPILES

SHEET 10 OF 12

Texas Department of Transportation

Traffic Safety Division Standard

BARRICADE AND CONSTRUCTION CHANNELIZING DEVICES

BC(10)-21

FILE: bc-21.dgn	DN: TxDOT	CK: TxDOT	DW: TxDOT	CK: TxDOT
© TxDOT November 2002	CONT	SECT	JOB	HIGHWAY
REVISIONS 9-07 8-14 7-13 5-21	DIST	COUNTY		SHEET NO. 37

DATE:
FILE:

104

DISCLAIMER:
The use of this standard is governed by the "Texas Engineering Practice Act". No warranty of any kind is made by TxDOT for any purpose whatsoever. TxDOT assumes no responsibility for the conversion of this standard to other formats or for incorrect results or damages resulting from its use.

DATE:
FILE:

WORK ZONE PAVEMENT MARKINGS

GENERAL

1. The Contractor shall be responsible for maintaining work zone and existing pavement markings, in accordance with the standard specifications and special provisions, on all roadways open to traffic within the CSJ limits unless otherwise stated in the plans.
2. Color, patterns and dimensions shall be in conformance with the "Texas Manual on Uniform Traffic Control Devices" (TMUTCD).
3. Additional supplemental pavement marking details may be found in the plans or specifications.
4. Pavement markings shall be installed in accordance with the TMUTCD and as shown on the plans.
5. When short term markings are required on the plans, short term markings shall conform with the TMUTCD, the plans and details as shown on the Standard Plan Sheet WZ(STPM).
6. When standard pavement markings are not in place and the roadway is opened to traffic, DO NOT PASS signs shall be erected to mark the beginning of the sections where passing is prohibited and PASS WITH CARE signs at the beginning of sections where passing is permitted.
7. All work zone pavement markings shall be installed in accordance with Item 662, "Work Zone Pavement Markings."

RAISED PAVEMENT MARKERS

1. Raised pavement markers are to be placed according to the patterns on BC(12).
2. All raised pavement markers used for work zone markings shall meet the requirements of Item 672, "RAISED PAVEMENT MARKERS" and Departmental Material Specification DMS-4200 or DMS-4300.

PREFABRICATED PAVEMENT MARKINGS

1. Removable prefabricated pavement markings shall meet the requirements of DMS-8241.
2. Non-removable prefabricated pavement markings (foil back) shall meet the requirements of DMS-8240.

MAINTAINING WORK ZONE PAVEMENT MARKINGS

1. The Contractor will be responsible for maintaining work zone pavement markings within the work limits.
2. Work zone pavement markings shall be inspected in accordance with the frequency and reporting requirements of work zone traffic control device inspections as required by Form 599.
3. The markings should provide a visible reference for a minimum distance of 300 feet during normal daylight hours and 160 feet when illuminated by automobile low-beam headlights at night, unless sight distance is restricted by roadway geometrics.
4. Markings failing to meet this criteria within the first 30 days after placement shall be replaced at the expense of the Contractor as per Specification Item 662.

REMOVAL OF PAVEMENT MARKINGS

1. Pavement markings that are no longer applicable, could create confusion or direct a motorist toward or into the closed portion of the roadway shall be removed or obliterated before the roadway is opened to traffic.
2. The above shall not apply to detours in place for less than three days, where flaggers and/or sufficient channelizing devices are used in lieu of markings to outline the detour route.
3. Pavement markings shall be removed to the fullest extent possible, so as not to leave a discernable marking. This shall be by any method approved by TxDOT Specification Item 677 for "Eliminating Existing Pavement Markings and Markers".
4. The removal of pavement markings may require resurfacing or seal coating portions of the roadway as described in Item 677.
5. Subject to the approval of the Engineer, any method that proves to be successful on a particular type pavement may be used.
6. Blast cleaning may be used but will not be required unless specifically shown in the plans.
7. Over-painting of the markings SHALL NOT BE permitted.
8. Removal of raised pavement markers shall be as directed by the Engineer.
9. Removal of existing pavement markings and markers will be paid for directly in accordance with Item 677, "ELIMINATING EXISTING PAVEMENT MARKINGS AND MARKERS," unless otherwise stated in the plans.
10. Black-out marking tape may be used to cover conflicting existing markings for periods less than two weeks when approved by the Engineer.

Temporary Flexible-Reflective Roadway Marker Tabs

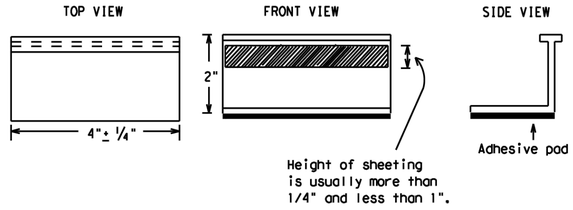

STAPLES OR NAILS SHALL NOT BE USED TO SECURE TEMPORARY FLEXIBLE-REFLECTIVE ROADWAY MARKER TABS TO THE PAVEMENT SURFACE

1. Temporary flexible-reflective roadway marker tabs used as guidemarks shall meet the requirements of DMS-8242.
2. Tabs detailed on this sheet are to be inspected and accepted by the Engineer or designated representative. Sampling and testing is not normally required, however at the option of the Engineer, either "A" or "B" below may be imposed to assure quality before placement on the roadway.
   A. Select five (5) or more tabs at random from each lot or shipment and submit to the Construction Division, Materials and Pavement Section to determine specification compliance.
   B. Select five (5) tabs and perform the following test. Affix five (5) tabs at 24 inch intervals on an asphaltic pavement in a straight line. Using a medium size passenger vehicle or pickup, run over the markers with the front and rear tires at a speed of 35 to 40 miles per hour, four (4) times in each direction. No more than one (1) out of the five (5) reflective surfaces shall be lost or displaced as a result of this test.
3. Small design variances may be noted between tab manufacturers.
4. See Standard Sheet WZ(STPM) for tab placement on new pavements. See Standard Sheet TCP(7-1) for tab placement on seal coat work.

RAISED PAVEMENT MARKERS USED AS GUIDEMARKS

1. Raised pavement markers used as guidemarks shall be from the approved product list, and meet the requirements of DMS-4200.
2. All temporary construction raised pavement markers provided on a project shall be of the same manufacturer.
3. Adhesive for guidemarks shall be bituminous material hot applied or butyl rubber pad for all surfaces, or thermoplastic for concrete surfaces.

Guidemarks shall be designated as:
YELLOW - (two amber reflective surfaces with yellow body).
WHITE - (one silver reflective surface with white body).

DEPARTMENTAL MATERIAL SPECIFICATIONS	
PAVEMENT MARKERS (REFLECTORIZED)	DMS-4200
TRAFFIC BUTTONS	DMS-4300
EPOXY AND ADHESIVES	DMS-6100
BITUMINOUS ADHESIVE FOR PAVEMENT MARKERS	DMS-6130
PERMANENT PREFABRICATED PAVEMENT MARKINGS	DMS-8240
TEMPORARY REMOVABLE, PREFABRICATED PAVEMENT MARKINGS	DMS-8241
TEMPORARY FLEXIBLE, REFLECTIVE ROADWAY MARKER TABS	DMS-8242

A list of prequalified reflective raised pavement markers, non-reflective traffic buttons, roadway marker tabs and other pavement markings can be found at the Material Producer List web address shown on BC(1).

Texas Department of Transportation

Traffic Safety Division Standard

BARRICADE AND CONSTRUCTION PAVEMENT MARKINGS

BC(11)-21

FILE: bc-21.dgn	DN: TxDOT	CK: TxDOT	DW: TxDOT	CK: TxDOT
©TxDOT February 1998	CONT	SECT	JOB	HIGHWAY
REVISIONS 2-98 9-07 5-21 1-02 7-13 11-02 8-14	DIST	COUNTY		SHEET NO. 38

DISCLAIMER:
The use of this standard is governed by the "Texas Engineering Practice Act". No warranty of any kind is made by TxDOT for any purpose whatsoever. TxDOT assumes no responsibility for the conversion of this standard to other formats or for incorrect results or damages resulting from its use.

DATE:
FILE:

PAVEMENT MARKING PATTERNS

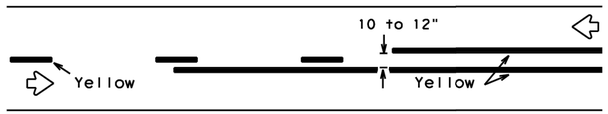

REFLECTORIZED PAVEMENT MARKINGS - PATTERN A

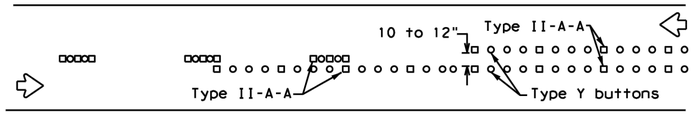

RAISED PAVEMENT MARKERS - PATTERN A

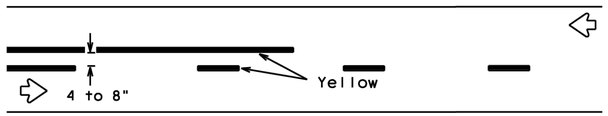

REFLECTORIZED PAVEMENT MARKINGS - PATTERN B

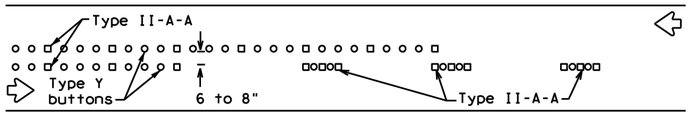

RAISED PAVEMENT MARKERS - PATTERN B

Pattern A is the TXDOT Standard, however Pattern B may be used if approved by the Engineer.
Prefabricated markings may be substituted for reflectorized pavement markings.

CENTER LINE & NO-PASSING ZONE BARRIER LINES FOR TWO-LANE, TWO-WAY HIGHWAYS

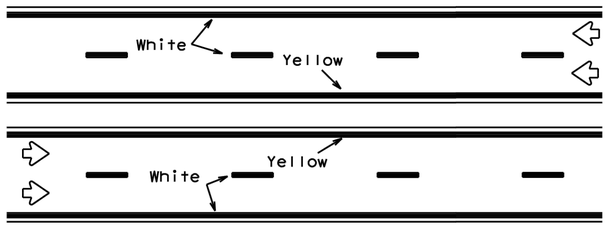

REFLECTORIZED PAVEMENT MARKINGS

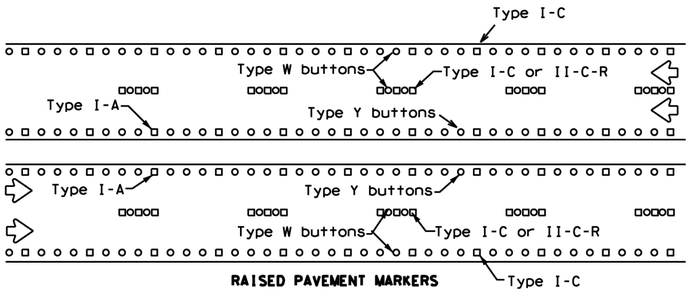

RAISED PAVEMENT MARKERS

Prefabricated markings may be substituted for reflectorized pavement markings.

EDGE & LANE LINES FOR DIVIDED HIGHWAY

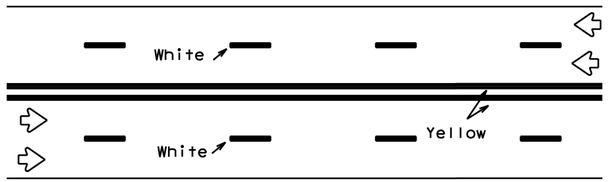

REFLECTORIZED PAVEMENT MARKINGS

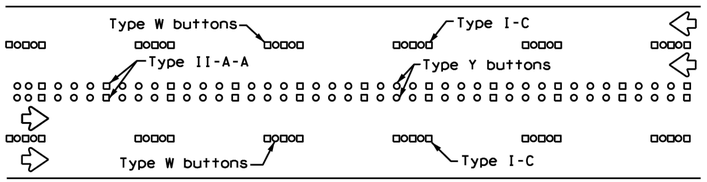

RAISED PAVEMENT MARKERS

Prefabricated markings may be substituted for reflectorized pavement markings.

LANE & CENTER LINES FOR MULTILANE UNDIVIDED HIGHWAYS

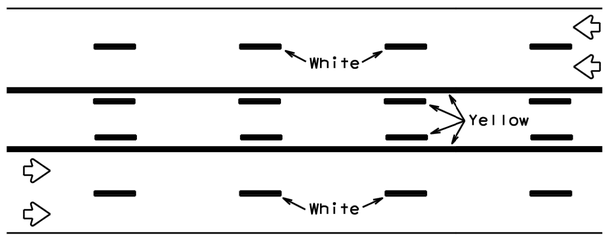

REFLECTORIZED PAVEMENT MARKINGS

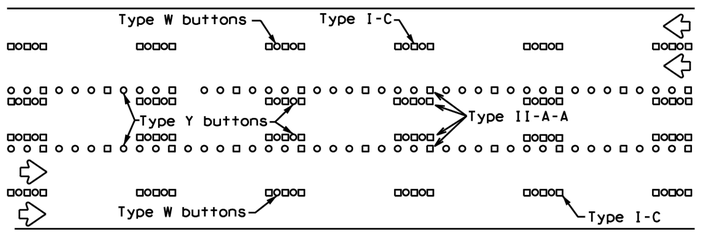

RAISED PAVEMENT MARKERS

Prefabricated markings may be substituted for reflectorized pavement markings.

TWO-WAY LEFT TURN LANE

STANDARD WORK ZONE PAVEMENT MARKINGS DETAILS

SOLID LINES

DOUBLE NO-PASSING LINE

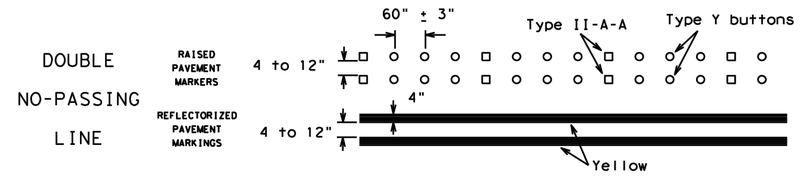

EDGE LINE OR SINGLE NO-PASSING LINE

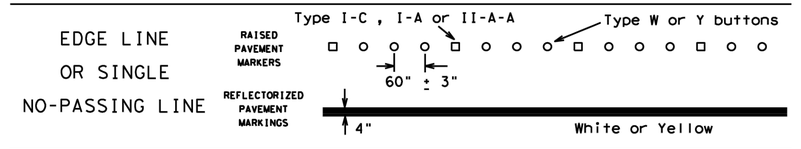

WIDE LINE

(FOR LEFT TURN CHANNELIZING LINE OR CHANNELIZING LINE USED TO DISCOURAGE LANE CHANGING.)

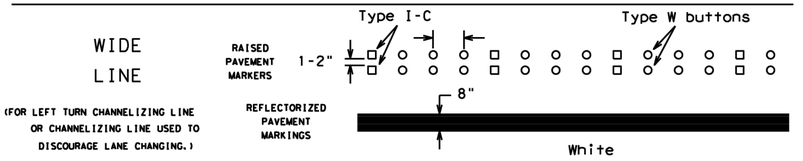

BROKEN LINES

CENTER LINE OR LANE LINE

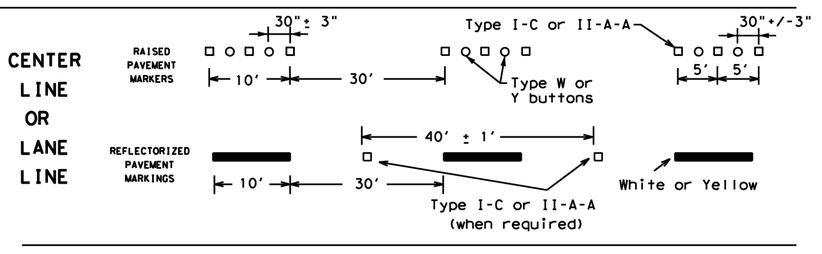

AUXILIARY OR LANEDROP LINE

REMOVABLE MARKINGS WITH RAISED PAVEMENT MARKERS

If raised pavement markers are used to supplement REMOVABLE markings, the markers shall be applied to the top of the tape at the approximate mid length of tape used for broken lines or at 20 foot spacing for solid lines. This allows an easier removal of raised pavement markers and tape.

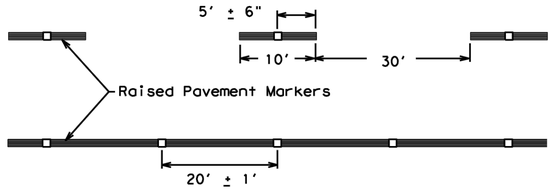

Centerline only - not to be used on edge lines

Raised pavement markers used as standard pavement markings shall be from the approved products list and meet the requirements of Item 672 "RAISED PAVEMENT MARKERS."

Texas Department of Transportation

Traffic Safety Division Standard

BARRICADE AND CONSTRUCTION PAVEMENT MARKING PATTERNS

BC(12)-21

FILE: bc-21.dgn	DN: TxDOT	CK: TxDOT	DW: TxDOT	CK: TxDOT
©TxDOT February 1998	CONT	SECT	JOB	HIGHWAY
REVISIONS 1-97 9-07 5-21 2-98 7-13 11-02 8-14	DIST	COUNTY		SHEET NO. 39

106

DISCLAIMER:
The use of this standard is governed by the "Texas Engineering Practice Act". No warranty of any kind is made by TxDOT for any purpose whatsoever. TxDOT assumes no responsibility for the conversion of this standard to other formats or for incorrect results or damages resulting from its use.

DATE:
FILE:

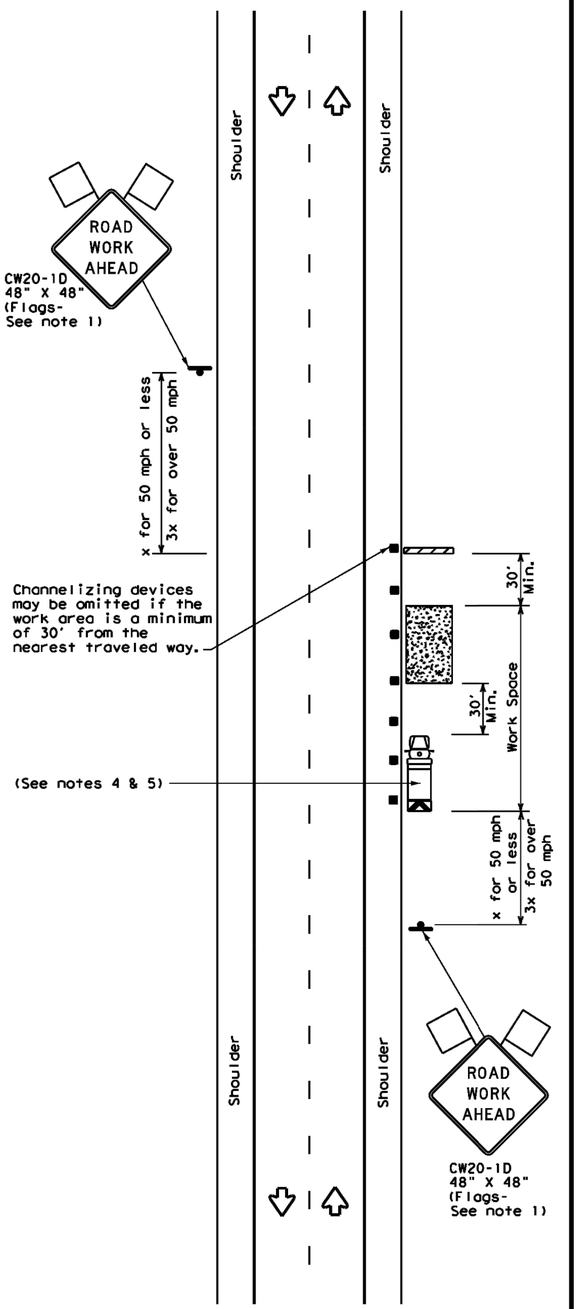

TCP (2-1a)

WORK SPACE NEAR SHOULDER
Conventional Roads

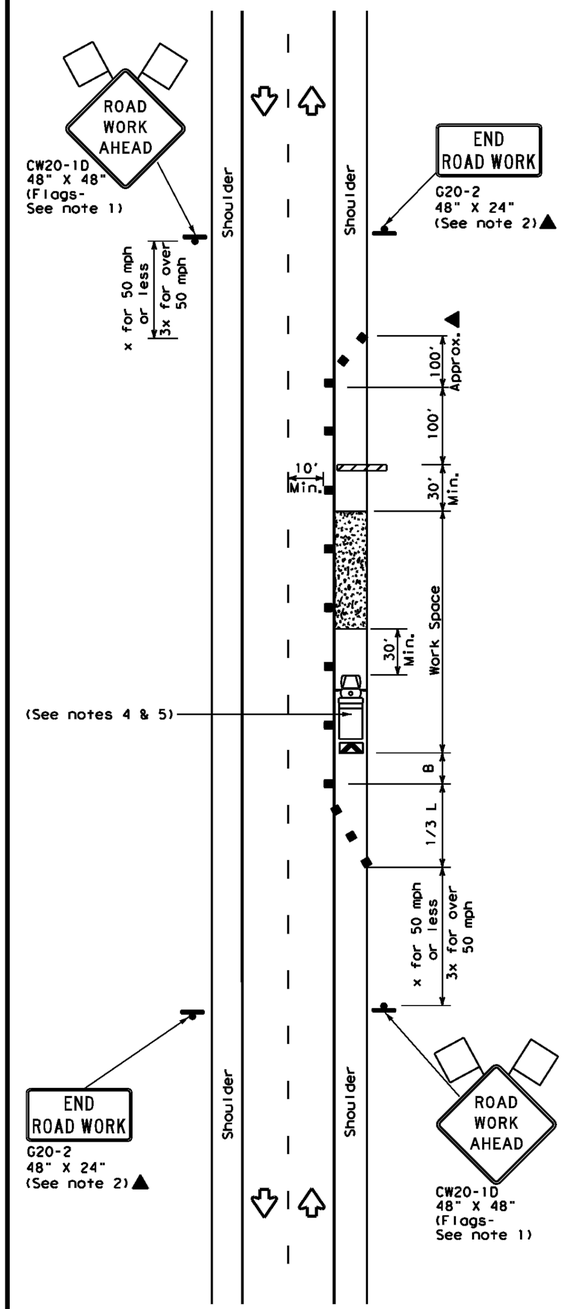

TCP (2-1b)

WORK SPACE ON SHOULDER
Conventional Roads

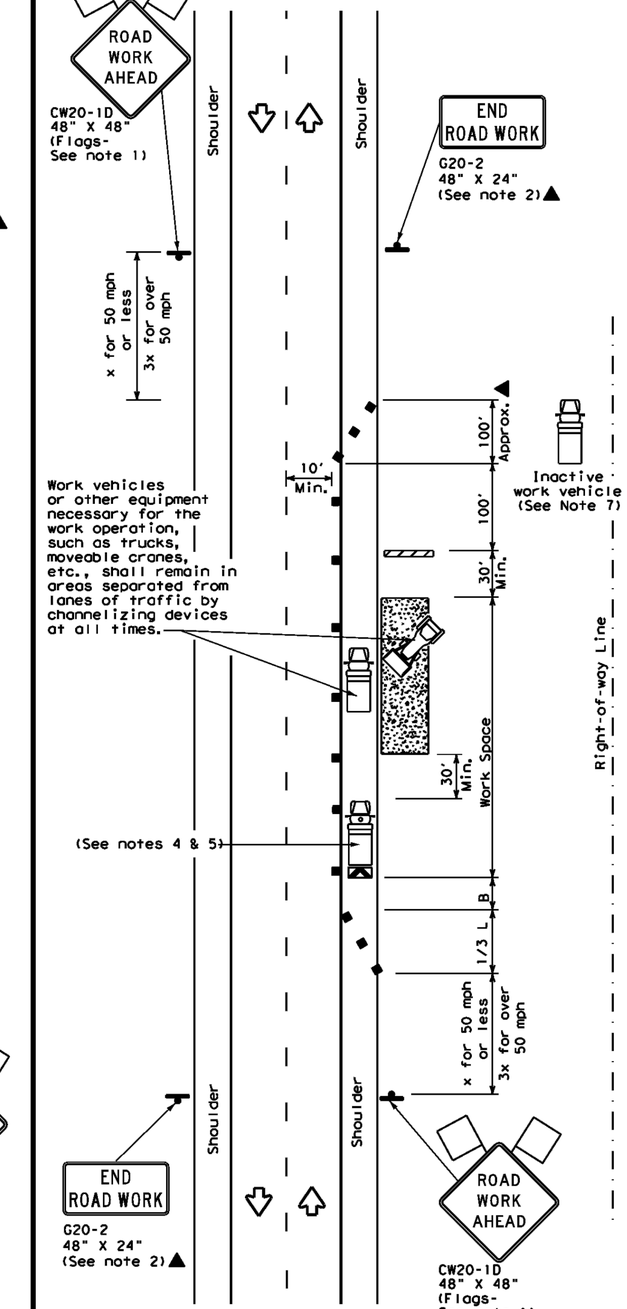

TCP (2-1c)

WORK VEHICLES ON SHOULDER
Conventional Roads

LEGEND			
	Type 3 Barricade	■ ■	Channelizing Devices
	Heavy Work Vehicle		Truck Mounted Attenuator (TMA)
	Trailer Mounted Flashing Arrow Board	M	Portable Changeable Message Sign (PCMS)
	Sign		Traffic Flow
	Flag		Flagger

Posted Speed *	Formula	Minimum Desirable Taper Lengths ** 10' Offset	11' Offset	12' Offset	Suggested Maximum Spacing of Channelizing Devices: On a Taper	On a Tangent	Minimum Sign Spacing "X" Distance	Suggested Longitudinal Buffer Space "B"
30	$L=\frac{WS^2}{60}$	150'	165'	180'	30'	60'	120'	90'
35		205'	225'	245'	35'	70'	160'	120'
40		265'	295'	320'	40'	80'	240'	155'
45	L=WS	450'	495'	540'	45'	90'	320'	195'
50		500'	550'	600'	50'	100'	400'	240'
55		550'	605'	660'	55'	110'	500'	295'
60		600'	660'	720'	60'	120'	600'	350'
65		650'	715'	780'	65'	130'	700'	410'
70		700'	770'	840'	70'	140'	800'	475'
75		750'	825'	900'	75'	150'	900'	540'

* Conventional Roads Only
** Taper lengths have been rounded off.
L=Length of Taper(FT) W=Width of Offset(FT) S=Posted Speed(MPH)

TYPICAL USAGE				
MOBILE	SHORT DURATION	SHORT TERM STATIONARY	INTERMEDIATE TERM STATIONARY	LONG TERM STATIONARY
	✓	✓	✓	✓

GENERAL NOTES

1. Flags attached to signs where shown, are REQUIRED.
2. All traffic control devices illustrated are REQUIRED, except those denoted with the triangle symbol may be omitted when stated in the plans, or for routine maintenance work, when approved by the Engineer.
3. Stockpiled material should be placed a minimum of 30 feet from nearest traveled way.
4. Shadow Vehicle with TMA and high intensity rotating, flashing, oscillating or strobe lights. A Shadow Vehicle with a TMA should be used anytime it can be positioned 30 to 100 feet in advance of the area of crew exposure without adversely affecting the performance or quality of the work. If workers are no longer present but road or work conditions require the traffic control to remain in place, Type 3 Barricades or other channelizing devices may be substituted for the Shadow Vehicle and TMA.
5. Additional Shadow Vehicles with TMAs may be positioned off the paved surface, next to those shown in order to protect a wider work space.
6. See TCP(5-1) for shoulder work on divided highways, expressways and freeways.
7. Inactive work vehicles or other equipment should be parked near the right-of-way line and not parked on the paved shoulder.
8. CW21-5 "SHOULDER WORK" signs may be used in place of CW20-1D "ROAD WORK AHEAD" signs for shoulder work on conventional roadways.

Texas Department of Transportation

Traffic Operations Division Standard

TRAFFIC CONTROL PLAN CONVENTIONAL ROAD SHOULDER WORK

TCP(2-1)-18

FILE: tcp2-1-18.dgn	DN:	CK:	DW:	CK:
© TxDOT December 1985	CONT	SECT	JOB	HIGHWAY
REVISIONS 2-94 4-98 8-95 2-12 1-97 2-18	DIST	COUNTY		SHEET NO. 40

161

DISCLAIMER:
The use of this standard is governed by the "Texas Engineering Practice Act". No warranty of any kind is made by TxDOT for any purpose whatsoever. TxDOT assumes no responsibility for the conversion of this standard to other formats or for incorrect results or damages resulting from its use.

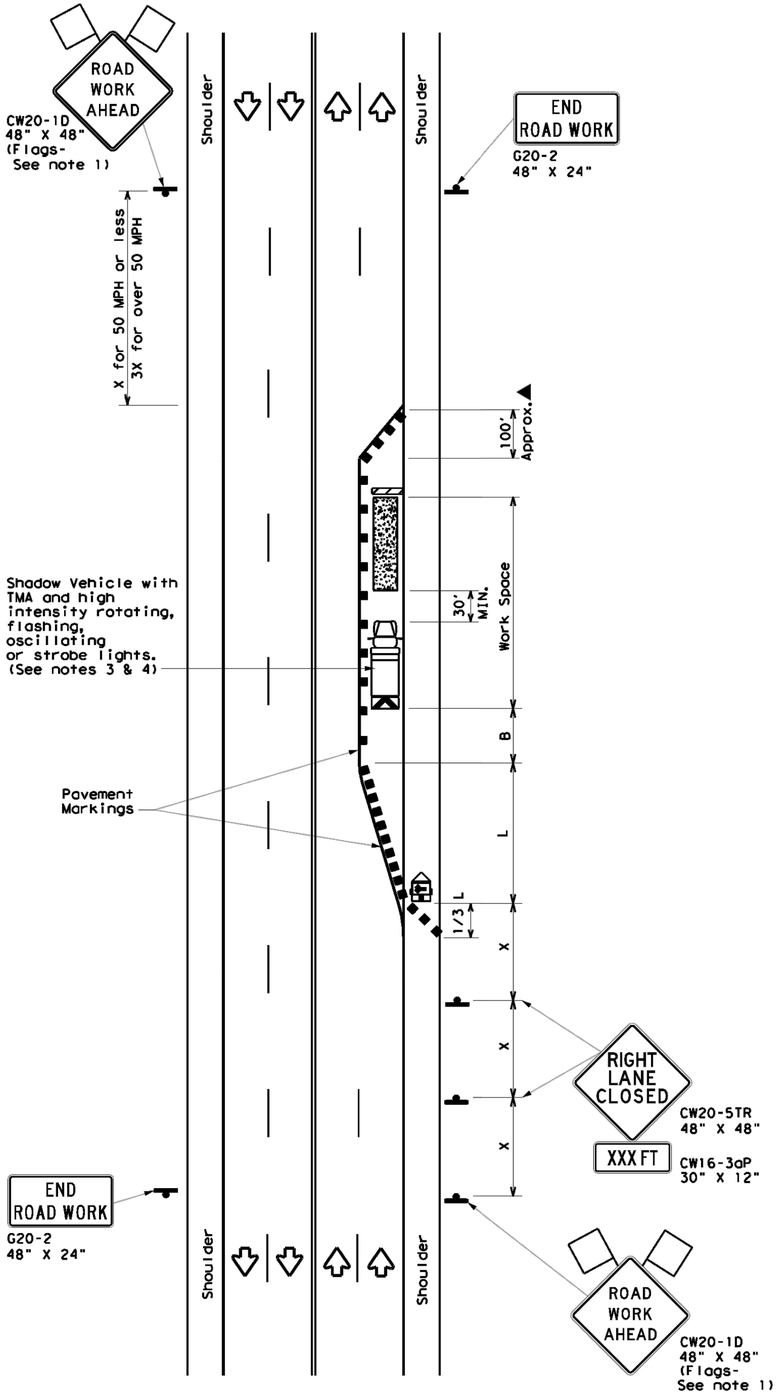

TCP (2-5a)

ONE LANE CLOSED

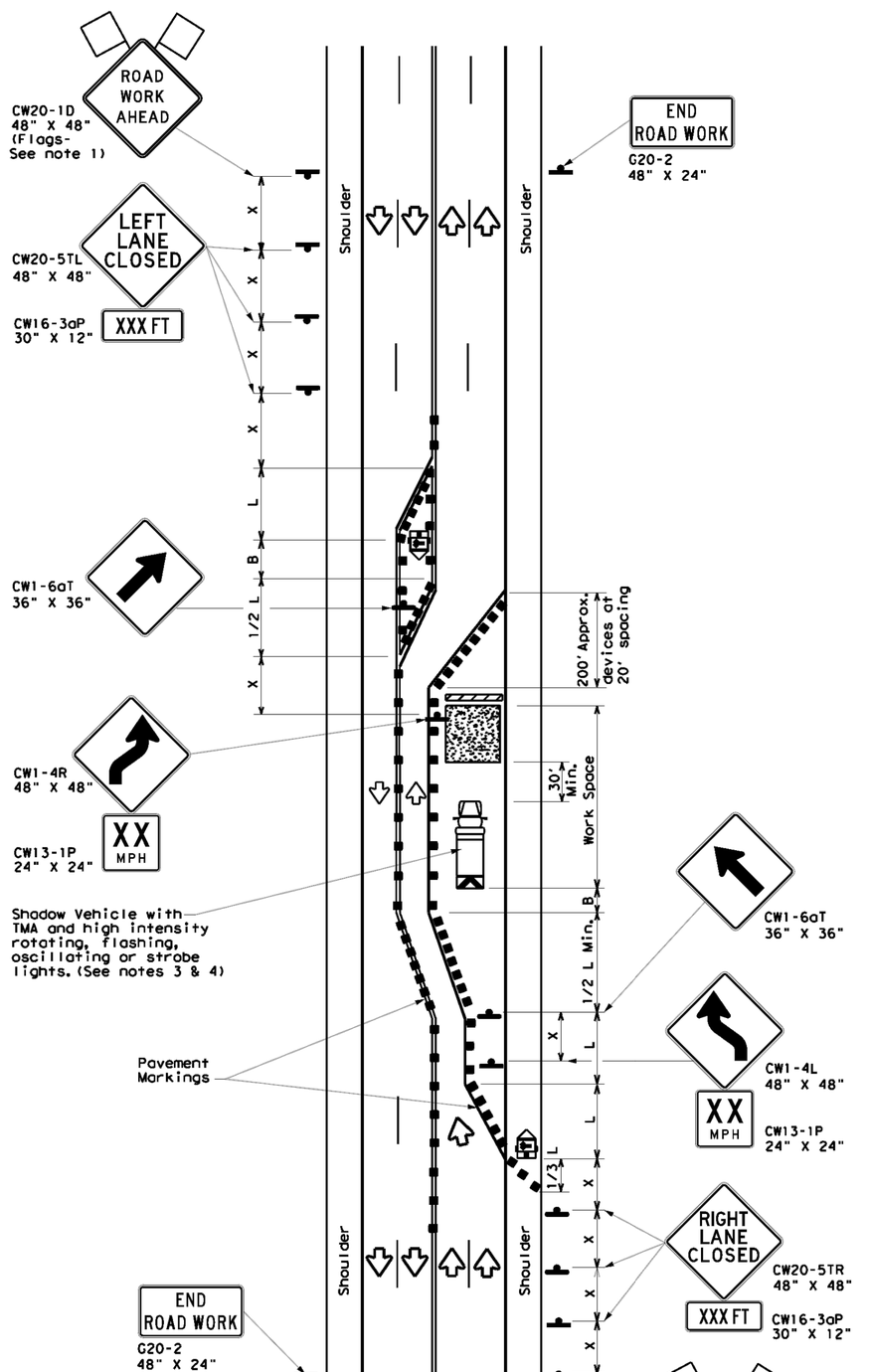

TCP (2-5b)

TWO LANES CLOSED

LEGEND			
	Type 3 Barricade		Channelizing Devices
	Heavy Work Vehicle		Truck Mounted Attenuator (TMA)
	Trailer Mounted Flashing Arrow Board	M	Portable Changeable Message Sign (PCMS)
	Sign		Traffic Flow
	Flag		Flagger

Posted Speed *	Formula	Minimum Desirable Taper Lengths ** 10' Offset	11' Offset	12' Offset	Suggested Maximum Spacing of Channelizing Devices: On a Taper	On a Tangent	Minimum Sign Spacing "X" Distance	Suggested Longitudinal Buffer Space "B"
30	$L=\frac{WS^2}{60}$	150'	165'	180'	30'	60'	120'	90'
35		205'	225'	245'	35'	70'	160'	120'
40		265'	295'	320'	40'	80'	240'	155'
45	L=WS	450'	495'	540'	45'	90'	320'	195'
50		500'	550'	600'	50'	100'	400'	240'
55		550'	605'	660'	55'	110'	500'	295'
60		600'	660'	720'	60'	120'	600'	350'
65		650'	715'	780'	65'	130'	700'	410'
70		700'	770'	840'	70'	140'	800'	475'
75		750'	825'	900'	75'	150'	900'	540'

* Conventional Roads Only

** Taper lengths have been rounded off.
L=Length of Taper(FT) W=Width of Offset(FT) S=Posted Speed(MPH)

TYPICAL USAGE				
MOBILE	SHORT DURATION	SHORT TERM STATIONARY	INTERMEDIATE TERM STATIONARY	LONG TERM STATIONARY
			✓	✓

GENERAL NOTES

1. Flags attached to signs where shown, are REQUIRED.
2. All traffic control devices illustrated are REQUIRED, except those denoted with the triangle symbol may be omitted when stated elsewhere in the plans, or for routine maintenance work, when approved by the Engineer.
3. A Shadow Vehicle with a TMA should be used anytime it can be positioned 30 to 100 feet in advance of the area of crew exposure without adversely affecting the performance or quality of the work. If workers are no longer present but road or work conditions require the traffic control to remain in place, Type 3 Barricades or other channelizing devices may be substituted for the Shadow Vehicle and TMA.
4. Additional Shadow Vehicles with TMAs may be positioned in each closed lane, on the shoulder or off the paved surface, next to those shown in order to protect a wider work space.
5. The downstream taper is optional. When used, it should be 100 feet approximately per lane, with channelizing devices spaced at 20 feet.

TCP (2-5a)

6. If this TCP is used for a left lane closure, CW20-5TL "LEFT LANE CLOSED" signs shall be used and channelizing devices shall be placed on the centerline to protect the work space from opposing traffic, with the arrow board placed in the closed lane near the end of the merging taper.

TCP (2-5b)

7. Conflicting pavement markings shall be removed for long-term projects.

Texas Department of Transportation

Traffic Operations Division Standard

TRAFFIC CONTROL PLAN LONG TERM LANE CLOSURES MULTILANE CONVENTIONAL RDS.

TCP(2-5)-18

FILE: tcp2-5-18.dgn	DN:	CK:	DW:	CK:
© TxDOT December 1985	CONT	SECT	JOB	HIGHWAY
REVISIONS 8-95 2-12 / 1-97 3-03 / 4-98 2-18	DIST	COUNTY		SHEET NO. 41

DATE:
FILE:

DISCLAIMER:
The use of this standard is governed by the "Texas Engineering Practice Act". No warranty of any kind is made by TxDOT for any purpose whatsoever. TxDOT assumes no responsibility for the conversion of this standard to other formats or for incorrect results or damages resulting from its use.

DATE:
FILE:

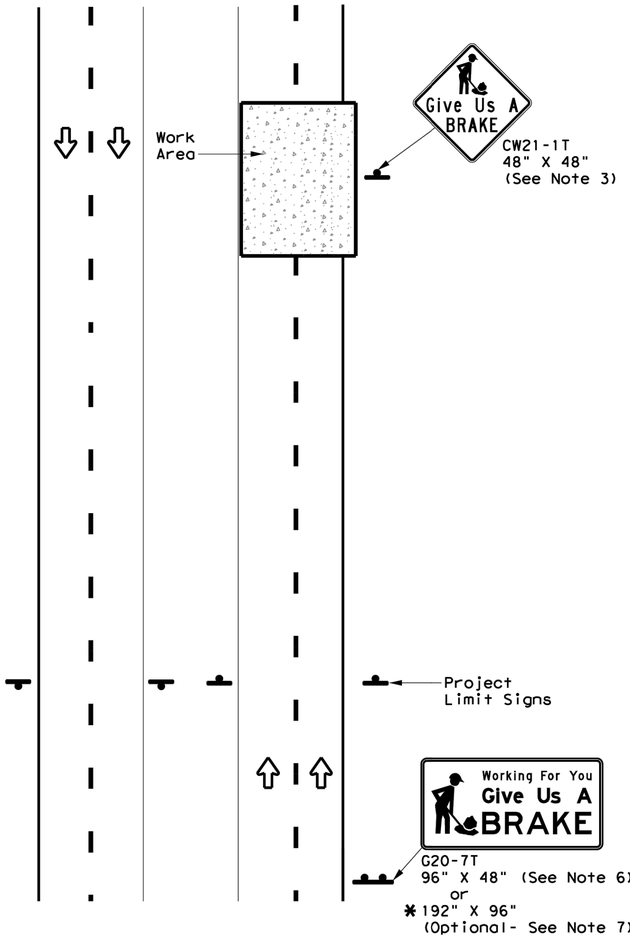

DIVIDED HIGHWAY

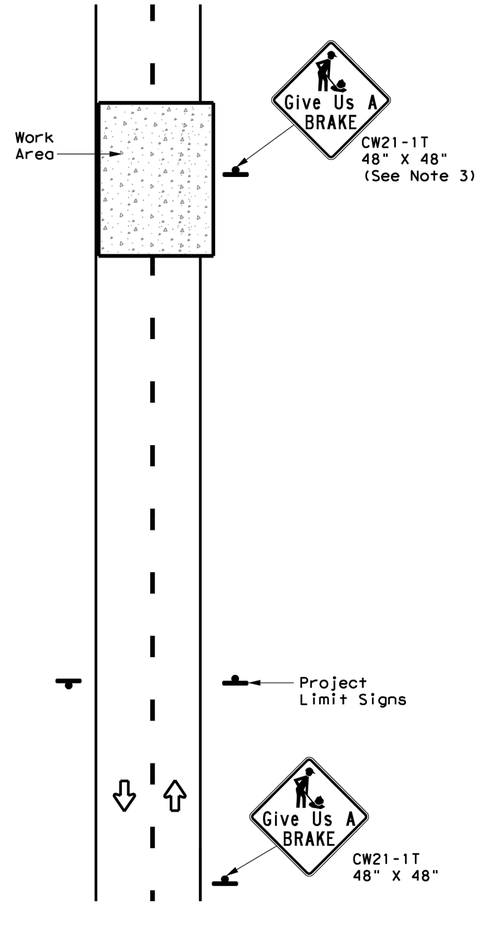

UNDIVIDED HIGHWAY

SIGNS ARE SHOWN FOR ONE DIRECTION OF TRAVEL

* When the optional larger WORKING FOR YOU GIVE US A BRAKE (G20-7T) 192" x 96" sign is required, the locations shall be noted elsewhere in the plans.

SUMMARY OF LARGE SIGNS

BACKGROUND COLOR	SIGN DESIGNATION	SIGN	SIGN DIMENSIONS	REFLECTIVE SHEETING	SQ FT	GALVANIZED STRUCTURAL STEEL			DRILLED SHAFT 24" DIA. (LF)
						Size	(LF) ①	(LF) ②	
Orange	G20-7T	Working For You Give Us A BRAKE	96" X 48"	Type B_{FL} or C_{FL}	32	▲	▲	▲	▲
Orange	G20-7T	Working For You Give Us A BRAKE	192" X 96"	Type B_{FL} or C_{FL}	128	W8x18	16	17	12

▲ See Note 6 Below

LEGEND	
	Sign
	Large Sign
	Traffic Flow

DEPARTMENTAL MATERIAL SPECIFICATIONS	
PLYWOOD SIGN BLANKS	DMS-7100
ALUMINUM SIGN BLANKS	DMS-7110
SIGN FACE MATERIALS	DMS-8300

COLOR	USAGE	SHEETING MATERIAL
ORANGE	BACKGROUND	TYPE B_{FL} OR TYPE C_{FL}
BLACK	LEGEND & BORDERS	NON-REFLECTIVE ACRYLIC FILM

GENERAL NOTES

1. See BC and SMD sheets for additional sign support details.
2. Sign locations shall be approved by the Engineer.
3. For projects more than two miles in length, Give Us a BRAKE signs should be repeated halfway through the project. The Give Us a Brake (CW21-1T) may be used for this purpose.
4. Work zone speed limits are sometimes used in conjunction with GIVE US A BRAKE signing. See BC(3) for location and spacing of construction speed zone signing when required.
5. Give Us a Brake (CW21-1T) signs and supports shall be considered subsidiary to Item 502, "Barricades, Signs and Traffic Handling."
6. The 96" X 48" Working For You Give Us A BRAKE (G20-7T) may use a 1/2" or 5/8" plywood substrate or 0.125" aluminum sheeting substrate and may be supported by two 4" x 6" wood posts with drilled holes for breakaway as per BC(5) and will be subsidiary to Item 502.
7. The Working For You Give Us A BRAKE (G20-7T) 192" X 96" sign shall be paid for under the following specification items:
   Item 636 - Aluminum Signs
   Item 647 - Large Roadside Sign Supports and Assemblies.
   Item 416 - Drilled Shaft Foundations
8. All signs shall be constructed in accordance with the details found in the "Standard Highway Sign Designs for Texas," latest edition. Sign details not shown in this manual shall be shown in the plans or the Engineer shall provide a detail to the Contractor before the sign is manufactured.

Texas Department of Transportation

Traffic Operations Division Standard

WORK ZONE "GIVE US A BRAKE" SIGNS

WZ(BRK)-13

FILE: wzbrk-13.dgn	DN: TxDOT	CK: TxDOT	DW: TxDOT	CK: TxDOT
©TxDOT August 1995	CONT	SECT	JOB	HIGHWAY
REVISIONS				
6-96 5-98 7-13	DIST	COUNTY		SHEET NO.
8-96 3-03				42

116

DISCLAIMER:
The use of this standard is governed by the "Texas Engineering Practice Act". No warranty of any kind is made by TxDOT for any purpose whatsoever. TxDOT assumes no responsibility for the conversion of this standard to other formats or for incorrect results or damages resulting from its use.

DATE:
FILE:

ROAD CLOSURE BEYOND THE INTERSECTION

SIGNING FOR A NUMBERED ROUTE WITH AN OFF-SITE DETOUR

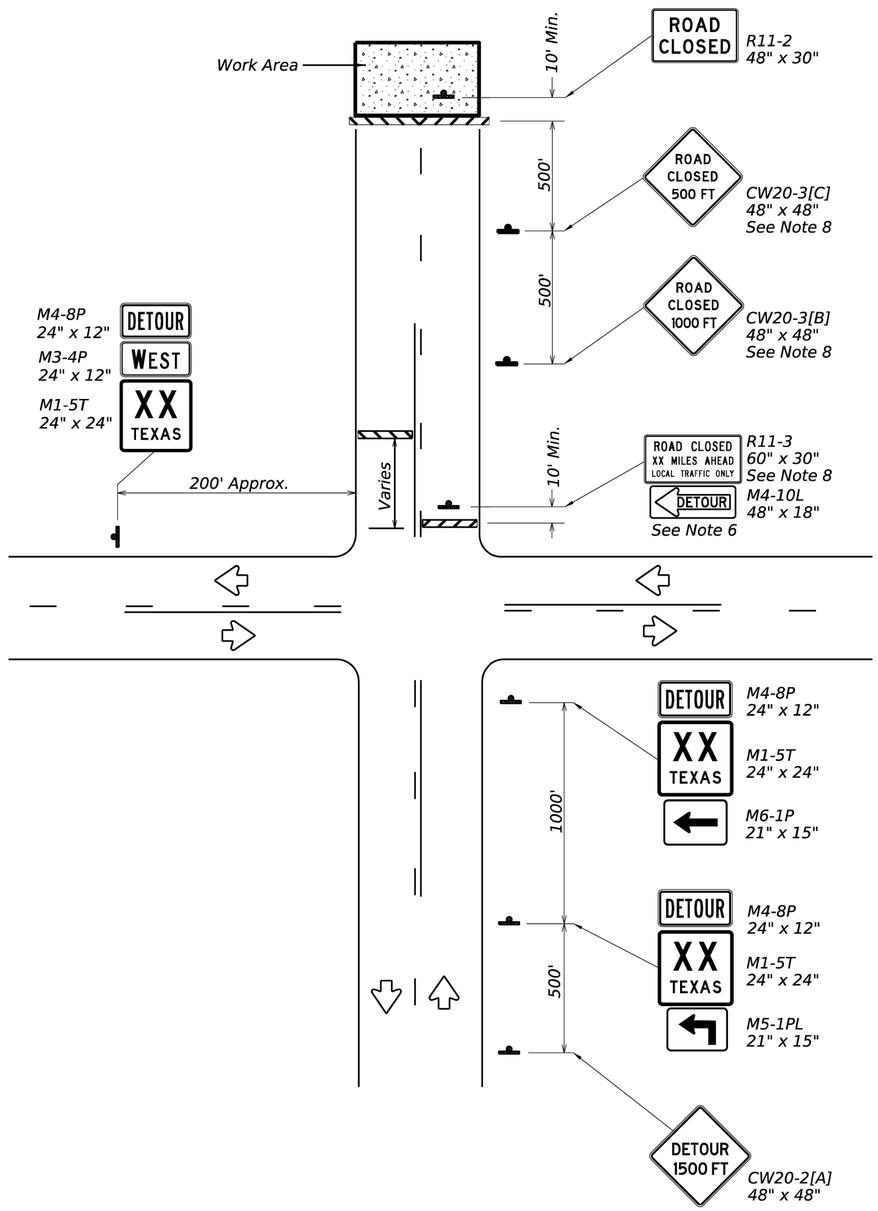

ROAD CLOSURE AT THE INTERSECTION

SIGNING FOR AN UN-NUMBERED ROUTE WITH AN OFF-SITE DETOUR

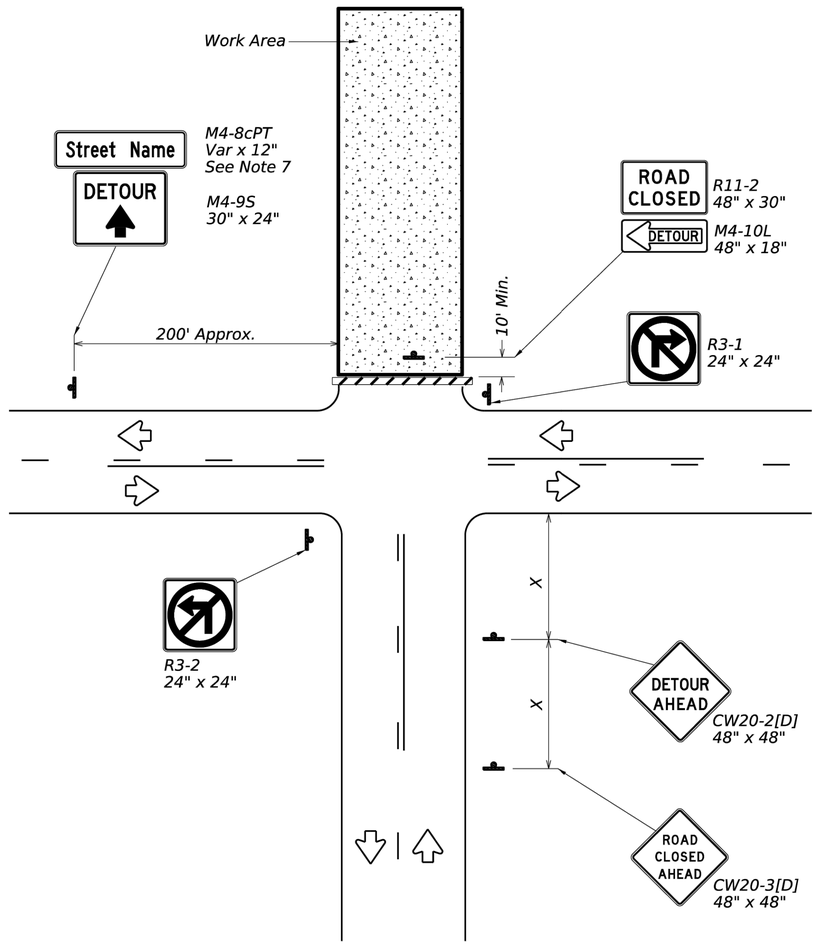

POSTED SPEED *	MINIMUM SIGN SPACING DISTANCE "X"
30	120'
35	160'
40	240'
45	320'
50	400'
55	500'[a]
60	600'[a]
65	700'[a]
70	800'[a]
75	900'[a]

LEGEND	
	Type 3 Barricade
	Sign

* Conventional roads only

a. Distance between signs should be increased as required to have 1500 feet of advance warning.

GENERAL NOTES:

1. This sheet is intended to provide details for temporary work zone road closures on conventional roadways. For permanent road closure details see the D&OM standard.
2. Barricades used must meet the requirements shown on Barricade and Construction Standard BC(10) and be listed on the Compliant Work Zone Traffic Control Devices list (CWZTCD).
3. Stockpiled materials must not be placed on the traffic side of barricades.
4. Barricades at the road closure should extend from pavement edge to pavement edge.
5. Detour signing shown is intended to illustrate the type of signing that is appropriate for numbered routes or un-numbered routes as labeled. It does not indicate the full extent of detour signing required. Detour routes should be signed as shown elsewhere in the plans.
6. If the road is open for a significant distance beyond the intersection or there are significant origin/destination points beyond the intersection, the signs and barricades at this location should be located at the edge of the traveled way.
7. The Street Name (M4-8cPT) plaque is placed above the DETOUR (M4-9S) sign.
8. For urban areas where there is a shorter distance between the intersection and the actual closure location, the ROAD CLOSED XX MILES AHEAD (R11-3) sign may be replaced with a ROAD CLOSED TO THRU TRAFFIC (R11-4) sign. If adequate space does not exist between the intersection and the closure, a single ROAD CLOSED AHEAD (CW20-3[D]) sign spaced as per the table above may replace the ROAD CLOSED 1000 FT (CW20-3[B]) and ROAD CLOSED 500 FT (CW20-3[C]) signs.
9. Signs and barricades shown are subsidiary to Item 502. Required locations of these details are as shown elsewhere in the plans.

Texas Department of Transportation

Traffic Safety Division Standard

WORK ZONE ROAD CLOSURE DETAILS

WZ(RCD)-26

FILE: wzrcd-26.dgn	DN: TxDOT	CK:TxDOT	DW: TxDOT	CK:TxDOT
© TxDOT March 2026	CONT	SECT	JOB	HIGHWAY
REVISIONS				
1-97 3-03	DIST	COUNTY		SHEET NO.
2-98 7-13				43
4-98 3-26				

113

DISCLAIMER:
The use of this standard is governed by the "Texas Engineering Practice Act". No warranty of any kind is made by TxDOT for any purpose whatsoever. TxDOT assumes no responsibility for the conversion of this standard to other formats or for incorrect results or damages resulting from its use.

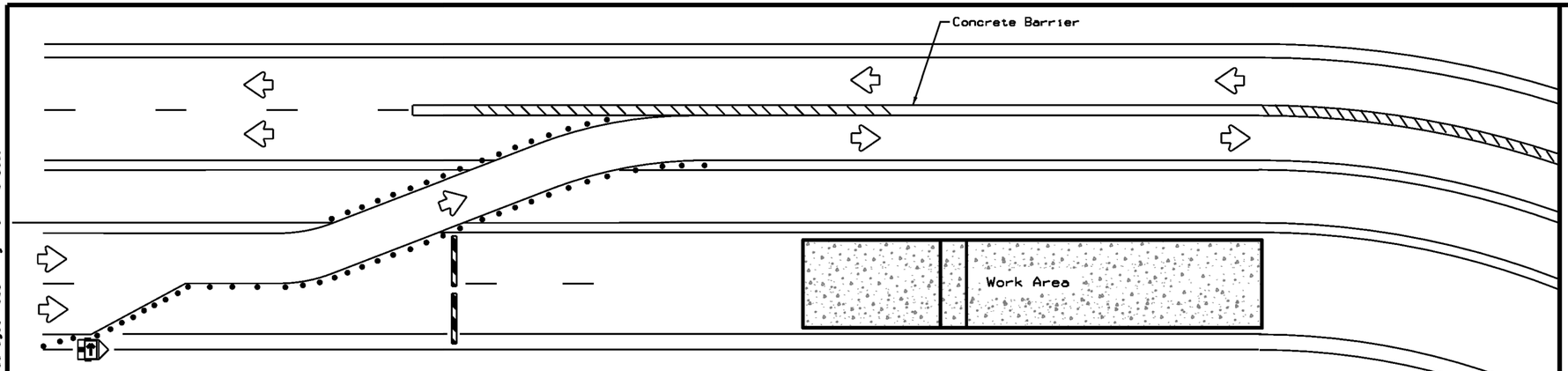

NOTES:

1. Length of Safety Glare screen will be specified elsewhere in the plans.
2. The cumulative nominal length of the modular safety glare screen units shall equal the length of the individual sections of temporary concrete traffic barrier on which they are installed so the joint between barrier sections will not be spanned by any one safety glare screen unit.
3. Screen Panel/blades will be designed such that reflective sheeting conforming with Departmental Material Specification DMS-8300, Sign Face Materials, Type B or C Yellow, minimum size of 2 inches by 12 inches can be attached to the edge of the panel/blade. The sheeting shall be attached to one glare screen panel/blade per section of concrete barrier not to exceed a spacing of 30 feet. Barrier reflectors are not necessary when panel/blades are installed with reflective sheeting as described.
4. Payment for these devices will be under statewide Special Specification "Modular Glare Screens for Headlight Barrier."
5. This detail is only intended to show types of locations where Glare Screens would be appropriate. Required signing and other devices shall be as shown elsewhere in the plans.

BARRIER DELINEATION WITH MODULAR GLARE SCREENS

LEGEND	
	Type 3 Barricade
• • •	Channelizing Devices
	Trailer Mounted Flashing Arrow Board
	Sign
\\\\	Safety glare screen

DEPARTMENTAL MATERIAL SPECIFICATIONS	
SIGN FACE MATERIALS	DMS-8300
DELINEATORS AND OBJECT MARKERS	DMS-8600
MODULAR GLARE SCREENS FOR HEADLIGHT BARRIER	DMS-8610

Only pre-qualified products shall be used. A copy of the Compliant Work Zone Traffic Control Devices List" CWZTCD)describes pre-qualified products and their sources and may be found at the following web address:

http://www.txdot.gov/business/resources/producer-list.html

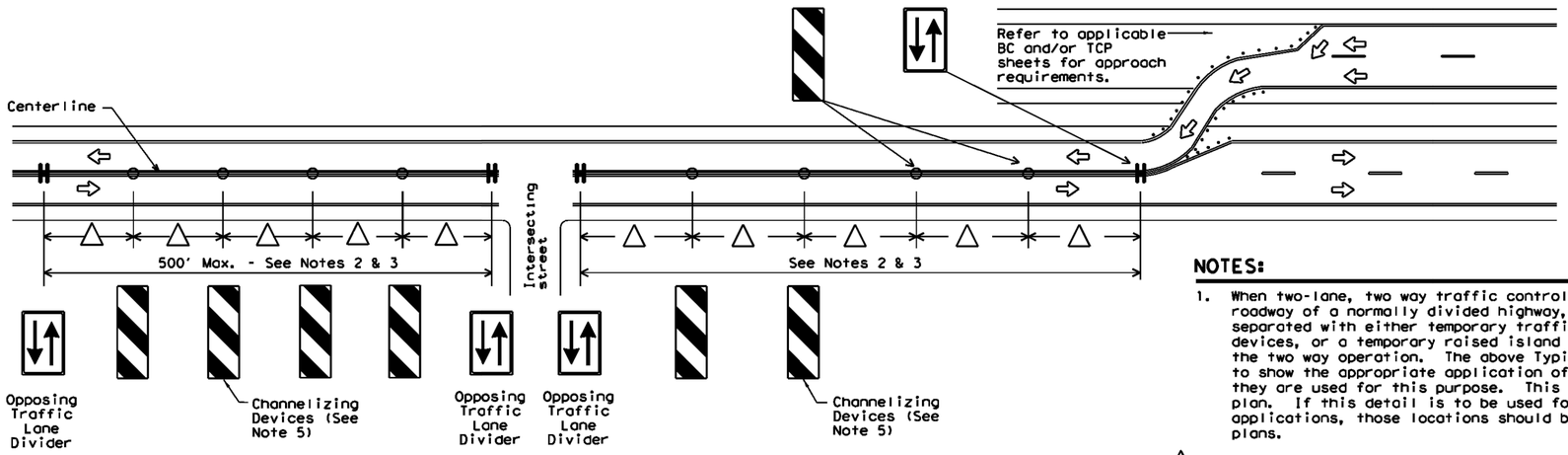

VERTICAL PANELS & OPPOSING TRAFFIC LANE DIVIDERS (OTLD) SEPARATING TWO-WAY TRAFFIC ON NORMALLY DIVIDED HIGHWAYS

NOTES:

1. When two-lane, two way traffic control must be maintained on one roadway of a normally divided highway, opposing traffic shall be separated with either temporary traffic barriers, channelizing devices, or a temporary raised island throughout the length of the two way operation. The above Typical Application is intended to show the appropriate application of channelizing devices when they are used for this purpose. This is not a traffic control plan. If this detail is to be used for other types of roads or applications, those locations should be stated elsewhere in the plans.
2. △ Space devices according to the Tangent Spacing shown on the Device Spacing table on BC(9) but not exceeding 100'.
3. Every fifth device should be an OTLD except when spaced closer to accommodate an intersection. An OTLD should be the first device on each side of intersecting streets or roads.
4. Locations where surface mount bases with adhesives or self-righting devices will be required in order to maintain them in their proper position should be noted elsewhere in the plans.
5. Channelizing devices are to be vertical panels, 42" cones or tubular markers that are at least 36" tall. Tubular markers used to separate traffic should have a rubber base weighing at least 30 pounds. Tubular markers that are 42" tall or more shall have four bands of reflective material as detailed for 42" cones on BC(10). Tubular markers less than 42" but at least 36" tall shall have three bands of 3" wide white reflective material spaced 2" apart. Reflective material shall meet DMS-8300, Type A.

Texas Department of Transportation | Traffic Operations Division Standard

TRAFFIC CONTROL PLAN TYPICAL DETAILS

WZ(TD)-17

FILE: wztd-17.dgn	DN: TxDOT	CK: TxDOT	DW: TxDOT	CK: TxDOT
©TxDOT February 1998	CONT	SECT	JOB	HIGHWAY
REVISIONS 2-17				
4-98	DIST	COUNTY		SHEET NO.
3-03				44
7-13				

DATE:
FILE:

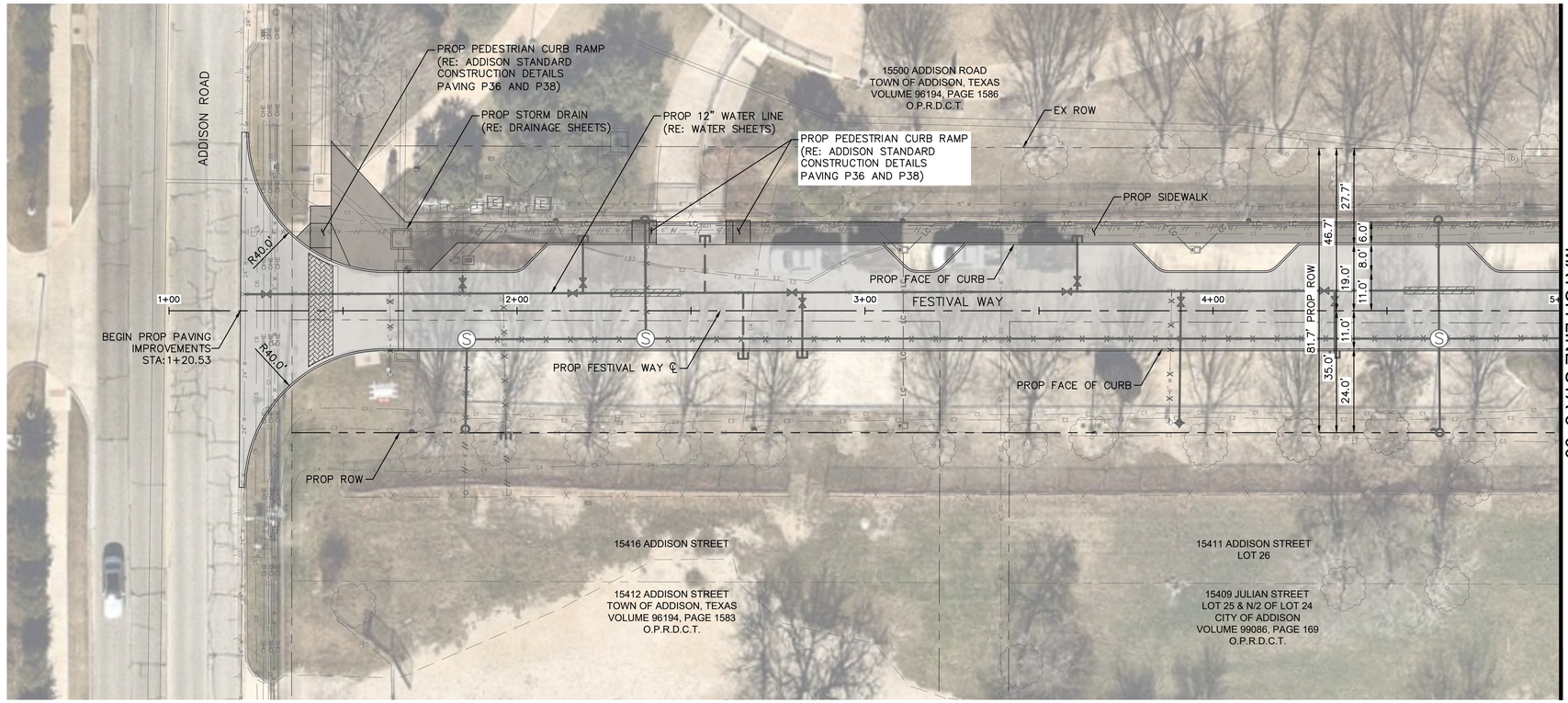

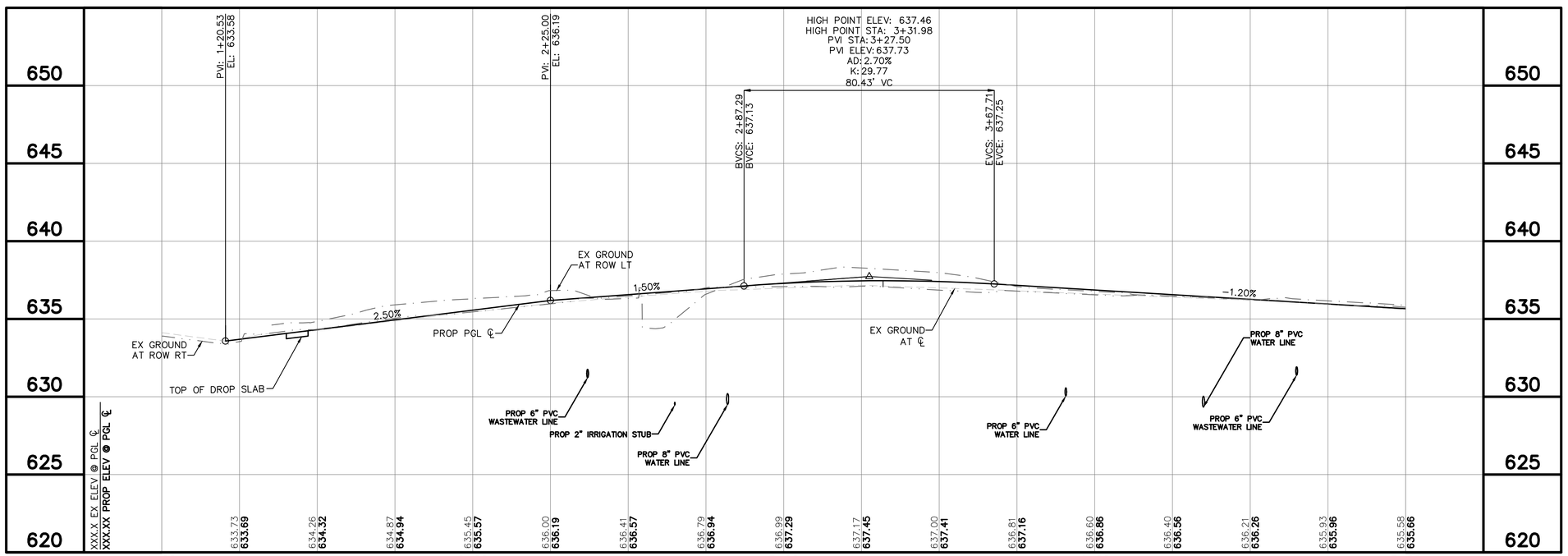



GRAPHIC SCALE IN FEET
0 10 20 40

LEGEND

- EX ROW
- PROP ROW
- EX EASEMENT
- PROP EASEMENT
- EX PROPERTY LINE
- PROP STORM DRAIN
- LC — PROP LIGHTING CONDUIT
- CNDT — PROP FIBER OPTIC CONDUIT
- E — PROP ELECTRIC LINE
- PROP PAVEMENT
- PROP DRIVEWAY
- PROP PAVERS
- PROP SIDEWALK
- FLOW ARROW
- EX TREE TO BE PROTECTED
- EX TREES TO BE REMOVED

NOTES

1. CONTRACTOR IS RESPONSIBLE FOR RELOCATION OF ANY SIGNS AND COORDINATION WITH THE TOWN ON ANY NECESSARY MODIFICATIONS.
2. CONTRACTOR IS RESPONSIBLE FOR CONFIRMING THE LOCATION OF ALL IRRIGATION FACILITIES WITHIN LOC.
3. THE EXISTENCE AND LOCATIONS OF ALL UNDERGROUND UTILITIES SHOWN ON THE DRAWINGS WERE OBTAINED FROM AVAILABLE RECORDS AND ARE APPROXIMATE. NEITHER THE OWNER NOR THE ENGINEER ASSUMES ANY RESPONSIBILITY FOR UTILITIES NOT SHOWN OR NOT IN THE LOCATION SHOWN. THE CONTRACTOR SHALL DETERMINE THE DEPTH AND LOCATION OF EXISTING UNDERGROUND UTILITIES PRIOR TO EXCAVATION AND SHALL BE REQUIRED TO TAKE ANY PRECAUTIONARY MEASURES TO PROTECT ALL LINES SHOWN AND/ OR ANY OTHER UNDERGROUND UTILITIES NOT OF RECORD OR NOT SHOWN ON THE PLANS. CONTRACTOR SHALL BE RESPONSIBLE FOR CONTACTING ALL FRANCHISE AND CITY UTILITIES PRIOR TO CONSTRUCTION.
4. ELEV ARE TOP FACE OF CURB ELEVATIONS UNLESS OTHERWISE NOTED.
5. ALL TREES NOT TO BE REMOVED MUST BE PROTECTED.
6. CONTRACTOR MUST PROTECT ALL IRRIGATION FACILITIES NOT CALLED TO BE REMOVED.

EX	EXISTING
PROP	PROPOSED
STA	STATION
EL	ELEVATION
PI	POINT OF HORIZONTAL INFLECTION
PC	POINT OF HORIZONTAL CURVATURE
PT	POINT OF HORIZONTAL TANGENCY
PRC	POINT OF HORIZONTAL REVERSE CURVATURE
PVI	POINT OF VERTICAL INFLECTION
AD	ALGEBRAIC DIFFERENCE IN GRADES
VC	VERTICAL CURVE
BVCS/ EVCS	BEGIN/END VERTICAL CURVE STATION
BVCE/ EVCE	BEGIN/END VERTICAL CURVE ELEVATION
PGL	PROPOSED GRADE LINE AT TOP OF CURB
TCE	TEMPORARY CONSTRUCTION EASEMENT
TP	TOP OF PAVEMENT

811 Know what's below. Call before you dig.

No.	REVISIONS	DATE	BY

PROJECT NO. C00057/ BID NO. 27-31

Kimley»Horn
225 E. JOHN W. CARPENTER FREEWAY SUITE 1100
IRVING, TX 75062
PHONE: 214-369-2100
WWW.KIMLEY-HORN.COM
© 2026 KIMLEY-HORN AND ASSOCIATES, INC.
TEXAS REGISTERED ENGINEERING FIRM #F-928

11/06/2026
STATE OF TEXAS
L. NATHAN ANTE
96866
LICENSED PROFESSIONAL ENGINEER
L. Nathan Ante

KHA PROJECT 063543066			
DATE 11/06/2026	SCALE	AS SHOWN	DESIGNED BY KCH
			DRAWN BY ZMZ
			CHECKED BY FLS

ADDISON
ADDISON JUNCTION PUBLIC INFRASTRUCTURE IMPROVEMENTS

FESTIVAL WAY
PLAN & PROFILE
BEGIN TO STA 5+00

SHEET NUMBER
45

Plotted By: Zmantt Zoch - November 06, 2026 - 08:08:32pm C:\ACTIVACTDocs\Active Items\063543066-ADDISON JUNCTION PUBLIC\Project Files\CADD\PlanSheets\PAVING-FESTIVAL WAY.dwg
This document, together with the concepts and designs presented herein, as an instrument of service, is intended only for the specific purpose and client for which it was prepared. Reuse of and improper reliance on this document without written authorization and adaptation by Kimley-Horn and Associates, Inc. shall be without liability to Kimley-Horn and Associates, Inc.

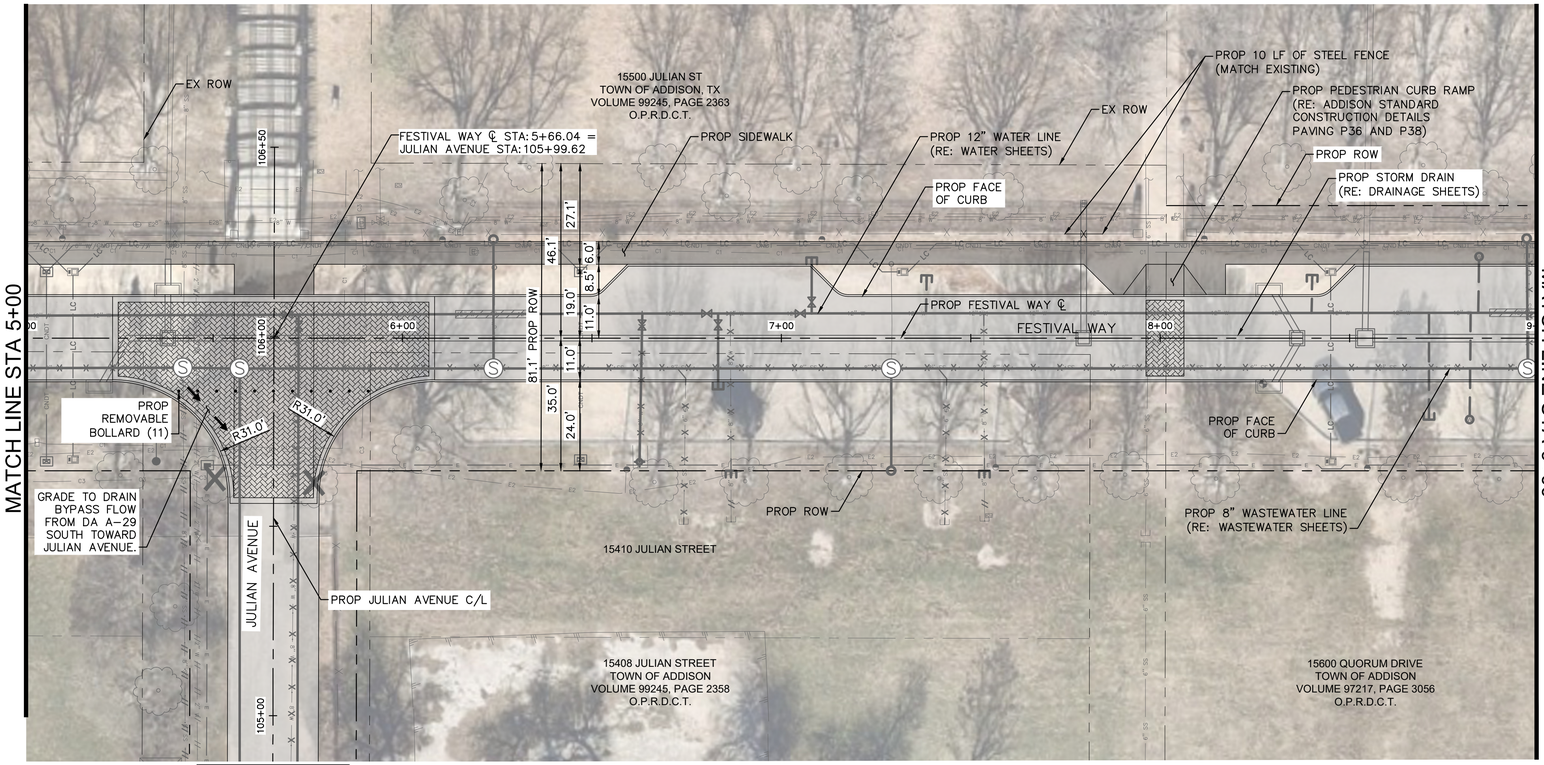

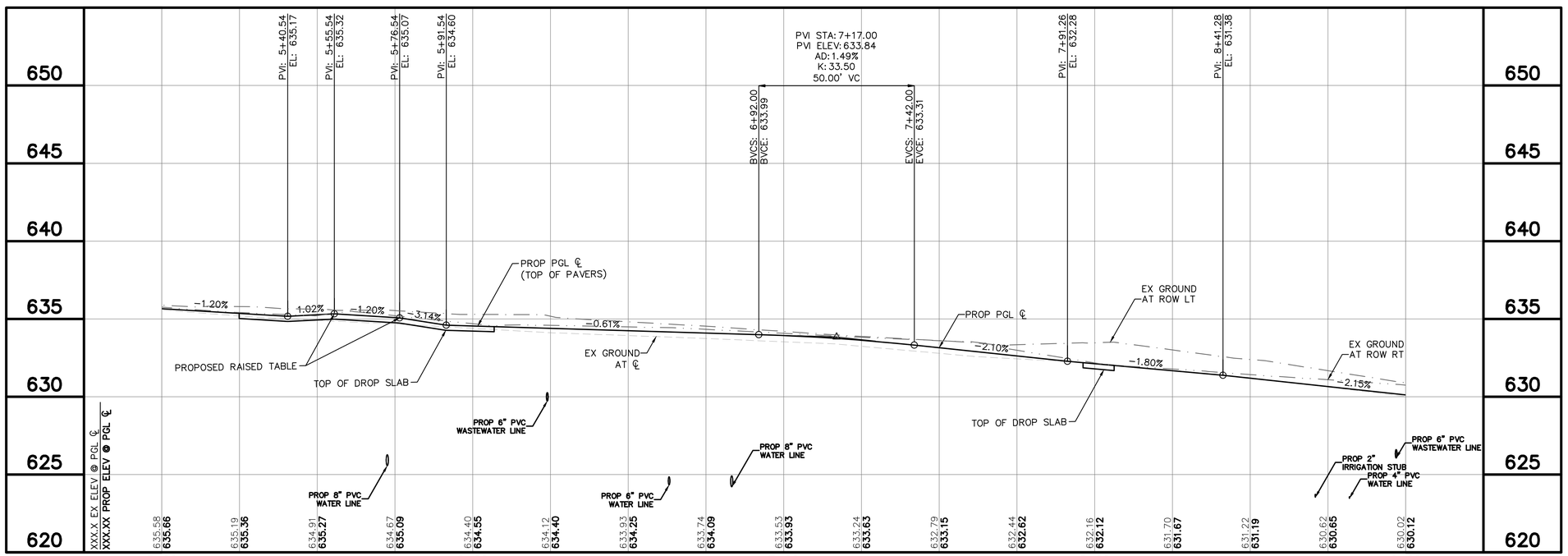



GRAPHIC SCALE IN FEET
0 10 20 40

LEGEND

- EX ROW
- PROP ROW
- EX EASEMENT
- PROP EASEMENT
- EX PROPERTY LINE
- PROP STORM DRAIN
- LC — PROP LIGHTING CONDUIT
- CNDT — PROP FIBER OPTIC CONDUIT
- E — PROP ELECTRIC LINE
- PROP PAVEMENT
- PROP DRIVEWAY
- PROP PAVERS
- PROP SIDEWALK
- FLOW ARROW
- EX TREE TO BE PROTECTED
- EX TREES TO BE REMOVED

NOTES

1. CONTRACTOR IS RESPONSIBLE FOR RELOCATION OF ANY SIGNS AND COORDINATION WITH THE TOWN ON ANY NECESSARY MODIFICATIONS.
2. CONTRACTOR IS RESPONSIBLE FOR CONFIRMING THE LOCATION OF ALL IRRIGATION FACILITIES WITHIN LOC.
3. THE EXISTENCE AND LOCATIONS OF ALL UNDERGROUND UTILITIES SHOWN ON THE DRAWINGS WERE OBTAINED FROM AVAILABLE RECORDS AND ARE APPROXIMATE. NEITHER THE OWNER NOR THE ENGINEER ASSUMES ANY RESPONSIBILITY FOR UTILITIES NOT SHOWN OR NOT IN THE LOCATION SHOWN. THE CONTRACTOR SHALL DETERMINE THE DEPTH AND LOCATION OF EXISTING UNDERGROUND UTILITIES PRIOR TO EXCAVATION AND SHALL BE REQUIRED TO TAKE ANY PRECAUTIONARY MEASURES TO PROTECT ALL LINES SHOWN AND/ OR ANY OTHER UNDERGROUND UTILITIES NOT OF RECORD OR NOT SHOWN ON THE PLANS. CONTRACTOR SHALL BE RESPONSIBLE FOR CONTACTING ALL FRANCHISE AND CITY UTILITIES PRIOR TO CONSTRUCTION.
4. ELEV ARE TOP FACE OF CURB ELEVATIONS UNLESS OTHERWISE NOTED.
5. ALL TREES NOT TO BE REMOVED MUST BE PROTECTED.
6. CONTRACTOR MUST PROTECT ALL IRRIGATION FACILITIES NOT CALLED TO BE REMOVED.

EX	EXISTING
PROP	PROPOSED
STA	STATION
EL	ELEVATION
PI	POINT OF HORIZONTAL INFLECTION
PC	POINT OF HORIZONTAL CURVATURE
PT	POINT OF HORIZONTAL TANGENCY
PRC	POINT OF HORIZONTAL REVERSE CURVATURE
PVI	POINT OF VERTICAL INFLECTION
AD	ALGEBRAIC DIFFERENCE IN GRADES
VC	VERTICAL CURVE
BVCS/ EVCS	BEGIN/END VERTICAL CURVE STATION
BVCE/ EVCE	BEGIN/END VERTICAL CURVE ELEVATION
PGL	PROPOSED GRADE LINE AT TOP OF CURB
TCE	TEMPORARY CONSTRUCTION EASEMENT
TP	TOP OF PAVEMENT

811 Know what's below. Call before you dig.

No.	REVISIONS	DATE	BY

PROJECT NO. C00057/ BID NO. 27-31

Kimley»Horn
225 E. JOHN W. CARPENTER FREEWAY SUITE 1100
IRVING, TX 75062
PHONE: 214-369-2600
WWW.KIMLEY-HORN.COM
© 2026 KIMLEY-HORN AND ASSOCIATES, INC.
TEXAS REGISTERED ENGINEERING FIRM #F-928

11/06/2026
STATE OF TEXAS
L. NATHAN ANTE
96866
LICENSED
PROFESSIONAL ENGINEER
L. Nathan Ante

KHA PROJECT 063543066			
DATE 11/06/2026	SCALE	AS SHOWN	DESIGNED BY KCH
			DRAWN BY ZMZ
			CHECKED BY FLS

ADDISON
ADDISON JUNCTION
PUBLIC
INFRASTRUCTURE
IMPROVEMENTS

FESTIVAL WAY
PLAN & PROFILE
STA 5+00 TO STA 9+00

SHEET NUMBER
46

Plotted By: Zmantt Zoch - November 09, 2026 08:08:41pm C:\ACCTwork\Kimley-Horn\063543066-ADDISON JUNCTION PUBLIC\Project Files\CADD\PlanSheets\PAVING-FESTIVAL WAY.dwg
This document, together with the concepts and designs presented herein, as an instrument of service, is intended only for the specific purpose and client for which it was prepared. Reuse of and improper reliance on this document without written authorization and adaptation by Kimley-Horn and Associates, Inc. shall be without liability to Kimley-Horn and Associates, Inc.

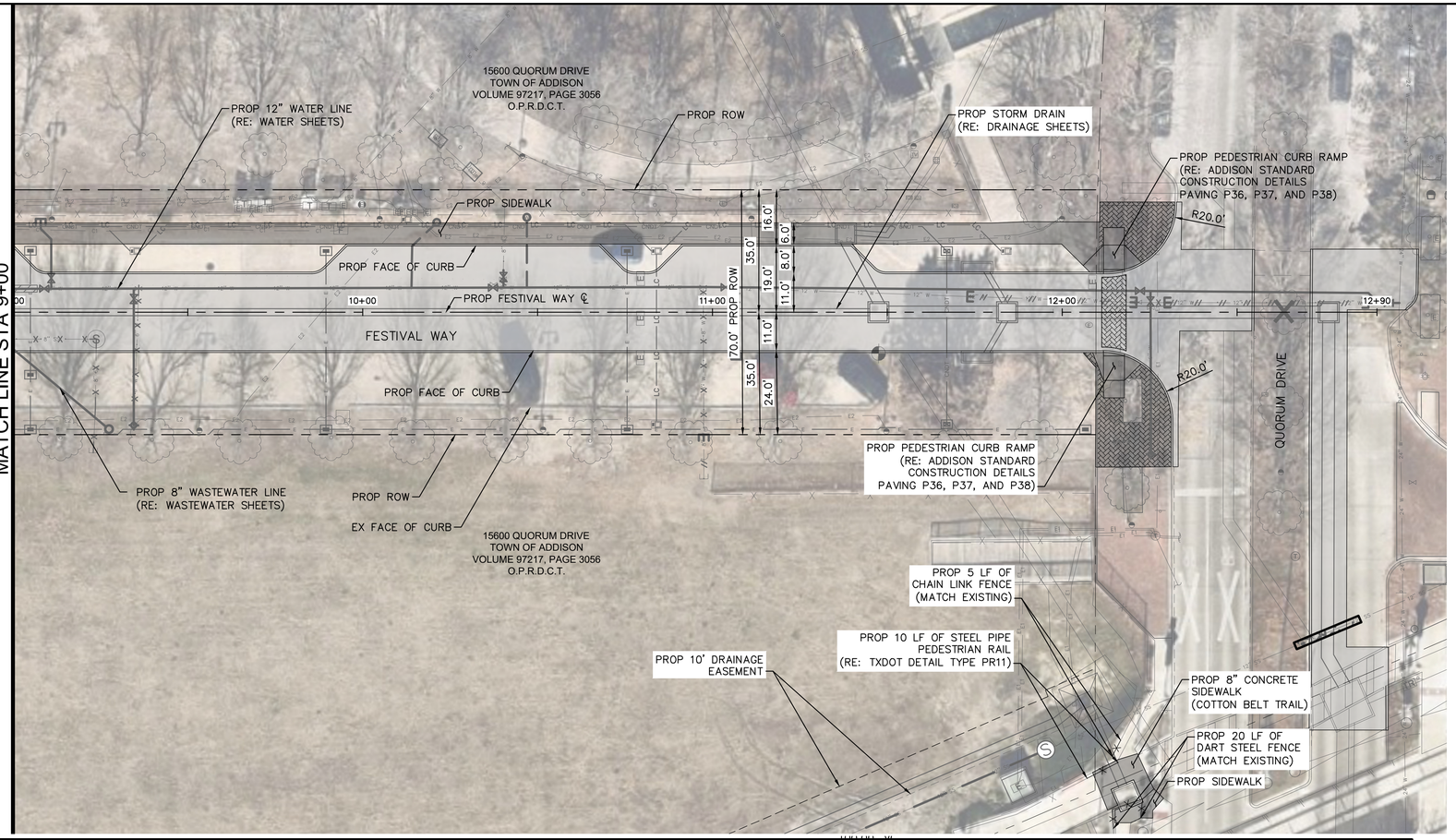

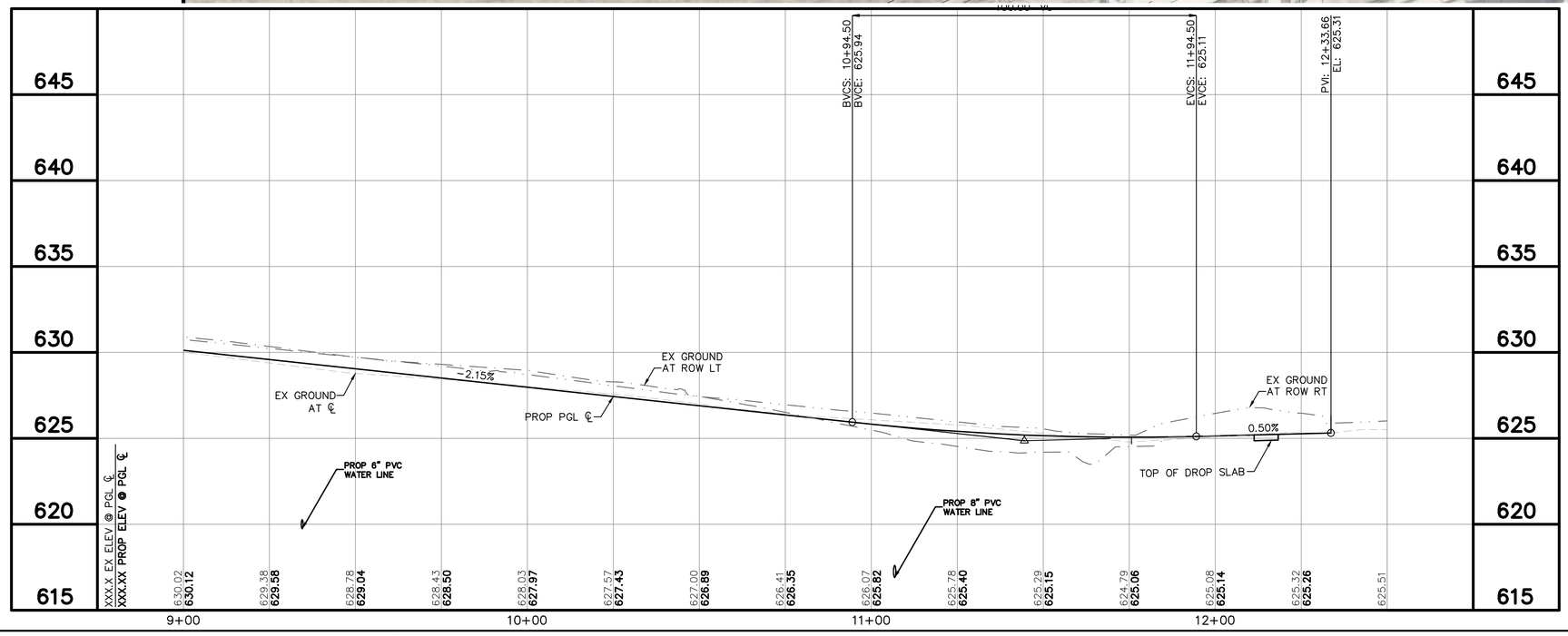



GRAPHIC SCALE IN FEET
0 10 20 40

LEGEND

- EX ROW
- PROP ROW
- EX EASEMENT
- PROP EASEMENT
- EX PROPERTY LINE
- PROP STORM DRAIN
- LC — PROP LIGHTING CONDUIT
- CNDT — PROP FIBER OPTIC CONDUIT
- E — PROP ELECTRIC LINE
- PROP PAVEMENT
- PROP DRIVEWAY
- PROP PAVERS
- PROP SIDEWALK
- FLOW ARROW
- EX TREE TO BE PROTECTED
- EX TREES TO BE REMOVED

NOTES

1. CONTRACTOR IS RESPONSIBLE FOR RELOCATION OF ANY SIGNS AND COORDINATION WITH THE TOWN ON ANY NECESSARY MODIFICATIONS.
2. CONTRACTOR IS RESPONSIBLE FOR CONFIRMING THE LOCATION OF ALL IRRIGATION FACILITIES WITHIN LOC.
3. THE EXISTENCE AND LOCATIONS OF ALL UNDERGROUND UTILITIES SHOWN ON THE DRAWINGS WERE OBTAINED FROM AVAILABLE RECORDS AND ARE APPROXIMATE. NEITHER THE OWNER NOR THE ENGINEER ASSUMES ANY RESPONSIBILITY FOR UTILITIES NOT SHOWN OR NOT IN THE LOCATION SHOWN. THE CONTRACTOR SHALL DETERMINE THE DEPTH AND LOCATION OF EXISTING UNDERGROUND UTILITIES PRIOR TO EXCAVATION AND SHALL BE REQUIRED TO TAKE ANY PRECAUTIONARY MEASURES TO PROTECT ALL LINES SHOWN AND/ OR ANY OTHER UNDERGROUND UTILITIES NOT OF RECORD OR NOT SHOWN ON THE PLANS. CONTRACTOR SHALL BE RESPONSIBLE FOR CONTACTING ALL FRANCHISE AND CITY UTILITIES PRIOR TO CONSTRUCTION.
4. ELEV ARE TOP FACE OF CURB ELEVATIONS UNLESS OTHERWISE NOTED.
5. ALL TREES NOT TO BE REMOVED MUST BE PROTECTED.
6. CONTRACTOR MUST PROTECT ALL IRRIGATION FACILITIES NOT CALLED TO BE REMOVED.

EX	EXISTING
PROP	PROPOSED
STA	STATION
EL	ELEVATION
PI	POINT OF HORIZONTAL INFLECTION
PC	POINT OF HORIZONTAL CURVATURE
PT	POINT OF HORIZONTAL TANGENCY
PRC	POINT OF HORIZONTAL REVERSE CURVATURE
PVI	POINT OF VERTICAL INFLECTION
AD	ALGEBRAIC DIFFERENCE IN GRADES
VC	VERTICAL CURVE
BVCS/ EVCS	BEGIN/END VERTICAL CURVE STATION
BVCE/ EVCE	BEGIN/END VERTICAL CURVE ELEVATION
PGL	PROPOSED GRADE LINE AT TOP OF CURB
TCE	TEMPORARY CONSTRUCTION EASEMENT
TP	TOP OF PAVEMENT

811 Know what's below. Call before you dig.

No.	REVISIONS	DATE	BY

PROJECT NO. C00057/ BID NO. 27-31

Kimley»Horn
225 E. JOHN W. CARPENTER FREEWAY SUITE 1100
IRVING, TX 75062
PHONE: 214.369.2300
WWW.KIMLEY-HORN.COM

© 2026 KIMLEY-HORN AND ASSOCIATES, INC.

TEXAS REGISTERED ENGINEERING FIRM #F-928

11/06/2026
STATE OF TEXAS
L. NATHAN ANTE
96866
LICENSED
PROFESSIONAL ENGINEER
L. Nathan Ante

KHA PROJECT 063543066
DATE 11/06/2026
SCALE AS SHOWN
DESIGNED BY KCH
DRAWN BY ZMZ
CHECKED BY FLS

ADDISON
ADDISON JUNCTION
PUBLIC
INFRASTRUCTURE
IMPROVEMENTS

FESTIVAL WAY
PLAN & PROFILE
STA 9+00 TO END

SHEET NUMBER
47

Plotted By: Zinnett, Zoeh, November 09, 2026, 08:08:48am C:\ACD\ACDProjects\Working Folder\063543066-ADDISON JUNCTION PUBLIC\Project Files\CAD\PlanSheets\FESTIVAL WAY.dwg
This electronic file, together with the concepts and designs presented herein, as an instrument of service, is intended only for the specific purpose and client for which it was prepared. Reuse of and improper reliance on this document without written authorization and adaptation by Kimley-Horn and Associates, Inc. shall be without liability to Kimley-Horn and Associates, Inc.

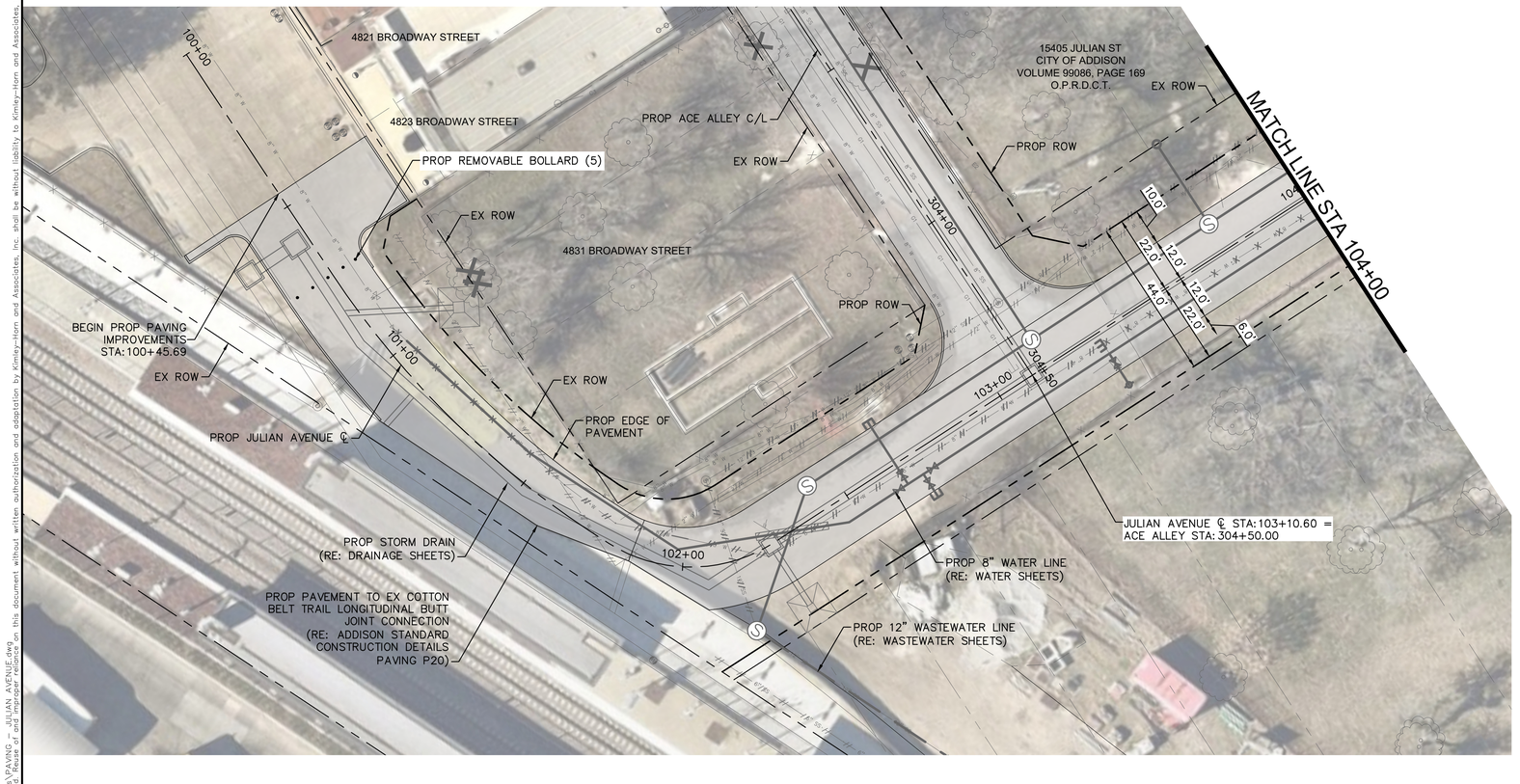

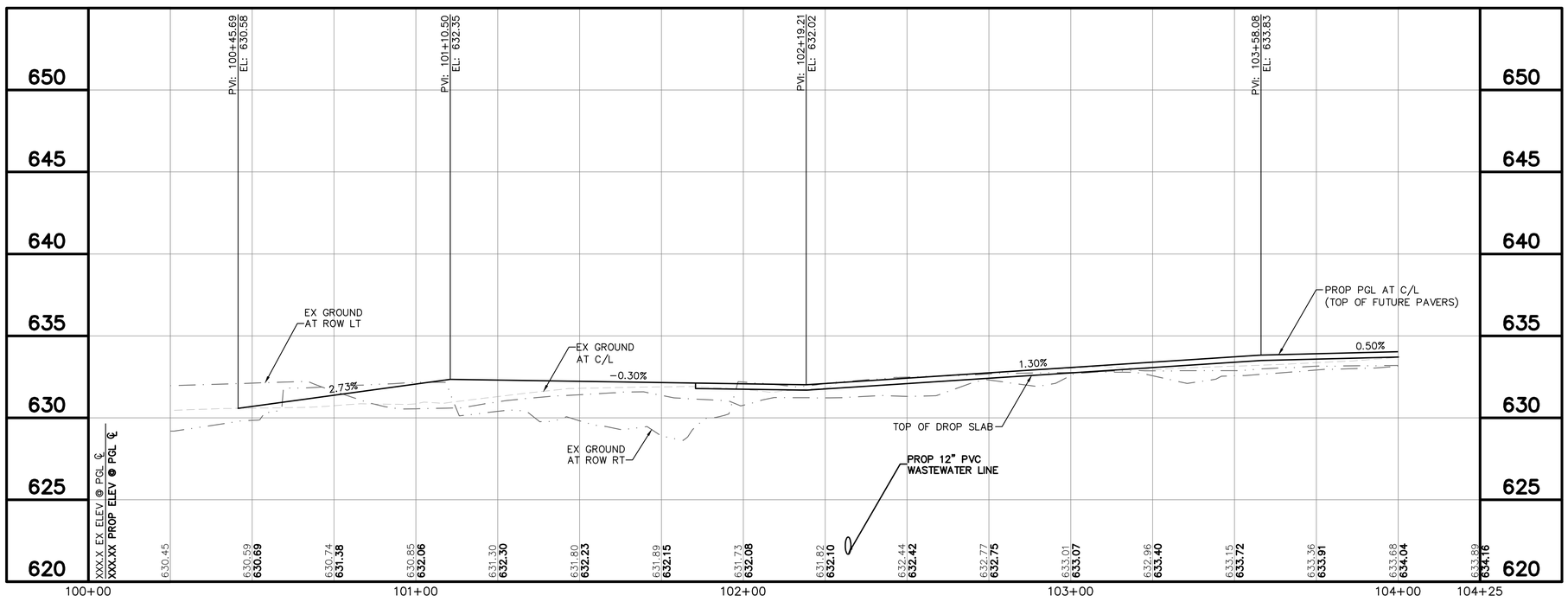



GRAPHIC SCALE IN FEET
0 10 20 40

LEGEND

- EX ROW
- PROP ROW
- EX EASEMENT
- PROP EASEMENT
- EX PROPERTY LINE
- PROP STORM DRAIN
- LC — PROP LIGHTING CONDUIT
- CNDT — PROP FIBER OPTIC CONDUIT
- E — PROP ELECTRIC LINE
- PROP PAVEMENT
- PROP DRIVEWAY
- PROP PAVERS
- PROP SIDEWALK
- FLOW ARROW
- EX TREE TO BE PROTECTED
- EX TREES TO BE REMOVED

NOTES

1. CONTRACTOR IS RESPONSIBLE FOR RELOCATION OF ANY SIGNS AND COORDINATION WITH THE TOWN ON ANY NECESSARY MODIFICATIONS.
2. CONTRACTOR IS RESPONSIBLE FOR CONFIRMING THE LOCATION OF ALL IRRIGATION FACILITIES WITHIN LOC.
3. THE EXISTENCE AND LOCATIONS OF ALL UNDERGROUND UTILITIES SHOWN ON THE DRAWINGS WERE OBTAINED FROM AVAILABLE RECORDS AND ARE APPROXIMATE. NEITHER THE OWNER NOR THE ENGINEER ASSUMES ANY RESPONSIBILITY FOR UTILITIES NOT SHOWN OR NOT IN THE LOCATION SHOWN. THE CONTRACTOR SHALL DETERMINE THE DEPTH AND LOCATION OF EXISTING UNDERGROUND UTILITIES PRIOR TO EXCAVATION AND SHALL BE REQUIRED TO TAKE ANY PRECAUTIONARY MEASURES TO PROTECT ALL LINES SHOWN AND/ OR ANY OTHER UNDERGROUND UTILITIES NOT OF RECORD OR NOT SHOWN ON THE PLANS. CONTRACTOR SHALL BE RESPONSIBLE FOR CONTACTING ALL FRANCHISE AND CITY UTILITIES PRIOR TO CONSTRUCTION.
4. ELEV ARE TOP FACE OF CURB ELEVATIONS UNLESS OTHERWISE NOTED.
5. ALL TREES NOT TO BE REMOVED MUST BE PROTECTED.
6. CONTRACTOR MUST PROTECT ALL IRRIGATION FACILITIES NOT CALLED TO BE REMOVED.

EX	EXISTING
PROP	PROPOSED
STA	STATION
EL	ELEVATION
PI	POINT OF HORIZONTAL INFLECTION
PC	POINT OF HORIZONTAL CURVATURE
PT	POINT OF HORIZONTAL TANGENCY
PRC	POINT OF HORIZONTAL REVERSE CURVATURE
PVI	POINT OF VERTICAL INFLECTION
AD	ALGEBRAIC DIFFERENCE IN GRADES
VC	VERTICAL CURVE
BVCS/ EVCS	BEGIN/END VERTICAL CURVE STATION
BVCE/ EVCE	BEGIN/END VERTICAL CURVE ELEVATION
PGL	PROPOSED GRADE LINE AT TOP OF CURB
TCE	TEMPORARY CONSTRUCTION EASEMENT
TP	TOP OF PAVEMENT

Know what's **below.**
Call before you dig.

No.	REVISIONS	DATE	BY

PROJECT NO. C00057/ BID NO. 27-31

Kimley»Horn
225 E. JOHN W. CARPENTER FREEWAY SUITE 1100
IRVING, TX 75062
PHONE: 214-565-0660
WWW.KIMLEY-HORN.COM

© 2026 KIMLEY-HORN AND ASSOCIATES, INC.
TEXAS REGISTERED ENGINEERING FIRM #F-928

11/06/2026

STATE OF TEXAS
L. NATHAN ANTE
96866
LICENSED PROFESSIONAL ENGINEER
L. Nathan Ante

KHA PROJECT 063543066			
DATE 11/06/2026	SCALE AS SHOWN	DESIGNED BY KCH	CHECKED BY FLS
		DRAWN BY ZMZ	

ADDISON
ADDISON JUNCTION PUBLIC INFRASTRUCTURE IMPROVEMENTS

JULIAN AVENUE
PLAN & PROFILE
BEGIN TO STA 104+00

SHEET NUMBER
48

Plotted By: Zmantt Zoch - November 06, 2026 - 01:55:56pm C:\ADCV\ACCDocs\Kimley-Horn\063543066-ADDISON JUNCTION PUBLIC\Project Files\CAD\PlanSheets\PAVING - JULIAN AVENUE.dwg
This document, together with the concepts and designs presented herein, as an instrument of service, is intended only for the specific purpose and client for which it was prepared. Reuse of and improper reliance on this document without written authorization and adaptation by Kimley-Horn and Associates, Inc. shall be without liability to Kimley-Horn and Associates, Inc.

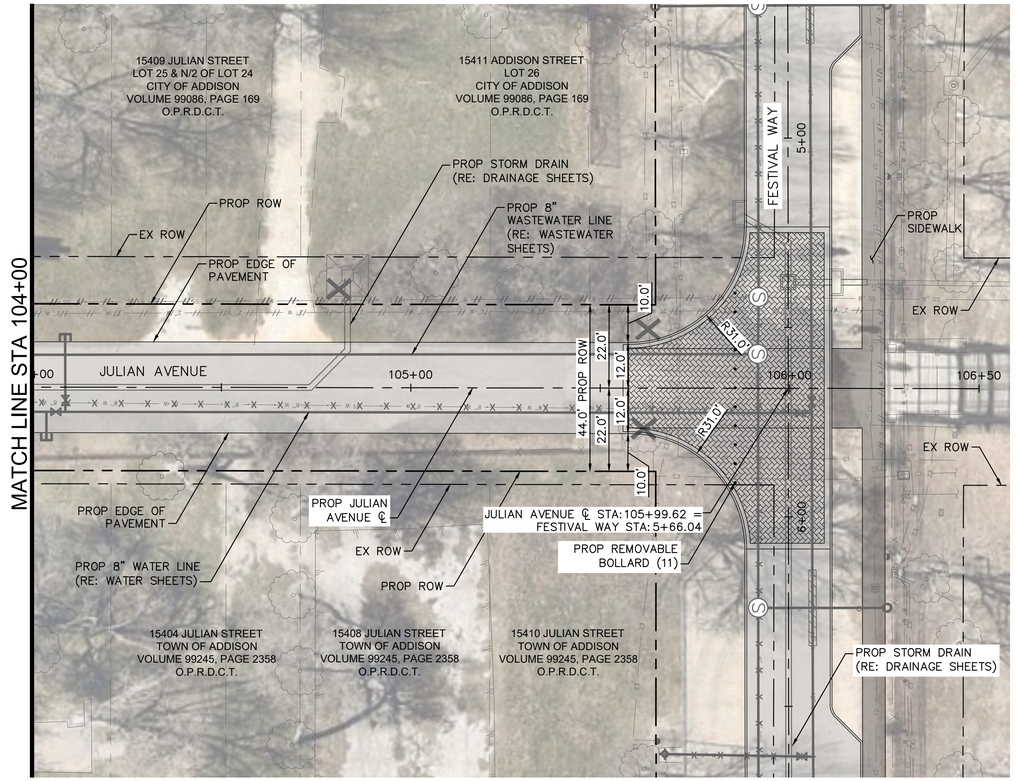

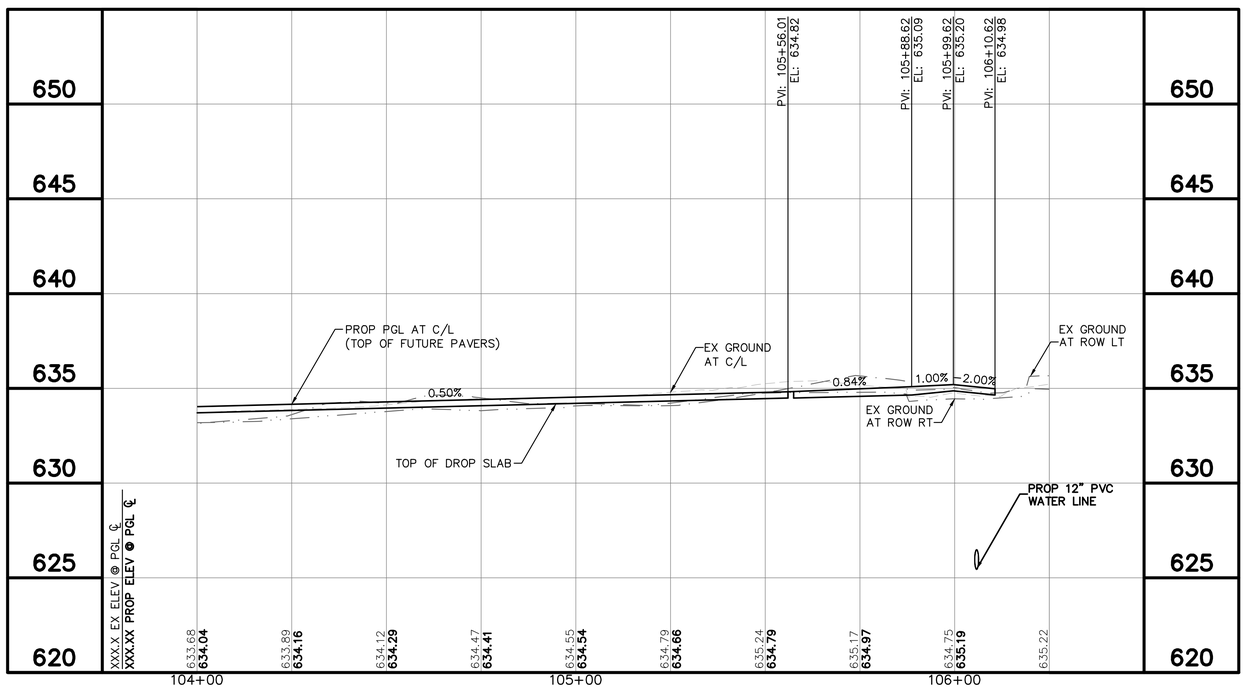

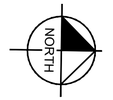

GRAPHIC SCALE IN FEET
0 10 20 40

LEGEND

- EX ROW
- PROP ROW
- EX EASEMENT
- PROP EASEMENT
- EX PROPERTY LINE
- PROP STORM DRAIN
- LC — PROP LIGHTING CONDUIT
- CNDT — PROP FIBER OPTIC CONDUIT
- E — PROP ELECTRIC LINE
- PROP PAVEMENT
- PROP DRIVEWAY
- PROP PAVERS
- PROP SIDEWALK
- FLOW ARROW
- EX TREE TO BE PROTECTED
- EX TREES TO BE REMOVED

NOTES

1. CONTRACTOR IS RESPONSIBLE FOR RELOCATION OF ANY SIGNS AND COORDINATION WITH THE TOWN ON ANY NECESSARY MODIFICATIONS.
2. CONTRACTOR IS RESPONSIBLE FOR CONFIRMING THE LOCATION OF ALL IRRIGATION FACILITIES WITHIN LOC.
3. THE EXISTENCE AND LOCATIONS OF ALL UNDERGROUND UTILITIES SHOWN ON THE DRAWINGS WERE OBTAINED FROM AVAILABLE RECORDS AND ARE APPROXIMATE. NEITHER THE OWNER NOR THE ENGINEER ASSUMES ANY RESPONSIBILITY FOR UTILITIES NOT SHOWN OR NOT IN THE LOCATION SHOWN. THE CONTRACTOR SHALL DETERMINE THE DEPTH AND LOCATION OF EXISTING UNDERGROUND UTILITIES PRIOR TO EXCAVATION AND SHALL BE REQUIRED TO TAKE ANY PRECAUTIONARY MEASURES TO PROTECT ALL LINES SHOWN AND/ OR ANY OTHER UNDERGROUND UTILITIES NOT OF RECORD OR NOT SHOWN ON THE PLANS. CONTRACTOR SHALL BE RESPONSIBLE FOR CONTACTING ALL FRANCHISE AND CITY UTILITIES PRIOR TO CONSTRUCTION.
4. ELEV ARE TOP FACE OF CURB ELEVATIONS UNLESS OTHERWISE NOTED.
5. ALL TREES NOT TO BE REMOVED MUST BE PROTECTED.
6. CONTRACTOR MUST PROTECT ALL IRRIGATION FACILITIES NOT CALLED TO BE REMOVED.

EX	EXISTING
PROP	PROPOSED
STA	STATION
EL	ELEVATION
PI	POINT OF HORIZONTAL INFLECTION
PC	POINT OF HORIZONTAL CURVATURE
PT	POINT OF HORIZONTAL TANGENCY
PRC	POINT OF HORIZONTAL REVERSE CURVATURE
PVI	POINT OF VERTICAL INFLECTION
AD	ALGEBRAIC DIFFERENCE IN GRADES
VC	VERTICAL CURVE
BVCS/ EVCS	BEGIN/END VERTICAL CURVE STATION
BVCE/ EVCE	BEGIN/END VERTICAL CURVE ELEVATION
PGL	PROPOSED GRADE LINE AT TOP OF CURB
TCE	TEMPORARY CONSTRUCTION EASEMENT
TP	TOP OF PAVEMENT

Know what's **below.**
Call before you dig.

No.	REVISIONS	DATE	BY

PROJECT NO. C00057/ BID NO. 27-31

Kimley»Horn
225 E. JOHN W. CARPENTER FREEWAY SUITE 1100
IRVING, TX 75062
PHONE: 214-369-6500
WWW.KIMLEY-HORN.COM
© 2026 KIMLEY-HORN AND ASSOCIATES, INC.
TEXAS REGISTERED ENGINEERING FIRM #F-928

11/06/2026
STATE OF TEXAS
L. NATHAN ANTE
96866
LICENSED
PROFESSIONAL ENGINEER
L. Nathan Ante

KHA PROJECT 063543066			
DATE 11/06/2026	SCALE	AS SHOWN	DESIGNED BY KCH
			DRAWN BY ZMZ
			CHECKED BY FLS

ADDISON
ADDISON JUNCTION
PUBLIC
INFRASTRUCTURE
IMPROVEMENTS

JULIAN AVENUE
PLAN & PROFILE
STA 104+00 TO END

SHEET NUMBER
49

Plotted By: Zmantl Zach - Wednesday, November 05, 2026 - 01:56:03pm - C:\KHA\ADDISON JUNCTION PUBLIC\Project Files\CADD\PlanSheets\PAVING - JULIAN AVENUE.dwg
This document, together with the concepts and designs presented herein, as an instrument of service, is intended only for the specific purpose and client for which it was prepared. Reuse of and improper reliance on this document without written authorization and adaptation by Kimley-Horn and Associates, Inc. shall be without liability to Kimley-Horn and Associates, Inc.

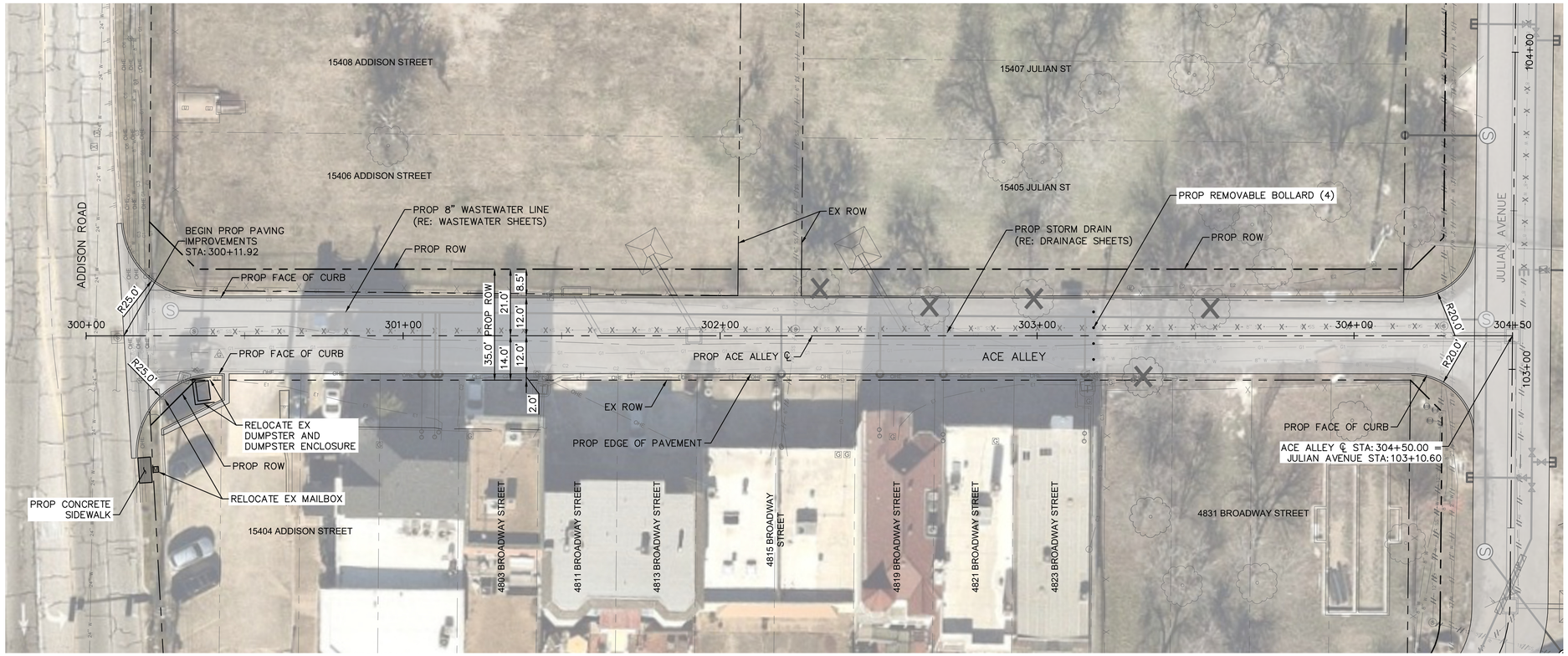

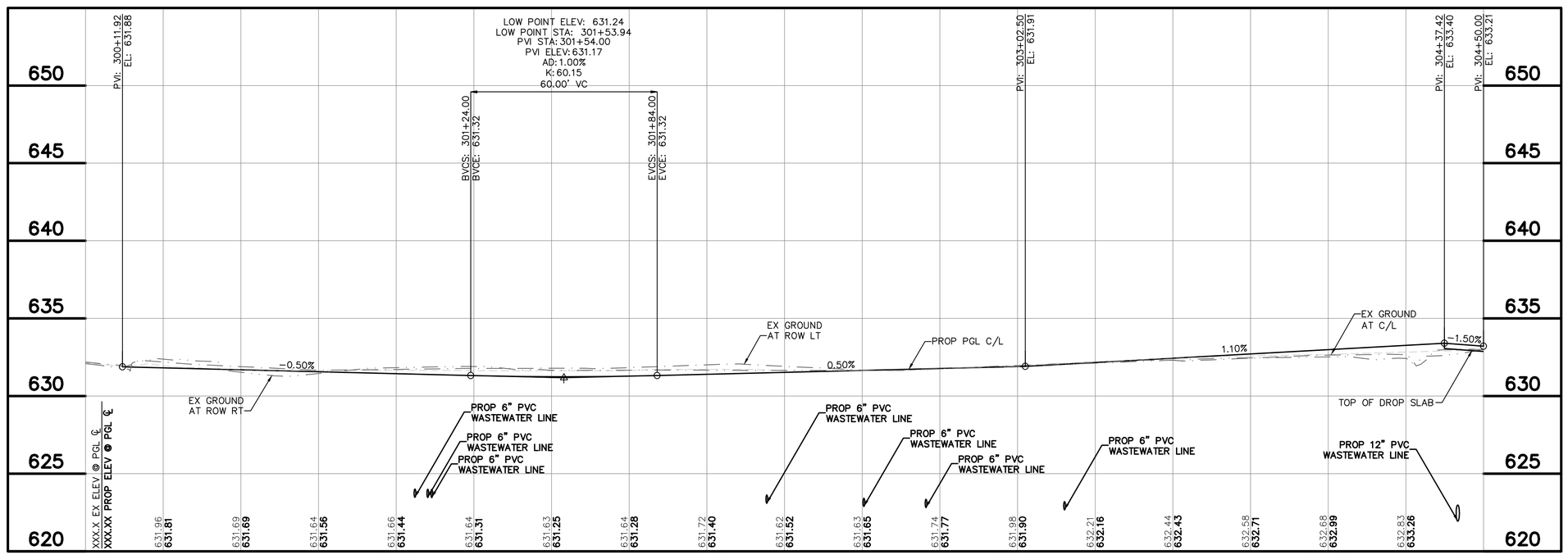

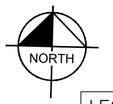

GRAPHIC SCALE IN FEET
0 10 20 40

LEGEND

- EX ROW
- PROP ROW
- EX EASEMENT
- PROP EASEMENT
- EX PROPERTY LINE
- PROP STORM DRAIN
- LC — PROP LIGHTING CONDUIT
- CNDT — PROP FIBER OPTIC CONDUIT
- E — PROP ELECTRIC LINE
- PROP PAVEMENT
- PROP DRIVEWAY
- PROP PAVERS
- PROP SIDEWALK
- FLOW ARROW
- EX TREE TO BE PROTECTED
- EX TREES TO BE REMOVED

NOTES

1. CONTRACTOR IS RESPONSIBLE FOR RELOCATION OF ANY SIGNS AND COORDINATION WITH THE TOWN ON ANY NECESSARY MODIFICATIONS.
2. CONTRACTOR IS RESPONSIBLE FOR CONFIRMING THE LOCATION OF ALL IRRIGATION FACILITIES WITHIN LOC.
3. THE EXISTENCE AND LOCATIONS OF ALL UNDERGROUND UTILITIES SHOWN ON THE DRAWINGS WERE OBTAINED FROM AVAILABLE RECORDS AND ARE APPROXIMATE. NEITHER THE OWNER NOR THE ENGINEER ASSUMES ANY RESPONSIBILITY FOR UTILITIES NOT SHOWN OR NOT IN THE LOCATION SHOWN. THE CONTRACTOR SHALL DETERMINE THE DEPTH AND LOCATION OF EXISTING UNDERGROUND UTILITIES PRIOR TO EXCAVATION AND SHALL BE REQUIRED TO TAKE ANY PRECAUTIONARY MEASURES TO PROTECT ALL LINES SHOWN AND/ OR ANY OTHER UNDERGROUND UTILITIES NOT OF RECORD OR NOT SHOWN ON THE PLANS. CONTRACTOR SHALL BE RESPONSIBLE FOR CONTACTING ALL FRANCHISE AND CITY UTILITIES PRIOR TO CONSTRUCTION.
4. ELEV ARE TOP FACE OF CURB ELEVATIONS UNLESS OTHERWISE NOTED.
5. ALL TREES NOT TO BE REMOVED MUST BE PROTECTED.
6. CONTRACTOR MUST PROTECT ALL IRRIGATION FACILITIES NOT CALLED TO BE REMOVED.

EX	EXISTING
PROP	PROPOSED
STA	STATION
EL	ELEVATION
PI	POINT OF HORIZONTAL INFLECTION
PC	POINT OF HORIZONTAL CURVATURE
PT	POINT OF HORIZONTAL TANGENCY
PRC	POINT OF HORIZONTAL REVERSE CURVATURE
PVI	POINT OF VERTICAL INFLECTION
AD	ALGEBRAIC DIFFERENCE IN GRADES
VC	VERTICAL CURVE
BVCS/ EVCS	BEGIN/END VERTICAL CURVE STATION
BVCE/ EVCE	BEGIN/END VERTICAL CURVE ELEVATION
PGL	PROPOSED GRADE LINE AT TOP OF CURB
TCE	TEMPORARY CONSTRUCTION EASEMENT
TP	TOP OF PAVEMENT

811 Know what's below. Call before you dig.

No.	REVISIONS	DATE	BY

PROJECT NO. C00057/ BID NO. 27-31

Kimley»Horn
225 E. JOHN W. CARPENTER FREEWAY SUITE 1100
IRVING, TX 75062
PHONE: 214-369-2300
WWW.KIMLEY-HORN.COM
© 2026 KIMLEY-HORN AND ASSOCIATES, INC.
TEXAS REGISTERED ENGINEERING FIRM #F-928

11/06/2026
STATE OF TEXAS
L. NATHAN ANTE
96866
LICENSED PROFESSIONAL ENGINEER
L. Nathan Ante

KHA PROJECT	063543066
DATE	11/06/2026
SCALE	AS SHOWN
DESIGNED BY	KCH
DRAWN BY	ZMZ
CHECKED BY	FLS

ADDISON
ADDISON JUNCTION PUBLIC INFRASTRUCTURE IMPROVEMENTS

ACE ALLEY
PLAN & PROFILE
BEGIN TO END

SHEET NUMBER
50

Plotted By: Zoe Zmuda, November 06, 2026 - 01:56:13pm C:\ACT\ACCTDocs\Winter Haven\285443066-ADDISON JUNCTION PUBLIC\Project Files\CADD\PlanSheets\PAVING - ACE ALLEY.dwg
This document, together with the concepts and designs presented herein, as an instrument of service, is intended only for the specific purpose and client for which it was prepared. Reuse of and improper reliance on this document without written authorization and adaptation by Kimley-Horn and Associates, Inc. shall be without liability to Kimley-Horn and Associates, Inc.

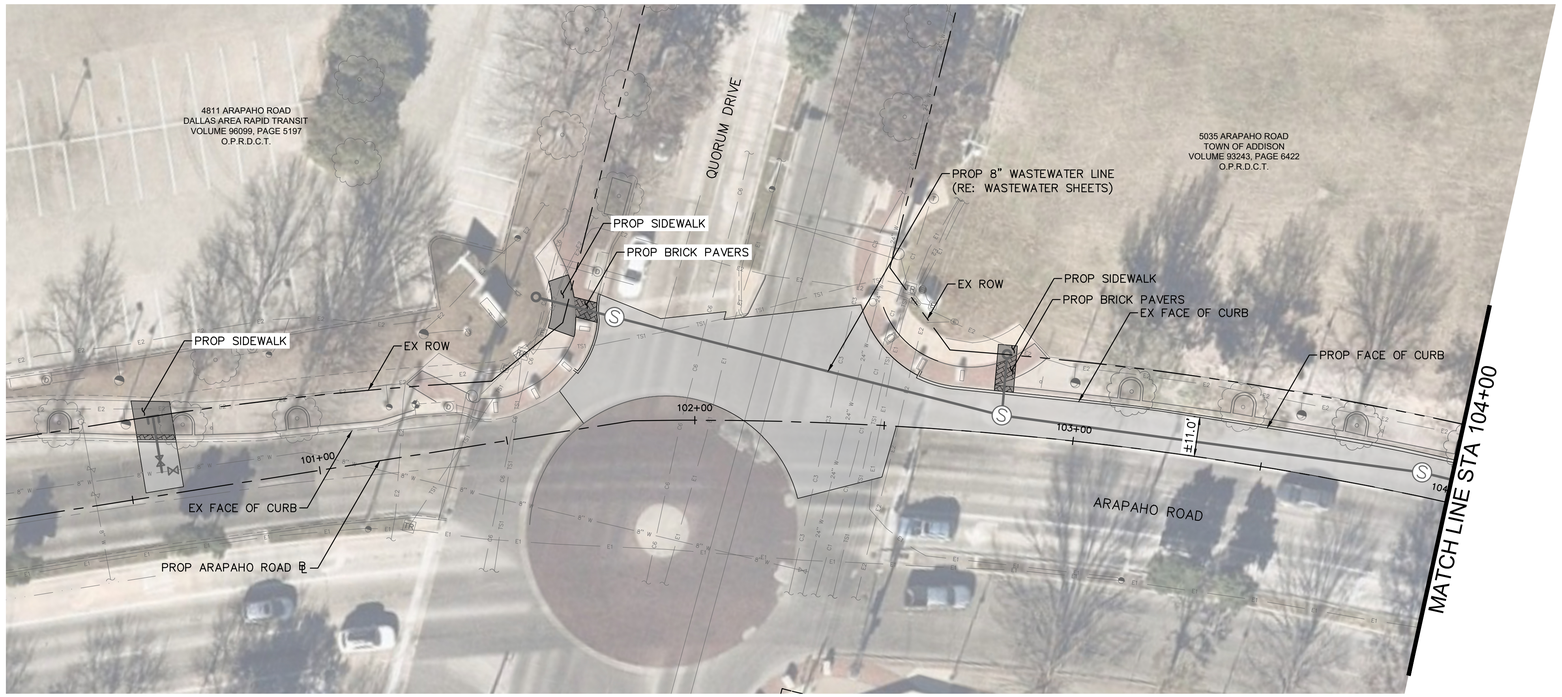

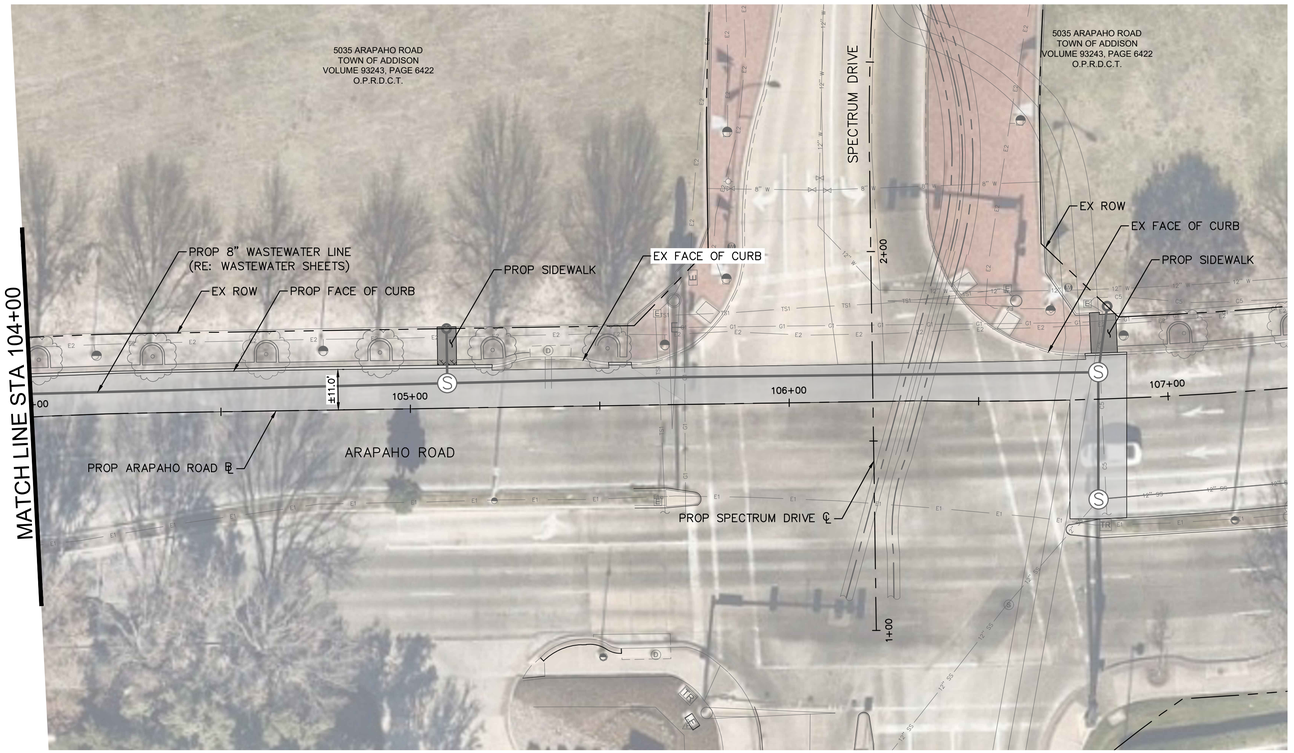



NORTH

GRAPHIC SCALE IN FEET
0 ## ## ##

LEGEND

- EX ROW
- PROP ROW
- EX EASEMENT
- PROP EASEMENT
- EX PROPERTY LINE
- PROP STORM DRAIN
- LC — PROP LIGHTING CONDUIT
- CNDT — PROP FIBER OPTIC CONDUIT
- E — PROP ELECTRIC LINE
- PROP PAVEMENT
- PROP DRIVEWAY
- PROP PAVERS
- PROP SIDEWALK
- FLOW ARROW
- EX TREE TO BE PROTECTED
- EX TREES TO BE REMOVED

NOTES

1. CONTRACTOR IS RESPONSIBLE FOR RELOCATION OF ANY SIGNS AND COORDINATION WITH THE TOWN ON ANY NECESSARY MODIFICATIONS.
2. CONTRACTOR IS RESPONSIBLE FOR CONFIRMING THE LOCATION OF ALL IRRIGATION FACILITIES WITHIN LOC.
3. THE EXISTENCE AND LOCATIONS OF ALL UNDERGROUND UTILITIES SHOWN ON THE DRAWINGS WERE OBTAINED FROM AVAILABLE RECORDS AND ARE APPROXIMATE. NEITHER THE OWNER NOR THE ENGINEER ASSUMES ANY RESPONSIBILITY FOR UTILITIES NOT SHOWN OR NOT IN THE LOCATION SHOWN. THE CONTRACTOR SHALL DETERMINE THE DEPTH AND LOCATION OF EXISTING UNDERGROUND UTILITIES PRIOR TO EXCAVATION AND SHALL BE REQUIRED TO TAKE ANY PRECAUTIONARY MEASURES TO PROTECT ALL LINES SHOWN AND/ OR ANY OTHER UNDERGROUND UTILITIES NOT OF RECORD OR NOT SHOWN ON THE PLANS. CONTRACTOR SHALL BE RESPONSIBLE FOR CONTACTING ALL FRANCHISE AND CITY UTILITIES PRIOR TO CONSTRUCTION.
4. ELEV ARE TOP FACE OF CURB ELEVATIONS UNLESS OTHERWISE NOTED.
5. ALL TREES NOT TO BE REMOVED MUST BE PROTECTED.
6. CONTRACTOR MUST PROTECT ALL IRRIGATION FACILITIES NOT CALLED TO BE REMOVED.

EX	EXISTING
PROP	PROPOSED
STA	STATION
EL	ELEVATION
PI	POINT OF HORIZONTAL INFLECTION
PC	POINT OF HORIZONTAL CURVATURE
PT	POINT OF HORIZONTAL TANGENCY
PRC	POINT OF HORIZONTAL REVERSE CURVATURE
PVI	POINT OF VERTICAL INFLECTION
AD	ALGEBRAIC DIFFERENCE IN GRADES
VC	VERTICAL CURVE
BVCS/ EVCS	BEGIN/END VERTICAL CURVE STATION
BVCE/ EVCE	BEGIN/END VERTICAL CURVE ELEVATION
PGL	PROPOSED GRADE LINE AT TOP OF CURB
TCE	TEMPORARY CONSTRUCTION EASEMENT
TP	TOP OF PAVEMENT

811 Know what's below. Call before you dig.

No.	REVISIONS	DATE	BY

PROJECT NO. C00057/ BID NO. 27-31

Kimley»Horn
225 E. JOHN W. CARPENTER FREEWAY SUITE 1100
IRVING, TX 75062
PHONE: 214-565-0030
WWW.KIMLEY-HORN.COM
© 2026 KIMLEY-HORN AND ASSOCIATES, INC.
TEXAS REGISTERED ENGINEERING FIRM #F-928

11/06/2026
STATE OF TEXAS
L. NATHAN ANTE
96866
LICENSED
PROFESSIONAL ENGINEER
L. Nathan Ante

KHA PROJECT 063543066			
DATE 11/06/2026	SCALE	AS SHOWN	
	DESIGNED BY	KCH	
	DRAWN BY	ZMZ	
	CHECKED BY	FLS	

ADDISON
ADDISON JUNCTION PUBLIC INFRASTRUCTURE IMPROVEMENTS

ARAPAHO ROAD PLAN
BEGIN TO END

SHEET NUMBER
51

Plotted By: Zmantt, Zach - November 06, 2026 - 02:48:06pm C:\ADCU\ACCDocs\Kimley-Horn\063543066-ADDISON JUNCTION PUBLIC\Project Files\CADD\PlanSheets\PLAN\G_ARAPAHO ROAD.dwg
This document, together with the concepts and designs presented herein, as an instrument of service, is intended only for the specific purpose and client for which it was prepared. Reuse of and improper reliance on this document without written authorization and adaptation by Kimley-Horn and Associates, Inc. shall be without liability to Kimley-Horn and Associates, Inc.

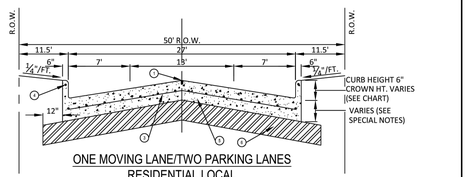

ONE MOVING LANE/TWO PARKING LANES
RESIDENTIAL LOCAL
NTS

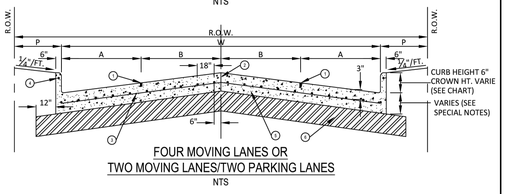

FOUR MOVING LANES OR
TWO MOVING LANES/TWO PARKING LANES
NTS

1. SAWED LONGITUDINAL JOINT.
2. CONSTRUCTION JOINT (FULL WIDTH PAVING IS ALLOWED WHERE APPROVED BY PUBLIC WORKS & ENGINEERING SERVICES.
3. ALL REINFORCING BARS SHALL BE #3 TRANSVERSE BARS TO BE SPACED ON 18" CENTERS. LONGITUDINAL BARS SHALL BE PLACED ON 18" CENTERS EXCEPT WHERE NOTED.
4. CURB REINFORCEMENT SHALL BE A CONTINUOUS #3 BAR.
5. CONCRETE PAVEMENT THICKNESS & DESIGN SHALL BE PER TOWN OF ADDISON GENERAL NOTES SECTION 2.5. MINIMUM 28-DAY COMPRESSIVE STRENGTH: CLASS P1 = 4000 PSI, CLASS P2 = 4500 PSI.
6. MINIMUM 6" LIME TREATED SUBGRADE PER TOWN OF ADDISON GENERAL NOTES SECTION 2.3.

STREET TYPE	STREET WIDTH (W)	A	B	R.O.W. WIDTH	P	CROWN HT.
RESIDENTIAL COLLECTOR	36' *	7'	11'	60'	12'	5"
64' COMMERCIAL/INDUSTRIAL COLLECTOR	44'	10'	12'	64'	10'	6"
68' COMMERCIAL/INDUSTRIAL COLLECTOR	48'	12'	12'	68'	10'	6"

* FULL WIDTH PAVING OF 36' WIDE STREETS IS ALLOWED WHERE APPROVED BY PUBLIC WORKS AND ENGINEERING SERVICES.

ADDISON PUBLIC WORKS & ENGINEERING SERVICES | REINFORCED CONCRETE PAVEMENT | STANDARD CONSTRUCTION DETAILS PAVING | DATE: JANUARY 2022 | REV DATE: APRIL 2023 | SHEET: SD-P02

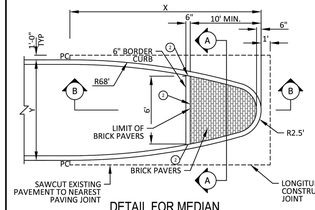

DETAIL FOR MEDIAN
WIDER THAN 6' (Y>6')
NTS

DIMENSION OF MEDIAN NOSE	
X = 13.90' Y = 7.0'	X = 28.80' Y = 16.0'
X = 16.44' Y = 8.0'	X = 29.89' Y = 17.0'
X = 18.08' Y = 9.0'	X = 30.90' Y = 18.0'
X = 20.42' Y = 10.0'	X = 32.93' Y = 20.0'
X = 26.36' Y = 14.0'	X = 36.47' Y = 24.0'
X = 27.60' Y = 15.0'	

1. VEHICULAR BRICK PAVER
2. ½" BITUMINOUS EXPANSION JOINT MATERIAL SHALL BE SUFFICIENT TO PREVENT CONTACT BETWEEN WALK & CURB. STOP EXPANSION JOINT AT ¼" BELOW TOP OF CURB AND FILL WITH CONC. GRAY SEALANT.
3. JOINT SAND COMPRISED OF CRUSHED GRANITE SAND CONFORMING TO ASTM C144 AND A DRY MIX POLYMER BASED JOINT SAND STABILIZER. JOINT SAND STABILIZER SHALL BE APPROVED BY PUBLIC WORKS & ENGINEERING SERVICES PRIOR TO INSTALLATION.
4. BEDDING SAND COMPRISED OF 90% NATURAL OR CRUSHED GRANITE SAND CONFORMING TO ASTM C33 AND 10% PORTLAND CEMENT.

T = PAVEMENT THICKNESS
B = BRICK PAVER THICKNESS

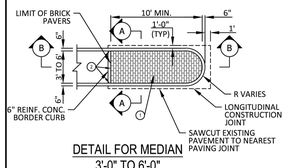

DETAIL FOR MEDIAN
3'-0" TO 6'-0"
NTS

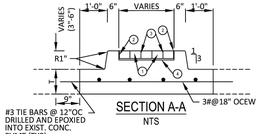

SECTION A-A
NTS

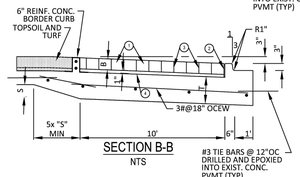

SECTION B-B
NTS

NOTES:
1. BRICK PAVERS HALL BE VEHICULAR PAVERS CONFORMING TO ASTM C1272, TYPE R APPLICATION AND SHALL BE APPROVED BY PUBLIC & ENGINEERING SERVICES.
2. BRICK PAVERS SHALL BE WITHOUT FROGS OR CORES IN SURFACE EXPOSED TO VIEW IN THE COMPLETED WORKS.
3. MEDIAN PAVERS SHALL EXTEND TO A POINT WHERE MEDIAN IS AT LEAST 6' WIDE. IF MEDIAN IS 6' WIDE OR LESS, PAVERS SHALL EXTEND 10' FROM THE NOSE.
4. ALL DISTANCES ARE MINIMUM.
5. THE PORTION OF THE MEDIAN THAT IS 4' WIDE OF LESS SHOULD BE PAVED OR PLANTED WITH SOD/ GROUNDCOVER

ADDISON PUBLIC WORKS & ENGINEERING SERVICES | MEDIAN DETAILS | STANDARD CONSTRUCTION DETAILS PAVING | DATE: JANUARY 2022 | REV DATE: - | SHEET: SD-P13

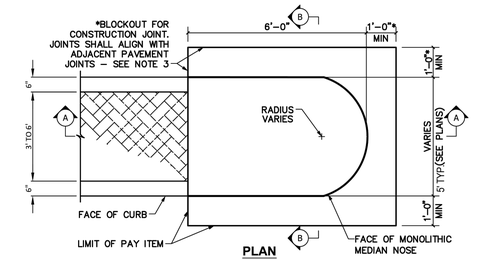

PLAN

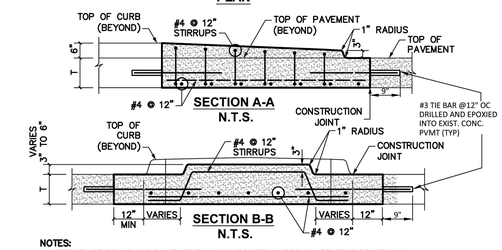

NOTES:
1. REFERENCE STANDARD PAVEMENT MARKINGS DETAIL FOR PLACEMENT OF MEDIAN NOSE PAVEMENT MARKERS.
2. PROVIDE TYPE 1 MONOLITHIC MEDIAN NOSE AT ALL MEDIANS 8' WIDE OR LESS.
3. CONSTRUCTION JOINT MAY BE AN EXPANSION JOINT WHEN INSTALLING MONOLITHIC MEDIAN NOSE ADJACENT TO EXISTING PAVEMENT AT DISCRETION OF ENGINEER.

MONOLITHIC MEDIAN NOSE TYPE 1
N.T.S.

ADDISON PUBLIC WORKS & ENGINEERING SERVICES | MONOLITHIC MEDIAN NOSE TYPE 1 | STANDARD CONSTRUCTION DETAILS PAVING | DATE: JANUARY 2022 | REV DATE: - | SHEET: SD-P14

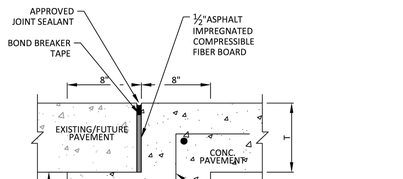

STREET HEADER
NTS

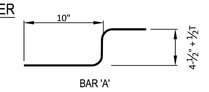

NOTES
1. PAVEMENT BARS TO BE BENT DOWN INTO HEADER.
2. HEADER AND PAVEMENT TO BE MONOLITHIC

T = PAVEMENT THICKNESS

ADDISON PUBLIC WORKS & ENGINEERING SERVICES | STREET HEADER | STANDARD CONSTRUCTION DETAILS PAVING | DATE: JANUARY 2022 | REV DATE: - | SHEET: SD-P17

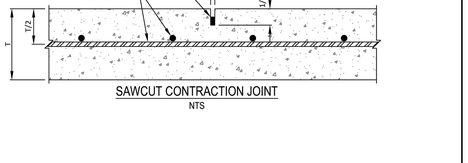

SAWCUT CONTRACTION JOINT
NTS

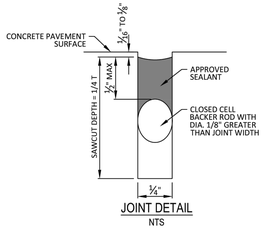

JOINT DETAIL
NTS

ADDISON PUBLIC WORKS & ENGINEERING SERVICES | SAWCUT CONTRACTION JOINT | STANDARD CONSTRUCTION DETAILS PAVING | DATE: JANUARY 2022 | REV DATE: - | SHEET: SD-P19

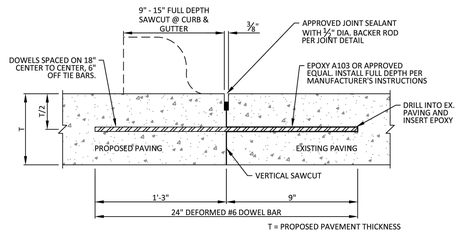

LONGITUDINAL BUTT JOINT
NTS

NOTE:
1. NO. 5 DEFORMED BAR MAY BE USED IN 6 INCH PAVEMENT
2. DOWEL BARS SHALL BE DRILLED INTO PAVEMENT HORIZONTALLY BY USE OF A MECHANICAL RIG.
3. DRILLING BY HAND IS NOT ACCEPTABLE, PUSHING DOWEL BARS INTO GREEN CONCRETE IS NOT ACCEPTABLE.

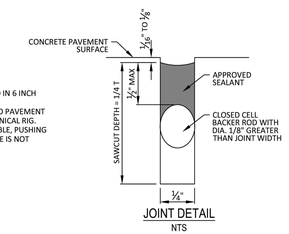

JOINT DETAIL
NTS

ADDISON PUBLIC WORKS & ENGINEERING SERVICES | LONGITUDINAL BUTT JOINT | STANDARD CONSTRUCTION DETAILS PAVING | DATE: JANUARY 2022 | REV DATE: - | SHEET: SD-P20

PAVEMENT THICKNESS	DOWEL DIA.	DOWEL LENGTH	DOWEL SPACING
6"	½"	24"	12"
7"	1"	24"	12"
8"	1"	24"	12"

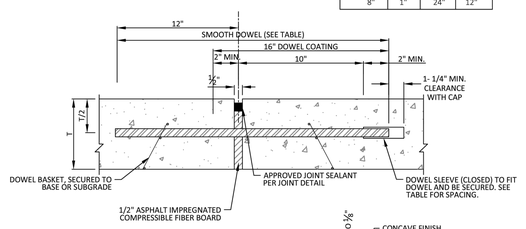

NOTES
1. DOWELS AND REINFORCING BARS SHALL BE SUPPORTED BY AN APPROVED DEVICE AND MUST BE TIED OR CHAIRED ON EACH SIDE.
2. DOWELS MUST BE PERPENDICULAR TO FACE OF CONCRETE.
3. NO. 5 SMOOTH DOWEL BARS MAY BE USED IN 6" PAVEMENT.
4. TRANSVERSE EXPANSION JOINTS SHALL BE LOCATED AT INTERSECTIONS.

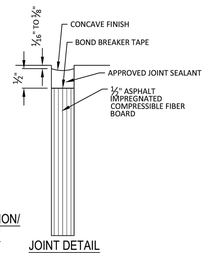

TRANSVERSE ISOLATION/
EXPANSION JOINT
NTS

JOINT DETAIL
NTS

ADDISON PUBLIC WORKS & ENGINEERING SERVICES | TRANSVERSE EXPANSION JOINT | STANDARD CONSTRUCTION DETAILS PAVING | DATE: JANUARY 2022 | REV DATE: - | SHEET: SD-P21

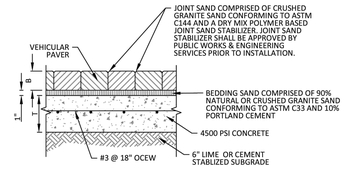

BRICK PAVER INSTALLATION IN
VEHICULAR AREAS
NTS

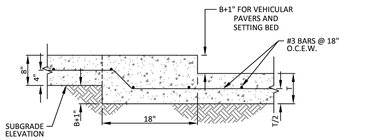

LONGITUDINAL SECTION AT DROP SLAB
NTS

* NO CURB AT BARRIER FREE RAMP

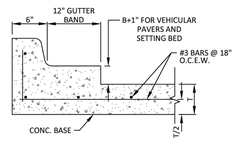

SECTION THRU CURB AT DROP SLAB
NTS

NOTES
1. VEHICULAR PAVERS SHALL BE HEAVY PAVING BRICK MEETING ASTM C1272, TYPE R, APPLICATION AND BE APPROVED BY PUBLIC WORKS & ENGINEERING SERVICES.
2. PROVIDE BRICK WITHOUT FROGS OR CORES IN SURFACES EXPOSED TO VIEW IN COMPLETED WORK.

T = PAVEMENT THICKNESS
B = BRICK PAVER THICKNESS

ADDISON PUBLIC WORKS & ENGINEERING SERVICES | BRICK PAVER INSTALLATION IN VEHICULAR AREAS | STANDARD CONSTRUCTION DETAILS PAVING | DATE: JANUARY 2022 | REV DATE: - | SHEET: SD-P22

No.	REVISIONS	DATE	BY

PROJECT NO. C00057/ BID NO. 27-31

Kimley»Horn
225 E. JOHN W. CARPENTER FREEWAY SUITE 1100
IRVING, TX 75063
PHONE: 214-420-5600
WWW.KIMLEY-HORN.COM

© 2026 KIMLEY-HORN AND ASSOCIATES, INC.
TEXAS REGISTERED ENGINEERING FIRM #F-928

11/06/2026
STATE OF TEXAS
L. NATHAN ANTE
96666
LICENSED
ENGINEER

KHA PROJECT 063543066	DATE 11/06/2026	SCALE AS SHOWN	DESIGNED BY KCH	DRAWN BY ZMZ	CHECKED BY FLS

ADDISON
ADDISON JUNCTION PUBLIC INFRASTRUCTURE IMPROVEMENTS

PAVING
STANDARD DETAILS
(SHEET 1 OF 3)

SHEET NUMBER
52

Plotted By: Zanetti, Zach - November 06, 2026 - 02:30:10pm C:\ACC\ACCDocs\Kimley-Horn\063543066-ADDISON JUNCTION PUBLIC\Project Files\CADD\PlanSheets\QTY DETAILS.dwg
This document, together with the concepts and designs presented herein, as an instrument of service, is intended only for the specific purpose and client for which it was prepared. Reuse of

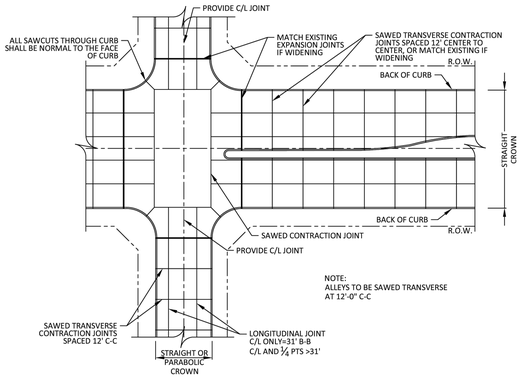

SPACING DIAGRAM FOR TRANSVERSE JOINTS

NTS

PUBLIC WORKS & ENGINEERING SERVICES	SPACING DIAGRAM FOR TRANSVERSE JOINTS	STANDARD CONSTRUCTION DETAILS PAVING		
		DATE: JANUARY 2022	REV DATE: -	SHEET: SD-P23

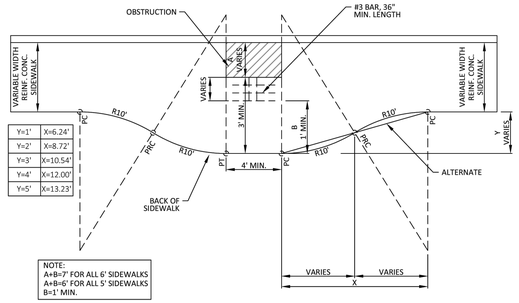

NOTE:
A+B=7' FOR ALL 6' SIDEWALKS
A+B=6' FOR ALL 5' SIDEWALKS
B=1' MIN.

SIDEWALK WIDENING REQUIRED AROUND OBSTACLE IN SIDEWALK

NTS

NOTE:
BUFFER, SIDEWALK, AND PARKWAY WIDTHS SHALL BE PER THE MASTER TRANSPORTATION PLAN

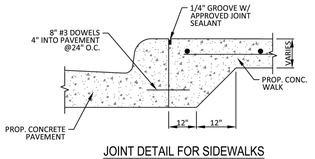

JOINT DETAIL FOR SIDEWALKS ADJACENT TO CURB

NTS

PUBLIC WORKS & ENGINEERING SERVICES	SIDEWALK WIDENING & SIDEWALK ADJACENT TO CURB	STANDARD CONSTRUCTION DETAILS PAVING		
		DATE: JANUARY 2022	REV DATE: -	SHEET: SD-P26

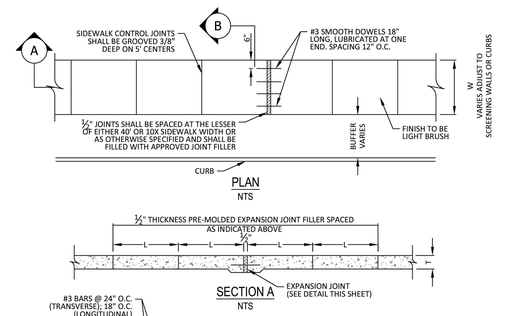

PLAN

NTS

SECTION A

NTS

SECTION B

NTS

NOTE:
WHEN CONCRETE WALK IS ADJACENT TO CURB, DEPTH OF EXPANSION JOINT MATERIAL SHALL BE SUFFICIENT TO PREVENT CONCRETE TO CONCRETE CONTACT BETWEEN WALK AND CURB.

SIDEWALK WIDTH(W)	PANEL LENGTH(L)	SIDEWALK THICKNESS(T)
5'	5'	4"
6'	6'	5"
8'	8'	5"

NOTE:
BUFFER, SIDEWALK, AND PARKWAY WIDTHS SHALL BE PER THE MASTER TRANSPORTATION PLAN

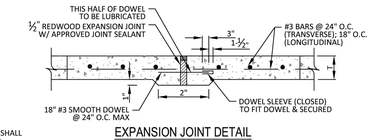

EXPANSION JOINT DETAIL

NTS

PUBLIC WORKS & ENGINEERING SERVICES	CONCRETE SIDEWALK	STANDARD CONSTRUCTION DETAILS PAVING		
		DATE: JANUARY 2022	REV DATE: -	SHEET: SD-P26

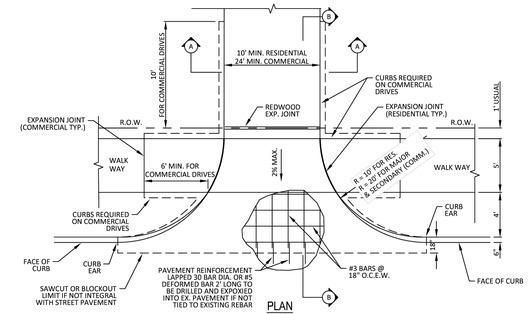

PLAN

NTS

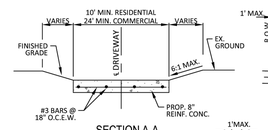

SECTION A-A

NTS

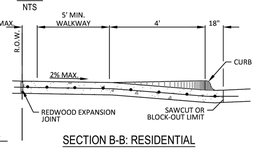

SECTION B-B: RESIDENTIAL

NTS



SECTION B-B: COMMERCIAL

NTS

1. PROPERTY OWNER IS RESPONSIBLE FOR MAINTENANCE OF THE DRIVEWAY RETURN

PUBLIC WORKS & ENGINEERING SERVICES	DRIVEWAY RETURN	STANDARD CONSTRUCTION DETAILS PAVING		
		DATE: JANUARY 2022	REV DATE: -	SHEET: SD-P33

GENERAL NOTES FOR PEDESTRIAN FACILITIES

1. ALL SLOPES ARE MAXIMUM ALLOWABLE. THE LEAST POSSIBLE SLOPE THAT WILL STILL DRAIN PROPERLY SHOULD BE USED. ADJUST CURB RAMP LENGTH OR GRADE OF APPROACH SIDEWALKS AS DIRECTED.
2. LANDINGS SHALL BE 5'X5' MINIMUM WITH A MAXIMUM 2% SLOPE IN ANY DIRECTION.
3. MANEUVERING SPACE AT THE BOTTOM OF CURB RAMPS SHALL BE A MINIMUM OF 4'X4' WHOLLY CONTAINED WITHIN THE CROSSWALK AND WHOLLY OUTSIDE THE PARALLEL VEHICULAR TRAVEL PATH.
4. MAXIMUM ALLOWABLE CROSS SLOPE ON SIDEWALK AND CURB RAMP SURFACES IS 2%.
5. CURB RAMPS WITH RETURNED CURBS MAY BE USED ONLY WHERE PEDESTRIANS WOULD NOT NORMALLY WALK ACROSS THE RAMP, EITHER BECAUSE THE ADJACENT SURFACE IS PLANTING OR OTHER NON-WALKING SURFACE OR BECAUSE THE SIDE APPROACH IS SUBSTANTIALLY OBSTRUCTED. OTHERWISE, PROVIDE FLARED SIDES.
6. ADDITIONAL INFORMATION ON CURB RAMP LOCATION, DESIGN, LIGHT REFLECTIVE VALUE AND TEXTURE MAY BE FOUND IN THE CURRENT EDITION OF THE TEXAS ACCESSIBILITY STANDARDS (TAS) AND 16 TAC §8B.102.
7. CURB RAMPS SHALL BE ALIGNED WITH THEORETICAL CROSSWALKS, OR AS DIRECTED BY PUBLIC WORKS AND ENGINEERING SERVICES.
8. HANDRAILS ARE NOT REQUIRED ON CURB RAMPS. PROVIDE CURB RAMPS WHEREVER AN ACCESSIBLE ROUTE CROSSES (PENETRATES) A CURB.
9. FLARE SLOPE SHALL NOT EXCEED 10% MEASURED ALONG CURB LINE.
10. BARRIER FREE RAMPS SHALL BE CONSTRUCTED IN ACCORDANCE WITH THE CURRENT EDITION OF THE TEXAS ACCESSIBILITY STANDARDS (TAS).
11. ALL BARRIER FREE RAMPS MUST PASS AN INDEPENDENT INSPECTION PROVIDED BY THE TOWN'S REGISTERED ACCESSIBILITY SPECIALIST CONSULTANT. A LETTER OF COMPLIANCE ACCEPTANCE IS REQUIRED PRIOR TO FINAL ACCEPTANCE BY THE TOWN OF ADDISON.
12. STREETS ON STEEP GRADE WILL REQUIRE LONGER TRANSITION ON UPGRADE SIDE.
13. MAXIMUM SLOPE ON RAMP PORTION SHALL NOT EXCEED 1" PER FOOT AT ANY LOCATION. VERTICAL DISTANCE BETWEEN STREET AND RAMP SHALL NOT EXCEED ½".

GENERAL NOTES FOR DETECTABLE WARNINGS

1. CURB RAMPS MUST CONTAIN A DETECTABLE WARNING SURFACE THAT CONSISTS OF RAISED TRUNCATED DOMES COMPLYING WITH SECTION 4.29 OF THE TEXAS ACCESSIBILITY STANDARDS (TAS). THE SURFACE MUST CONTRAST VISUALLY WITH THE ADJOINING SURFACES, INCLUDING SIDE FLARES. FURNISH DARK RED COLORED DETECTABLE WARNING SURFACE ADJACENT TO UNCOLORED CONCRETE AND CREAM COLORED DETECTABLE WARNING SURFACE ADJACENT TO DARK RED COLORED BRICK PAVERS CONTRASTING COLOR APPROVED BY THE TOWN.
2. DETECTABLE WARNING SURFACES MUST BE SLIP RESISTANT AND NOT ALLOW WATER TO ACCUMULATE.
3. ALIGN TRUNCATED DOMES IN THE DIRECTION OF PEDESTRIAN TRAVEL WHEN ENTERING THE STREET.
4. DETECTABLE WARNING SURFACES SHALL BE A MINIMUM OF 24" IN LENGTH IN THE DIRECTION OF PEDESTRIAN TRAVEL AND EXTEND THE FULL WIDTH OF THE CURB RAMP OR LANDING WHERE THE PEDESTRIAN ACCESS ROUTE ENTERS THE STREET.
5. DETECTABLE WARNING SURFACES SHALL BE LOCATED SO THAT THE EDGE NEAREST THE CURB LINE IS A MINIMUM OF 6" AND A MAXIMUM OF 8" FROM THE EXTENSION OF THE FACE OF CURB AND SHALL BE AN INTEGRAL PART OF THE WALKING SURFACE. DETECTABLE WARNING SURFACES MAY BE CURVED ALONG THE CORNER RADIUS.

GENERAL NOTES FOR DETECTABLE WARNING PAVER UNITS

1. DETECTABLE WARNING PAVER UNITS SHALL MEET OR EXCEED ALL REQUIREMENTS OF ASTM C936, C33, AND BE LAID IN A TWO BY TWO UNIT BASKET WEAVE PATTERN OR AS DIRECTED.
2. LAY FULL-SIZE UNITS FIRST FOLLOWED BY CLOSURE UNITS CONSISTING OF AT LEAST 25% OF A FULL UNIT. CUT DETECTABLE WARNING PAVER UNITS USING A POWER SAW.

PUBLIC WORKS & ENGINEERING SERVICES	PEDESTRIAN FACILITIES GENERAL NOTES	STANDARD CONSTRUCTION DETAILS PAVING		
		DATE: JANUARY 2022	REV DATE: -	SHEET: SD-P35

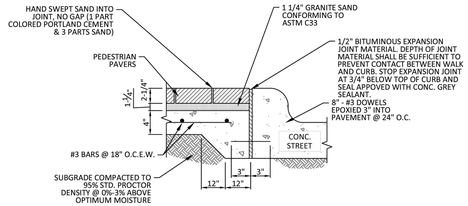

SECTION A-A

NTS

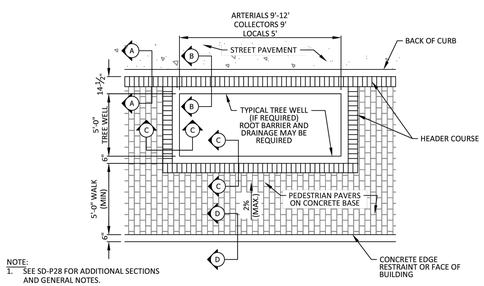

NOTE:
1. SEE SD-P28 FOR ADDITIONAL SECTIONS AND GENERAL NOTES.
2. BUFFER, SIDEWALK, AND PARKWAY WIDTHS SHALL BE PER THE MASTER TRANSPORTATION PLAN.
3. REFER TO SUBSURFACE DRAINAGE (D-36) DETAIL IN STORM DRAIN DETAIL SET.

SIDEWALK PLAN: BRICK PAVERS

NTS

PUBLIC WORKS & ENGINEERING SERVICES	SIDEWALK BRICK PAVERS	STANDARD CONSTRUCTION DETAILS PAVING		
		DATE: JANUARY 2022	REV DATE: -	SHEET: SD-P27

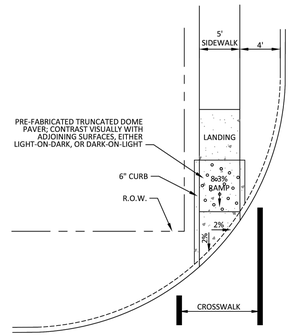

DIRECTIONAL RAMP WITHIN RADIUS

NTS

PUBLIC WORKS & ENGINEERING SERVICES	PEDESTRIAN RAMPS	STANDARD CONSTRUCTION DETAILS PAVING		
		DATE: JANUARY 2022	REV DATE: -	SHEET: SD-P36

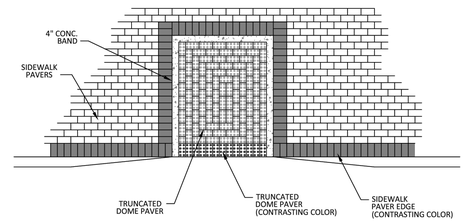

NOTE:
ALL PAVER COLORS TO BE APPROVED BY ADDISON PUBLIC WORKS & ENGINEERING SERVICES

PUBLIC WORKS & ENGINEERING SERVICES	TYPICAL PATTERN FOR PAVER SIDEWALK AND CURB RAMP	STANDARD CONSTRUCTION DETAILS PAVING		
		DATE: JANUARY 2022	REV DATE: -	SHEET: SD-P37

No.	REVISIONS	DATE	BY

PROJECT NO. C00057/ BID NO. 27-31

Kimley»Horn
225 E. JOHN W. CARPENTER FREEWAY SUITE 1100
IRVING, TX 75063
PHONE: 214-420-5600
WWW.KIMLEY-HORN.COM
© 2026 KIMLEY-HORN AND ASSOCIATES, INC.

11/06/2026

STATE OF TEXAS
L. NATHAN ANTE
96666
LICENSED
PROFESSIONAL ENGINEER
L. Nathan Ante

KHA PROJECT 063543066	DATE 11/06/2026	SCALE AS SHOWN
		DESIGNED BY KCH
		DRAWN BY ZMZ
		CHECKED BY FLS

ADDISON
ADDISON JUNCTION PUBLIC INFRASTRUCTURE IMPROVEMENTS

PAVING
STANDARD DETAILS
(SHEET 2 OF 3)

SHEET NUMBER
53

Plotted By: Zanetti, Zach - November 06, 2026 - 02:30:18pm C:\ACC\ACCDocs\Kimley-Horn\063543066-ADDISON JUNCTION PUBLIC\Project Files\CADD\PlanSheets\QTY DETAILS.dwg
This document, together with the concepts and designs presented herein, as an instrument of service, is intended only for the specific purpose and client for which it was prepared. Reuse of and improper reliance on this document without written authorization and adaptation by Kimley-Horn and Associates, Inc. shall be without liability to Kimley-Horn and Associates, Inc.

TYPICAL PLACEMENT OF DETECTABLE WARNING SURFACE ON LANDING AT STREET EDGE

NTS

TRUNCATED DOME PATTERN CURB RAMP

NTS

TYPICAL PLACEMENT OF DETECTABLE WARNING SURFACE ON SLOPING RAMP RUN

NTS

DETECTABLE WARNING PAVER

NTS

SECTION A-A

NTS

ADDISON PUBLIC WORKS & ENGINEERING SERVICES

DETECTABLE WARNING PAVER

STANDARD CONSTRUCTION DETAILS
PAVING

DATE:	REV DATE:	SHEET:
JANUARY 2022	-	SD-P38

Plotted By: Zanetti, Zach - November 06, 2026 02:30:25pm C:\ACC\ACCDocs\Kimley-Horn\08354306#-ADDISON JUNCTION PUBLIC\Project Files\CADD\PlanSheets\CITY DETAILS.dwg
This document, together with the concepts and designs presented herein, as an instrument of service, is intended only for the specific purpose and client for which it was prepared. Reuse of and improper reliance on this document without written authorization and adaptation by Kimley-Horn and Associates, Inc. shall be without liability to Kimley-Horn and Associates, Inc.

No.	REVISIONS	DATE	BY

PROJECT NO. C00057/ BID NO. 27-31

Kimley»Horn
225 E. JOHN W. CARPENTER FREEWAY SUITE 1100
IRVING, TX 75063
PHONE: 214-420-5600
WWW.KIMLEY-HORN.COM
© 2026 KIMLEY-HORN AND ASSOCIATES, INC.
TEXAS REGISTERED ENGINEERING FIRM #F-928

11/06/2026

STATE OF TEXAS
L. NATHAN ANTE
96666
LICENSED
PROFESSIONAL ENGINEER

KHA PROJECT 063543066
DATE 11/06/2026
SCALE AS SHOWN
DESIGNED BY KCH
DRAWN BY ZMZ
CHECKED BY FLS

ADDISON
ADDISON JUNCTION PUBLIC INFRASTRUCTURE IMPROVEMENTS

PAVING
STANDARD DETAILS
(SHEET 3 OF 3)

SHEET NUMBER
54

DISCLAIMER:
The use of this standard is governed by the "Texas Engineering Practice Act." No warranty of any kind is made by TxDOT for any purpose whatsoever. TxDOT assumes no responsibility for the conversion of this standard to other formats or for incorrect results or damages resulting from its use.

DATE:
FILE:

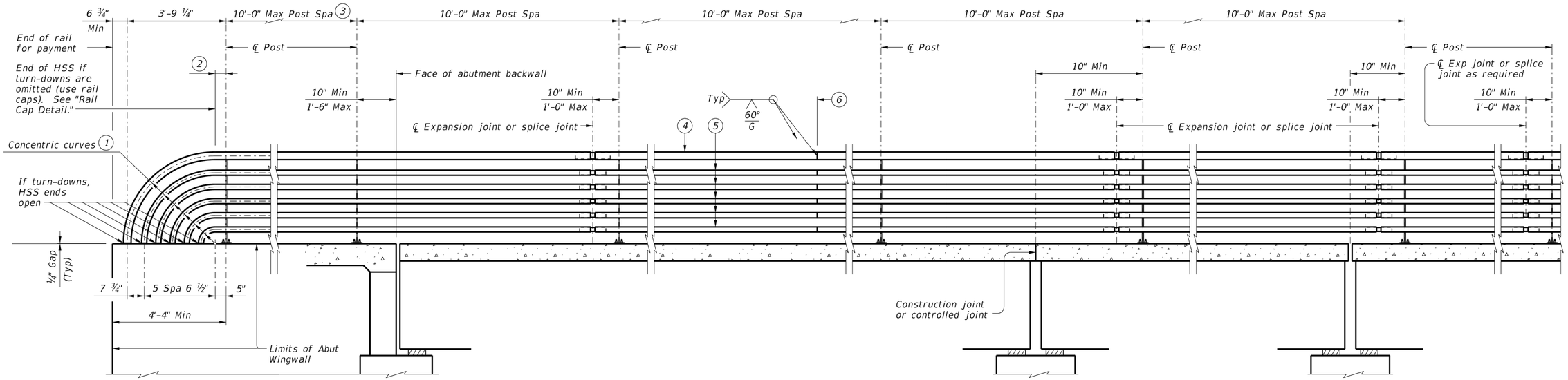

ROADWAY ELEVATION OF RAIL

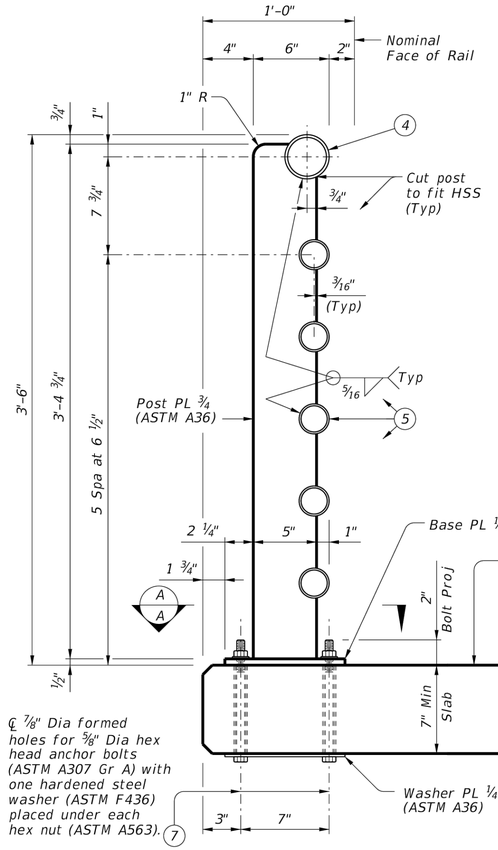

ON BRIDGE SLAB

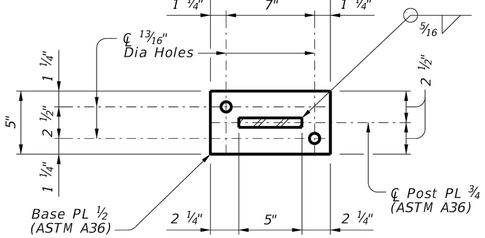

SECTION A-A

Showing base plate detail.

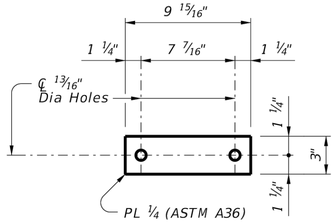

WASHER PLATE DETAIL

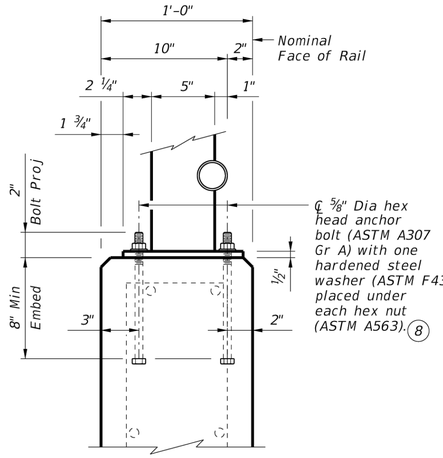

ON ABUTMENT WINGWALLS OR CIP RETAINING WALLS

SECTIONS THRU RAIL

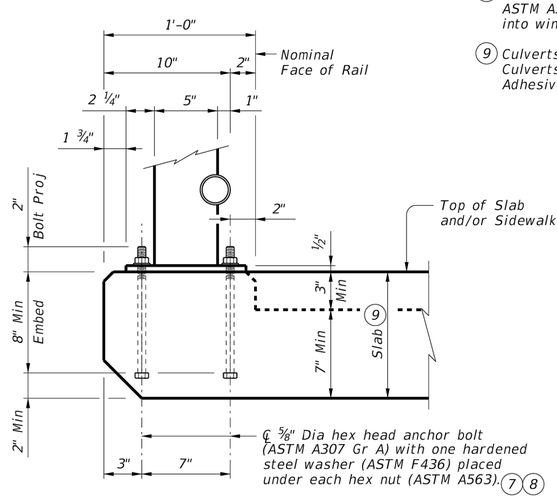

ON CULVERTS WITH OR WITHOUT CURBS

Used with 1'-0" Min thick parallel wings on culverts.

1. Portion of railing with turn-downs to be used or omitted as indicated on Bridge Layout.
2. 10" Min ~ 1'-6" Max if turn-downs are omitted.
3. Min of 2 posts required on wingwall.
4. HSS 3.500 x 0.216 (Rail Member)
5. HSS 2.375 x 0.154 (Rail Member)
6. One shop splice per panel is permitted (with minimum 85 percent penetration). The weld may be square groove or single V groove. Grind smooth.
7. At Contractor's option, adhesive anchors may be used. Adhesive anchors must be ⅝" Dia ASTM A307 Grade A fully threaded rods. Minimum adhesive anchor embedment depth is 5" into slabs or culverts without curbs. See "Material Notes" for adhesive anchor requirements.
8. At Contractor's option, adhesive anchors may be used. Adhesive anchors must be ⅝" Dia ASTM A307 Grade A fully threaded rods. Minimum adhesive anchor embedment depth is 7" into wingwalls or culverts with curbs. See "Material Notes" for adhesive anchor requirements.
9. Culverts without curbs for cast-in-place anchor bolts require a 10" Min slab thickness. Culverts with curbs for cast-in-place anchor bolts require a curb plus slab thickness of 10" Min. Adhesive anchors may be used with a 7" Min slab thickness or culverts with curbs.

SHEET 1 OF 2

Texas Department of Transportation

Bridge Division Standard

PEDESTRIAN RAIL

TYPE PR11

FILE: RL-PR11-19.dgn	DN: TAR	CK: TBE	DW: JTR	CK: TAR
©TxDOT September 2019	CONT	SECT	JOB	HIGHWAY
REVISIONS				
	DIST	COUNTY		SHEET NO.
				55

DISCLAIMER:
The use of this standard is governed by the "Texas Engineering Practice Act." No warranty of any kind is made by TxDOT for any purpose whatsoever. TxDOT assumes no responsibility for the conversion of this standard to other formats or for incorrect results or damages resulting from its use.

DATE:
FILE:

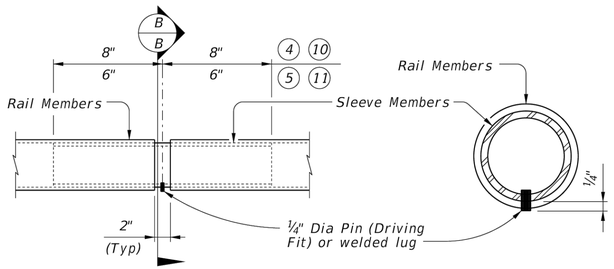

AT SPLICES OR EXP JTS

SECTION B-B

PIPE SPLICE DETAIL

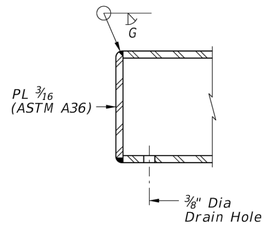

RAIL CAP DETAIL

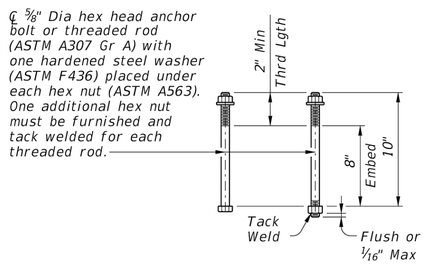

CAST-IN-PLACE & FORMED HOLE ANCHOR BOLT OPTIONS

④ HSS 3.500 x 0.216 (Rail Member)

⑤ HSS 2.375 x 0.154 (Rail Member)

⑩ HSS 2.875 x 0.203 (Sleeve Member)

⑪ HSS 1.900 x 0.145 (Sleeve Member)

CONSTRUCTION NOTES:

Panel lengths of railing must be attached to a minimum of three posts except at abutment wingwalls.

At the Contractor's option anchor bolts may be an adhesive anchorage system. See "Material Notes."

Test adhesive anchors in accordance with Item 450.3.3, "Tests". Test 3 anchors per 100 anchors installed. Perform corrective measures to provide adequate capacity if any of the tests do not meet the required test load. Repair damage from testing as directed.

Face of rail and posts must be vertical transversely unless otherwise approved. Posts must be perpendicular to adjacent roadway grade. Use Type VIII epoxy mortar under post base plates if gaps larger than 1/16" exist.

For curved railing applications, fabricate the HSS rail to the radius when the radius is 600' or less. Submit shop drawings for approval when tubes are required to be fabricated to a radius. Shop drawings must be submitted to the Engineer for approval.

Round or chamfer all exposed edges of steel components 1/16" by grinding prior to galvanizing.

MATERIAL NOTES:

Provide ASTM A500 Gr B, A1085 or A53 Gr B for all HSS.

Galvanize all metal components of steel rail system. Apply additional coatings when shown elsewhere on the plans. When plans require paint over galvanizing, follow the requirements for painting galvanized steel in Item 445, "Galvanizing" and when field painting, Item 446, "Field Cleaning and Painting Steel." Sleeve members and anchor bolts must receive galvanization prior to installation and only field paint after installation unless directed otherwise by Engineer.

Anchor bolts must be 5/8" Dia ASTM A307 Gr A with one hardened steel washer (ASTM F436) placed under each hex nut or ASTM A307 Gr A threaded rods with one tack welded hex nut each and with one hex nut with one hardened steel washer (ASTM F436) each. Nuts must conform to ASTM A563 requirements.

Optional adhesive anchorage system must be 5/8" Dia ASTM A307 Gr A fully threaded rods with one hex nut and one hardened steel washer (ASTM F436). Nuts must conform to ASTM A563 requirements. Embed fully threaded rods into slab, wingwalls, or culvert curbs using a Type III, Class C, D, E, or F anchor adhesive. Anchor adhesive chosen must be able to achieve a nominal bond strength in tension, Na, of a single anchor of 10 kips (edge distance must be accounted for). Submit signed and sealed calculations or the manufacturer's published literature showing the proposed anchor adhesive's ability to develop this load to the Engineer for approval prior to use. Anchor installation, including hole size, drilling, and clean out, must be in accordance with Item 450, "Railing".

GENERAL NOTES:

Designed according to AASHTO LRFD Specifications.

Do not use this railing on bridges with expansion joints providing more than 5" movement.

Rail anchorage details shown on this standard may require modification for select structure types. See appropriate details elsewhere in plans for these modifications.

For all rails, submit erection drawings showing section lengths, splice locations, rail post spacing and anchor bolt setting for approval.

Average weight of railing is 30 plf.

Texas Department of Transportation

Bridge Division Standard

PEDESTRIAN RAIL

TYPE PR11

FILE: RL-PR11-19.dgn	DN: TAR	CK: TBE	DW: JTR	CK: TAR
©TxDOT September 2019	CONT	SECT	JOB	HIGHWAY
REVISIONS				
	DIST	COUNTY		SHEET NO.
				56

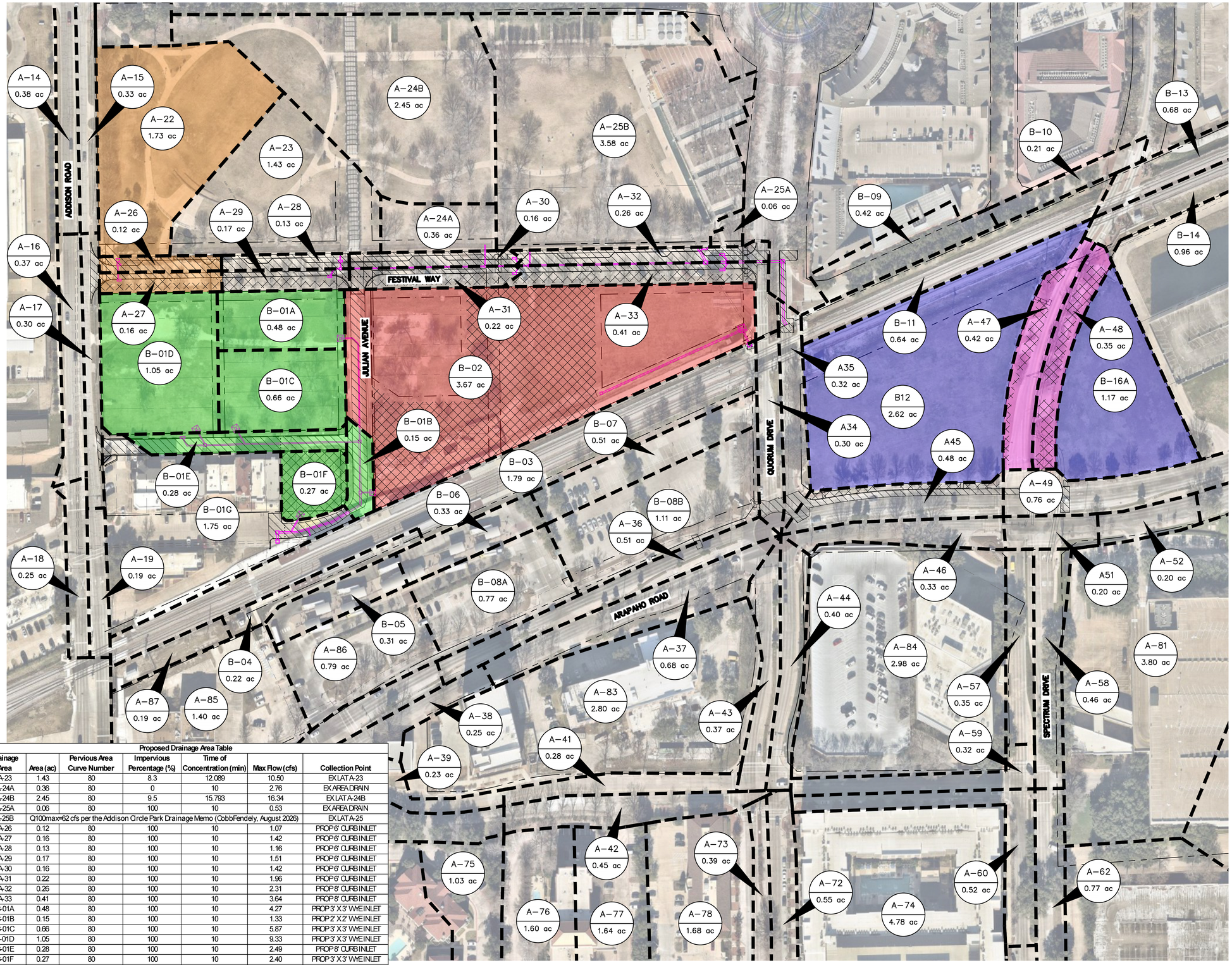

Proposed Drainage Area Table						
Drainage Area	Area (ac)	Pervious Area Curve Number	Impervious Percentage (%)	Time of Concentration (min)	Max Flow (cfs)	Collection Point
A-23	1.43	80	8.3	12.089	10.50	EX LAT A-23
A-24A	0.36	80	0	10	2.76	EX AREA DRAIN
A-24B	2.45	80	9.5	15.793	16.34	EX LAT A-24B
A-25A	0.06	80	100	10	0.53	EX AREA DRAIN
A-25B	Q100max=62 cfs per the Addison Circle Park Drainage Memo (CobbFendely, August 2026)					EX LAT A-25
A-26	0.12	80	100	10	1.07	PROP 6' CURB INLET
A-27	0.16	80	100	10	1.42	PROP 6' CURB INLET
A-28	0.13	80	100	10	1.16	PROP 6' CURB INLET
A-29	0.17	80	100	10	1.51	PROP 6' CURB INLET
A-30	0.16	80	100	10	1.42	PROP 6' CURB INLET
A-31	0.22	80	100	10	1.96	PROP 6' CURB INLET
A-32	0.26	80	100	10	2.31	PROP 8' CURB INLET
A-33	0.41	80	100	10	3.64	PROP 8' CURB INLET
B-01A	0.48	80	100	10	4.27	PROP 3' X 3' WYE INLET
B-01B	0.15	80	100	10	1.33	PROP 2' X 2' WYE INLET
B-01C	0.66	80	100	10	5.87	PROP 3' X 3' WYE INLET
B-01D	1.05	80	100	10	9.33	PROP 3' X 3' WYE INLET
B-01E	0.28	80	100	10	2.49	PROP 8' CURB INLET
B-01F	0.27	80	100	10	2.40	PROP 3' X 3' WYE INLET
B-01G	1.75	80	100	10	15.55	EX SLOTTED DRAIN
B-02	3.67	80	100	10	32.61	PROP 4' X 4' WYE INLET

NORTH

GRAPHIC SCALE IN FEET
0 40 80 160

— DRAINAGE BASIN NUMBER
XX ac — DRAINAGE BASIN SIZE (ACRES)

LEGEND

- EX ROW
- PROP ROW
- EX STORM DRAIN
- PROP STORM DRAIN
- FLOW DIRECTION
- DRAINAGE BASIN BOUNDARY
- PROJECT AREA FOR PACKAGE 1 IMPROVEMENTS BY KH
- PROJECT AREA FOR PACKAGE 2 IMPROVEMENTS BY KH
- DRAINAGE BASIN 1
- DRAINAGE BASIN 2
- DRAINAGE BASIN 3
- DRAINAGE BASIN 4
- DRAINAGE BASIN 5
- DRAINAGE BASIN 6

NOTES

1. DRAINAGE AREAS LOCATED OUTSIDE THE PROJECT LIMITS ARE BASED ON THE ADDISON CIRCLE BASIN WATERSHED STORM MODELING PREPARED BY COBBFENDLEY (DECEMBER 2020) AND PROVIDED TO KIMLEY-HORN.

Know what's below.
Call before you dig.

No.	REVISIONS	DATE	BY

PROJECT NO. C00057/ BID NO. 27-31

Kimley»Horn
225 E. JOHN W. CARPENTER FREEWAY SUITE 1100
IRVING, TX 75062
PHONE: 214-369-2300
WWW.KIMLEY-HORN.COM

© 2026 KIMLEY-HORN AND ASSOCIATES, INC.

TEXAS REGISTERED ENGINEERING FIRM #F-928

11/06/2026

STATE OF TEXAS
CAROLYN F. COX
122243
LICENSED
PROFESSIONAL ENGINEER
Carolyn Cox

KHA PROJECT 063543066			
DATE 11/06/2026	SCALE AS SHOWN	DESIGNED BY KCH	
		DRAWN BY ZMZ	
		CHECKED BY FLS	

ADDISON
ADDISON JUNCTION
PUBLIC
INFRASTRUCTURE
IMPROVEMENTS

PROPOSED
DRAINAGE AREA
MAP

SHEET NUMBER
57

Plotted By: Mooney, Joseph November 06, 2026 01:37:14pm G:\ACS\ACSProj\Vine\Vine\063543066-ADDISON_JUNCTION PUBLIC\Project Files\CAD\PlanSheets\DRAINAGE\ADDISON_JUNCTION_PROP.dwg
This document, together with the concepts and designs presented herein, as an instrument of service, is intended only for the specific purpose and client for which it was prepared. Reuse of and improper reliance on this document without written authorization and adaptation by Kimley-Horn and Associates, Inc. shall be without liability to Kimley-Horn and Associates, Inc.

CURB INLET SPREAD CALCULATIONS

Drainage Areas									Sag Inlet Percentage of Flow From		Sag Inlet DA Flow Reaching Inlet From (cfs)		Sag Inlet Total Flow Reaching Inlet From (cfs)		Street Longitudinal Slope (ft/ft)																										
Area Name	Area Size (ac)	Pervious Area Curve Number	Time of Concentration (min)	Design Storm	Impervious Percentage (%)	100-Year Runoff (cfs)	100-Year Carryover (cfs)	100-Year Total Gutter (cfs)	Lower STA	Higher STA	Lower STA	Higher STA	Lower STA	Higher STA	Lower STA	Higher STA	Pavement Width (ft)	Dry Lane Requirement (ft)	Roadway Cross Slope (ft/ft)	Mannings "n"	Allowable Street Capacity (cfs)	Depth of Gutter Flow (ft) Lower STA	Depth of Gutter Flow (ft) Higher STA	Sag Inlet Head at Inlet Opening (ft)	Spread of Flow (ft) Lower STA	Spread of Flow (ft) Higher STA	Allowable Spread (ft)	Spread Delta (ft) Lower STA	Spread Delta (ft) Higher STA	Gutter Cross Slope (%)	Width of Depressed Gutter (ft)	Ratio of Gutter Flow to Total Flow	Gutter Depression Depth (ft)	Equivalent Cross Slope (%)	Pickup Per Foot Qo/Lo (cfs/ft)	Effective Head at Centroid	(Orifice Control - Sags) Required Length where d>h "L_i" (ft)	(Weir Control - Sags) 100-year Required Length "L_i" (ft)	Required Inlet Length to Capture 100% of Gutter Flow (ft)	Actual Inlet Length (ft)	Inlet Efficiency	On-Grade Captured Flow (cfs)	Sag Inlet Capacity (cfs)	Bypass Flow (cfs)	Bypass Flow to Inlet
SYSTEM A																																									
A-26	0.12	80.00	10.00	100-YEAR	100	1.07	---	1.07							0.020		11.00	0.00	0.020	0.0175	3.99	0.13			6.72		11.00	4.28		0.17	2.00	0.87	0.33	0.16	0.45				2.39	6	100%	2.67		0.00	---
A-27	0.16	80.00	10.00	100-YEAR	100	1.42	---	1.42							0.020		11.00	0.00	0.020	0.0175	3.99	0.15			7.49		11.00	3.51		0.17	2.00	0.83	0.33	0.16	0.46				3.10	6	100%	2.75		0.00	---
A-28	0.13	80.00	10.00	100-YEAR	100	1.16	---	1.16	93%	7%	1.07	0.08	1.07	0.08	0.012	0.010	11.00	0.00	0.010	0.0175	0.97 / 0.90	0.11	0.04	0.12	11.48	4.49	11.00	-0.48	6.51	0.17	2.00	0.77	0.33	0.14	0.43	0.00	N/A	6.02	6.02	6	100%		1.15	0.00	SAG
A-29	0.17	80.00	10.00	100-YEAR	100	1.51	---	1.51							0.012		11.00	0.00	0.020	0.0175	3.09	0.17			8.43		11.00	2.57		0.17	2.00	0.78	0.33	0.15	0.47				3.18	6	100%	2.85		0.00	---
A-30	0.16	80.00	10.00	100-YEAR	100	1.42	---	1.42							0.018		11.00	0.00	0.020	0.0175	3.79	0.15			7.64		11.00	3.36		0.17	2.00	0.82	0.33	0.16	0.46				3.09	6	100%	2.77		0.00	---
A-31	0.22	80.00	10.00	100-YEAR	100	1.96	---	1.96							0.018		11.00	0.00	0.020	0.0175	3.79	0.17			8.60		11.00	2.40		0.17	2.00	0.77	0.33	0.15	0.48				4.09	6	100%	2.87		0.00	---
A-32	0.26	80.00	10.00	100-YEAR	100	2.31	---	2.31	79%	21%	1.82	0.49	1.82	0.49	0.011	0.003	11.00	0.00	0.020	0.0175	2.93 / 1.41	0.19	0.15	0.20	9.26	7.41	11.00	1.74	3.59	0.17	2.00	0.74	0.33	0.14	0.21	0.00	N/A	4.95	4.95	8	100%		3.13	0.00	SAG
A-33	0.34	80.00	10.00	100-YEAR	100	3.02	---	3.02	81%	19%	2.45	0.57	2.45	0.57	0.011	0.003	11.00	0.00	0.020	0.0175	2.93 / 1.41	0.21	0.16	0.22	10.34	7.89	11.00	0.66	3.11	0.17	2.00	0.68	0.33	0.13	0.24	0.00	N/A	6.02	6.02	8	100%		3.64	0.00	SAG
SYSTEM B																																									
B-01E	0.28	80.00	10.00	100-YEAR	100	2.49	---	2.49	20%	80%	0.50	1.99	0.50	1.99	0.003	0.003	24.00	10.00	0.020	0.0175	2.68 / 2.94	0.15	0.24	0.27	7.48	12.15	14.00	6.52	1.85	0.17	2.00	0.60	0.33	0.12	0.17	0.02	N/A	2.26	2.26	8	100%		4.92	0.00	SAG

HYDRAULIC GRADE CALCULATIONS

Start Node	End Node	Link	Runoff Collection Point (Inlet or Manhole) Upstream Station	Runoff Collection Point (Inlet or Manhole) Downstream Station	Distance Between Collection Points	Storm Water Runoff "Q" (cfs)	Full Flow Capacity "Qcap" (cfs)	Slope of Hydraulic Gradient "Sf" (ft/ft)	Number of Boxes or Pipes (No.)	Shape of Pipe	Diameter of Pipes (ft)	Width of Box (ft)	Height of Box or Pipes (ft)	Velocity in Sewer Between Collection Points "V" (fps)	Velocity Head at Upstream Station (ft)	Hydraulic Grade Line Elevation Downstream (elev)	Hydraulic Grade Line Elevation Upstream (elev)	Remarks
LINEA1														LINEA1				
A-35_MH6	A-1_BEND1	2000.1	1+19.58	1+10.00	615.61	94.2	55.3	0.0005	1	Circular	3.5	-	-	9.94	1.53	617.59	619.03	
A-1_BEND1	A-1_MH1	2000.2	2+17.91	1+19.58	615.91	94.2	55.5	0.0005	1	Circular	3.5	-	-	9.57	1.42	619.03	620.18	
A-1_MH1	A-1_MH2	2001	3+08.99	2+17.91	616.19	94.2	55.5	0.0006	1	Circular	3.5	-	-	9.73	1.47	620.18	621.34	
A-1_MH2	A-1_MH3	2004	3+46.65	3+08.99	616.30	89.5	55.6	0.0005	1	Circular	3.5	-	-	9.27	1.33	621.34	621.97	
A-1_MH3	A-1_MH4	2005	6+39.98	3+46.65	623.91	27.1	28.6	0.0011	1	Circular	2	-	-	8.93	1.24	621.97	626.22	
A-1_MH4	A-1_MH5	2006	6+57.04	6+39.98	625.11	16.7	11.5	0.0005	1	Circular	1.5	-	-	9.42	1.38	626.22	627.11	
A-1_MH5	A-1_WYE1	2009	7+14.27	6+57.04	625.80	13.5	11.5	0.0004	1	Circular	1.5	-	-	7.63	0.90	627.11	628.28	
A-1_WYE1	A-1_MH6	2011	9+56.04	7+14.27	628.70	11.3	11.5	0.0004	1	Circular	1.5	-	-	6.69	0.70	628.28	631.14	
A-1_MH6	A-1_BEND2	2013	9+66.54	9+56.04	631.06	1.5	11.5	0.0001	1	Circular	1.5	-	-	4.01	0.25	631.14	631.46	
A-1_BEND2	A-29	2015	9+79.82	9+66.54	631.19	1.5	10.5	0.0001	1	Circular	1.5	-	-	2.88	0.13	631.46	631.71	
LATA-23														LATA-23				
A-1_MH6	A-28	2012	1+21.50	1+10.00	628.99	10.1	16.7	0.0003	1	Circular	1.5	-	-	6.38	0.63	631.14	631.36	
A-28	A23_EX	2014	1+30.84	1+21.50	629.41	9.4	25.9	0.0004	1	Circular	1.5	-	-	7.07	0.78	631.36	631.51	
LATA-24A														LATA-24A				
A-1_WYE1	A-24A	2010	1+45.55	1+10.00	628.50	2.8	29.0	0.0195	1	Circular	1.5	-	-	5.54	0.48	628.28	628.98	
LATA-24B														LATA-24B				
A-1_MH4	A-24B_EX	156.1	1+32.83	1+10.00	625.09	11.6	10.5	0.0002	1	Circular	1.5	-	-	6.62	0.68	626.22	626.63	
LATA-25														LATA-25				
A-1_MH3	A-25_MH1	163	1+34.90	1+10.00	616.42	62.6	47.2	0.0005	1	Circular	3	-	-	8.80	1.20	621.97	622.48	
A-25_MH1	A-25_BEND1	163.1	1+46.80	1+34.90	617.00	0.5	23.1	0.0000	1	Circular	1.5	-	-	3.54	0.19	622.48	622.48	Max HGL controlled by downstream backwater with forward and reverse flow accounted for in the in XPSWMM model
A-25_BEND1	A-25_EX	163.2	1+49.80	1+46.80	617.14	0.5	23.1	0.0000	1	Circular	1.5	-	-	3.44	0.18	622.48	622.48	
A-25_EX	A-25A	163.3	1+71.61	1+49.80	618.00	0.5	11.9	0.0000	1	Circular	1.25	-	-	0.42	0.00	622.48	622.48	
LATA-30														LATA-30				
A-1_MH5	A-30	2007	1+13.28	1+00.00	627.36	1.4	38.1	0.0174	1	Circular	1.5	-	-	5.47	0.46	627.11	627.64	
LATA-31														LATA-31				
A-1_MH5	A-31	2008	1+13.28	1+00.00	627.36	1.9	38.1	0.0146	1	Circular	1.5	-	-	5.95	0.55	627.11	627.71	
LATA-32														LATA-32				
A-1_MH2	A-32	2002	1+13.28	1+00.00	620.84	1.6	51.2	0.0150	1	Circular	1.5	-	-	3.47	0.19	621.34	621.21	
LATA-33														LATA-33				
A-1_MH2	A-33	2003	1+13.28	1+00.00	620.84	3.3	51.2	0.0200	1	Circular	1.5	-	-	4.24	0.28	621.34	621.44	
B-01A														B-01A				
B-01G	B-01A_MH1	1000	1+29.47	1+14.47	624.22	23.5	53.6	0.0001	1	Circular	3	-	-	3.67	0.21	626.89	626.95	
B-01A_MH1	B-01A_WYE1	1001	1+52.29	1+29.47	624.34	23.5	29.0	0.0001	1	Circular	2.5	-	-	4.71	0.34	626.95	627.09	
B-01A_WYE1	B-01A_BEND1	1003.1	1+62.20	1+52.29	624.39	21.2	28.8	0.0001	1	Circular	2.5	-	-	4.21	0.27	627.09	627.17	
B-01A_BEND1	B-01A_WYE2	1003.2	1+82.16	1+62.20	624.49	21.3	29.0	0.0001	1	Circular	2.5	-	-	4.21	0.27	627.17	627.28	
B-01A_WYE2	B-01A_BEND2	1005.1	2+22.55	1+82.16	624.69	21.3	29.0	0.0001	1	Circular	2.5	-	-	4.25	0.28	627.28	627.44	
B-01A_BEND2	B-01A_BEND3	1005.2	2+79.07	2+22.55	624.97	21.4	29.0	0.0001	1	Circular	2.5	-	-	4.35	0.29	627.44	627.63	
B-01A_BEND3	B-01A_MH1.2	1005.3	2+99.45	2+79.07	625.07	21.5	29.0	0.0001	1	Circular	2.5	-	-	4.39	0.30	627.63	627.75	
B-01A_MH1.2	B-01A_MH2	1007	3+84.69	2+99.45	625.50	20.4	29.0	0.0002	1	Circular	2.5	-	-	4.63	0.33	627.75	627.99	
B-01A_MH2	B-01A_BEND4	1013.1	5+47.54	3+84.69	629.35	4.3	10.0	0.0002	1	Circular	1.5	-	-	5.26	0.43	627.99	630.05	
B-01A_BEND4	B-01A_BEND5	1013.2	5+61.53	5+47.54	629.47	4.3	10.0	0.0001	1	Circular	1.5	-	-	4.78	0.35	630.05	630.23	
B-01A_BEND5	B-01A	1013.3	5+81.24	5+61.53	629.65	4.3	10.0	0.0002	1	Circular	1.5	-	-	3.65	0.21	630.23	630.61	
LATB-01B														LATB-01B				
B-01A_MH1.2	B-01B	1006	1+29.59	1+10.00	627.20	1.3	25.2	0.0053	1	Circular	1.5	-	-	4.95	0.38	627.75	627.59	
LATB-01C														LATB-01C				
B-01E_WYE1	B-01C	1009	1+39.63	1+10.00	627.30	7.1	19.1	0.0021	1	Circular	1.5	-	-	4.41	0.30	628.99	629.16	
LATB-01D														LATB-01D				
B-01E_MH1	B-01D	1011	1+39.25	1+10.58	627.49	9.3	16.6	0.0009	1	Circular	1.5	-	-	5.33	0.44	629.22	629.97	
LATB-01E														LATB-01E				
B-01A_MH2	B-01E_WYE1	1008	2+91.36	1+00.36	626.07	16.7	12.4	0.0002	1	Circular	2	-	-	5.29	0.43	627.99	628.99	
B-01E_WYE1	B-01E_MH1	1010	3+58.61	2+91.36	626.27	11.8	12.4	0.0001	1	Circular	2	-	-	3.74	0.22	628.99	629.22	
B-01E_MH1	B-01E_BEND1	1012.1	3+88.31	3+58.61	626.93	2.6	7.7	0.0001	1	Circular	1.5	-	-	2.53	0.10	629.22	629.24	
B-01E_BEND1	B-01E	1012.2	4+02.74	3+88.31	627.01	2.5	7.7	0.0001	1	Circular	1.5	-	-	2.11	0.07	629.24	629.28	
LATB-01F														LATB-01F				
B-01A_WYE1	B-01F	1002	1+40.83	1+10.00	625.71	2.4	17.7	0.0028	1	Circular	1.5	-	-	3.60	0.20	627.09	627.12	
LATB-01H														LATB-01H				
B-01A_WYE2	B-01H	1004	1+22.85	1+11.00	627.61	0.0	49.4	0.0000	1	Circular	1.5	-	-	0.00	0.00	627.28	627.61	
LATB-02														LATB-02				
A-34_MH1	B-02	127	1+26.24	0+96.55	618.30	32.3	86.4	0.0014	1	Circular	2.5	-	-	8.88	1.22	618.54	620.12	
LATB-02.1														LATB-02.1				
B-02	B-02_BEND1	127.2	1+20.45	1+10.00	618.46	-0.5	50.3	0.0000	1	Circular	2.5	-	-	0.38	0.00	620.12	620.12	
B-02_BEND1	B-02_MH1	127.3	3+69.32	1+20.45	622.19	0.0	50.2	0.0000	1	Circular	2.5	-	-	0.00	0.00	620.12	622.19	
LINED-1														LINED-1				
A-27_MH1	A-26	116	1+07.50	0+97.85	630.28	2.1	12.2	0.0001	1	Circular	1.5	-	-	1.78	0.05	631.53	631.54	
A-26	A-27	117	1+30.00	1+07.50	630.78	1.1	15.7	0.0016	1	Circular	1.5	-	-	2.43	0.09	631.54	631.54	

HYDRAULIC GRADE LINES (HGLs) WERE CALCULATED USING XPSWMM. REFER TO THE ADDISON JUNCTION PUBLIC INFRASTRUCTURE IMPROVEMENTS –HYDROLOGIC AND HYDRAULIC ANALYSIS, PREPARED BY KIMLEY–HORN, DATED NOVEMBER 2026, FOR ADDITIONAL INFORMATION.

BY | DATE | REVISIONS | No.

PROJECT NO. C00057/ BID NO. 27–31

Kimley»Horn
225 E. JOHN W. CARPENTER FREEWAY SUITE 1100
IRVING, TX 75062
PHONE: 214-369-2300
WWW.KIMLEY-HORN.COM
© 2026 KIMLEY-HORN AND ASSOCIATES, INC.
TEXAS REGISTERED ENGINEERING FIRM #F-928

11/06/2026

STATE OF TEXAS
CAROLYN F. COX
122243
LICENSED
PROFESSIONAL ENGINEER
Carolyn Cox

KHA PROJECT 063543066
DATE 11/06/2026
SCALE AS SHOWN | DESIGNED BY KCH | DRAWN BY ZMZ | CHECKED BY FLS

ADDISON
ADDISON JUNCTION PUBLIC INFRASTRUCTURE IMPROVEMENTS

DRAINAGE CALCULATIONS
SHEET 1 OF 1

SHEET NUMBER
58

Printed By: Hall, Keegan - November 06, 2026 - 01:33:35pm G:\ACTIVE\CO\pcs\Water Main\063543066-ADDISON JUNCTION PUBLIC\Project Files\CADD\PlanSheets\DRAINAGE - CALCS.dwg
This document, together with the concepts and designs presented herein, as an instrument of service, is intended only for the specific purpose and client for which it was prepared. Reuse of and improper reliance on this document without written authorization and adaptation by Kimley-Horn and Associates, Inc. shall be without liability to Kimley-Horn and Associates, Inc.

Plotted By: Mendoza, Joseph November 06, 2026 01:37:35pm C:\ACCDocs\Kimley-Horn\063643066-ADDISON JUNCTION PUBLIC\Drainage\Plan\Sheets\DRAINAGE - SYSTEM A.dwg
This set of plans, and all incorporated details, are the property of Kimley-Horn and Associates, Inc. and are not to be used in any way without the permission of Kimley-Horn and Associates, Inc. Kimley-Horn and Associates, Inc. shall be without liability to Kimley-Horn and Associates, Inc. for any unauthorized use of these plans and documents for any purpose and any party modifying these plans and documents without the express written consent of Kimley-Horn and Associates, Inc. agrees to indemnify and hold harmless Kimley-Horn and Associates, Inc. for all claims, damages, and liabilities arising out of the modification or reuse of these plans and documents. Any electronic files transmitted with this document are intended only for the specific purposes stated in this document. Any use of these electronic files for purposes other than those intended by this document is at the sole risk of the party using or receiving the electronic files. Kimley-Horn and Associates, Inc. makes no warranties, either expressed or implied, as to any matter whatsoever, including, but not limited to, the condition of these electronic files or their fitness for any particular purpose. Any party receiving electronic files agrees to and does by its use thereof, indemnify and hold harmless Kimley-Horn and Associates, Inc. from any and all claims, liabilities, losses, damages, and costs arising out of or resulting from any changes made to these electronic files after the electronic files have left the possession of Kimley-Horn and Associates, Inc. Any party receiving electronic files shall not rely on the accuracy of any electronic files without first verifying all data contained in the electronic files by comparing them to the printed hard copies that are signed and sealed by the Engineer. Any party receiving electronic files shall not rely on the accuracy of any electronic files without first verifying all data contained in the electronic files by comparing them to the printed hard copies that are signed and sealed by the Engineer.

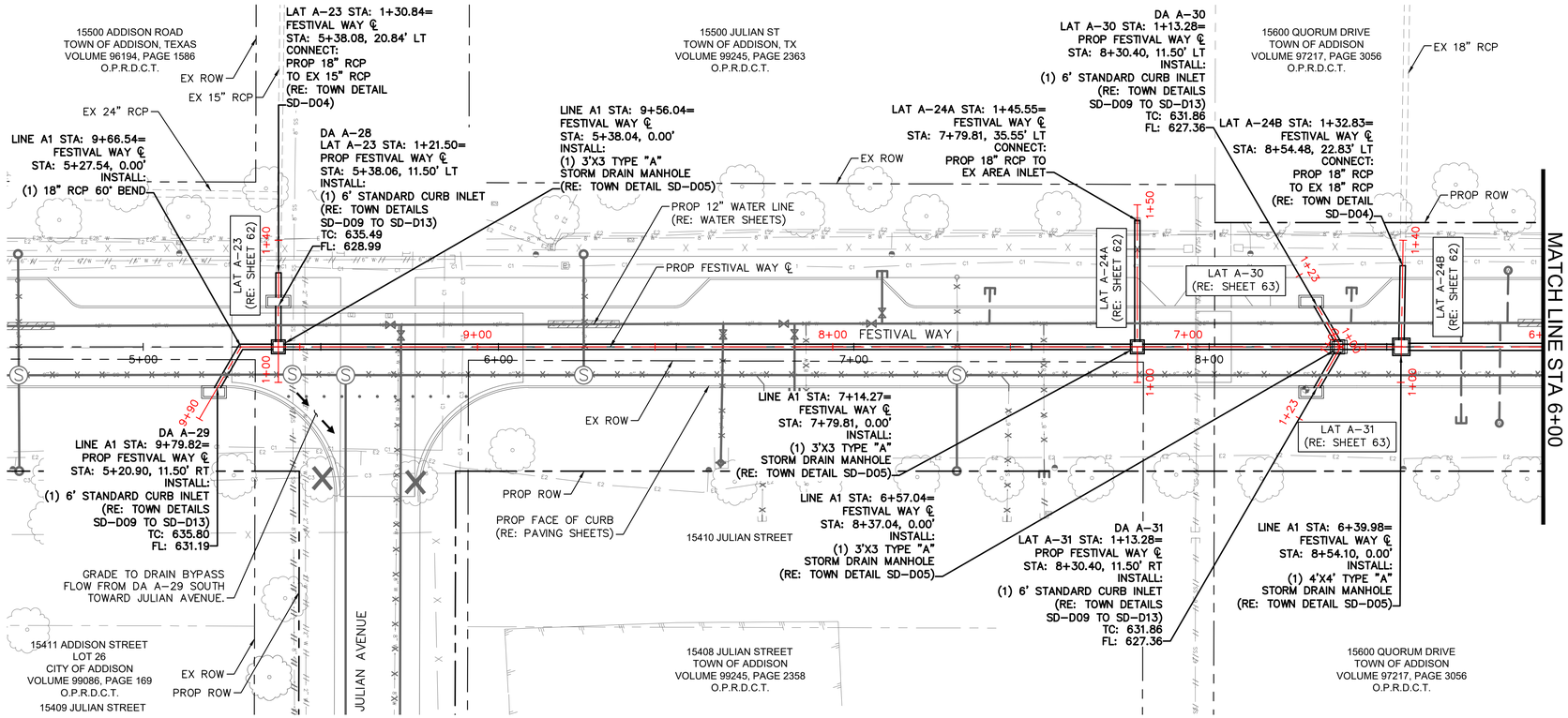

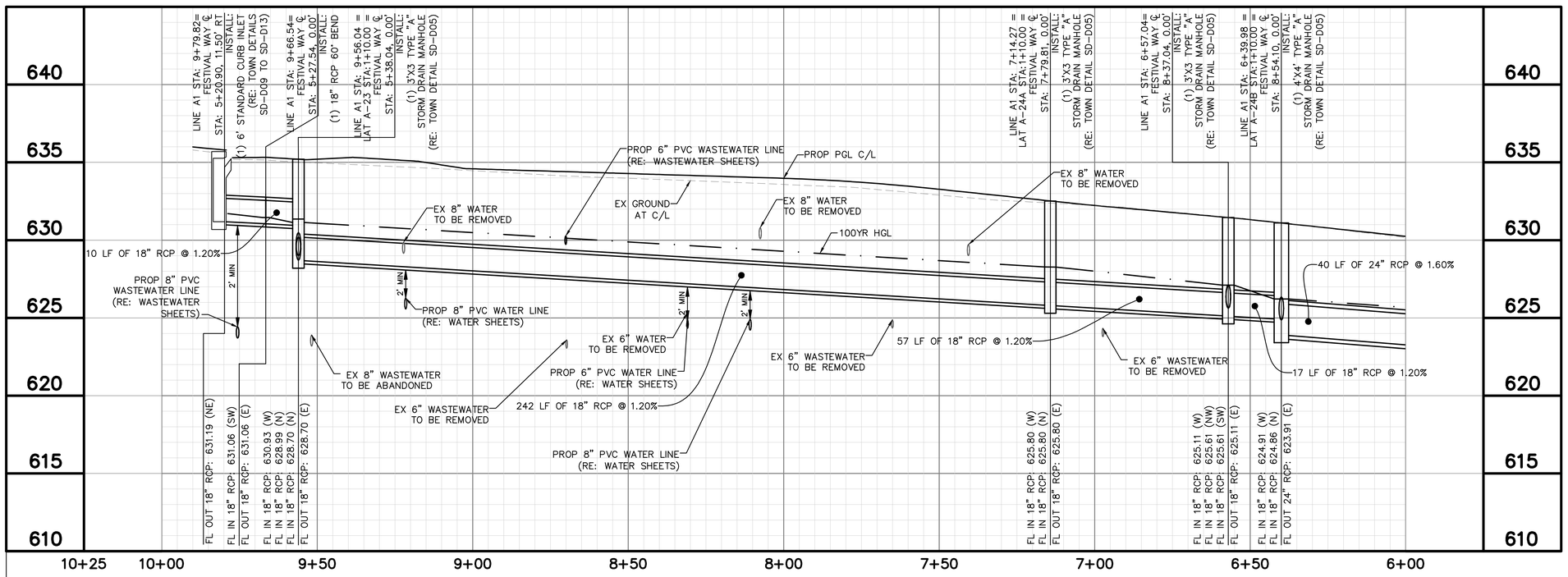

NORTH

GRAPHIC SCALE IN FEET
0 10 20 40
HORIZONTAL

0 2 4 8
VERTICAL

LEGEND

- EX ROW
- PROP ROW
- PROP EASEMENT
- 10+00 / 5+00 — STORM LINE STATION / PROP STORM DRAIN ROADWAY STATION
- PROP WASTEWATER LINE
- PROP WATER LINE
- EX 2" WATER
- EX 6" WATER
- EX 8" WATER
- EX 12" WATER
- EX 24" WATER
- EX 6" WASTEWATER
- EX 8" WASTEWATER
- EX 10" WASTEWATER
- EX 12" WASTEWATER
- EX OVERHEAD ELECTRIC
- EX ONCOR UGE
- EX TOWN OF ADDISON UGE
- EX ATT FIBER
- EX ATT TELEPHONE
- EX SPECTRUM FIBER
- EX SPECTRUM CABLE
- EX LOGIX FIBER
- EX MCI FIBER
- EX ATMOS GAS
- EX STORM LINE
- PROP STORM INLET
- PROP STORM MANHOLE
- FLOW ARROW
- EX TREE

NOTES

1. THE EXISTENCE AND LOCATIONS OF ALL UNDERGROUND UTILITIES SHOWN ON THE DRAWINGS WERE OBTAINED FROM AVAILABLE RECORDS AND ARE APPROXIMATE. NEITHER THE OWNER NOR THE ENGINEER ASSUMES ANY RESPONSIBILITY FOR UTILITIES NOT SHOWN OR NOT IN THE LOCATION SHOWN. THE CONTRACTOR SHALL DETERMINE THE DEPTH AND LOCATION OF EXISTING UNDERGROUND UTILITIES PRIOR TO EXCAVATION AND SHALL BE REQUIRED TO TAKE ANY PRECAUTIONARY MEASURES TO PROTECT ALL LINES SHOWN AND/ OR ANY OTHER UNDERGROUND UTILITIES NOT OF RECORD OR NOT SHOWN ON THE PLANS. CONTRACTOR SHALL BE RESPONSIBLE FOR CONTACTING ALL FRANCHISE AND CITY UTILITIES PRIOR TO CONSTRUCTION.
2. FOR ALL PROPOSED CONNECTIONS TO EXISTING STORM DRAINS, THE CONTRACTOR SHALL FIELD-VERIFY THE EXACT HORIZONTAL AND VERTICAL LOCATIONS AND ELEVATIONS OF THE EXISTING STORM DRAINS AND NOTIFY THE ENGINEER OF any DISCREPANCIES.

Know what's below.
Call before you dig.

No.	REVISIONS	DATE	BY

PROJECT NO. C000057/ BID NO. 27-31

Kimley»Horn
225 E. JOHN W. CARPENTER FREEWAY SUITE 1100
IRVING, TX 75062
PHONE: 214-369-2100
WWW.KIMLEY-HORN.COM
© 2026 KIMLEY-HORN AND ASSOCIATES, INC.
TEXAS REGISTERED ENGINEERING FIRM #F-928

11/06/2026
STATE OF TEXAS
CAROLYN F. COX
122243
LICENSED
PROFESSIONAL ENGINEER
Carolyn Cox

KHA PROJECT 063543066	DATE 11/06/2026	SCALE AS SHOWN	DESIGNED BY KCH	DRAWN BY ZMZ	CHECKED BY FLS

ADDISON
ADDISON JUNCTION
PUBLIC
INFRASTRUCTURE
IMPROVEMENTS

DRAINAGE
SYSTEM A
PLAN & PROFILE
LINE A1
END TO STA 6+00

SHEET NUMBER
59

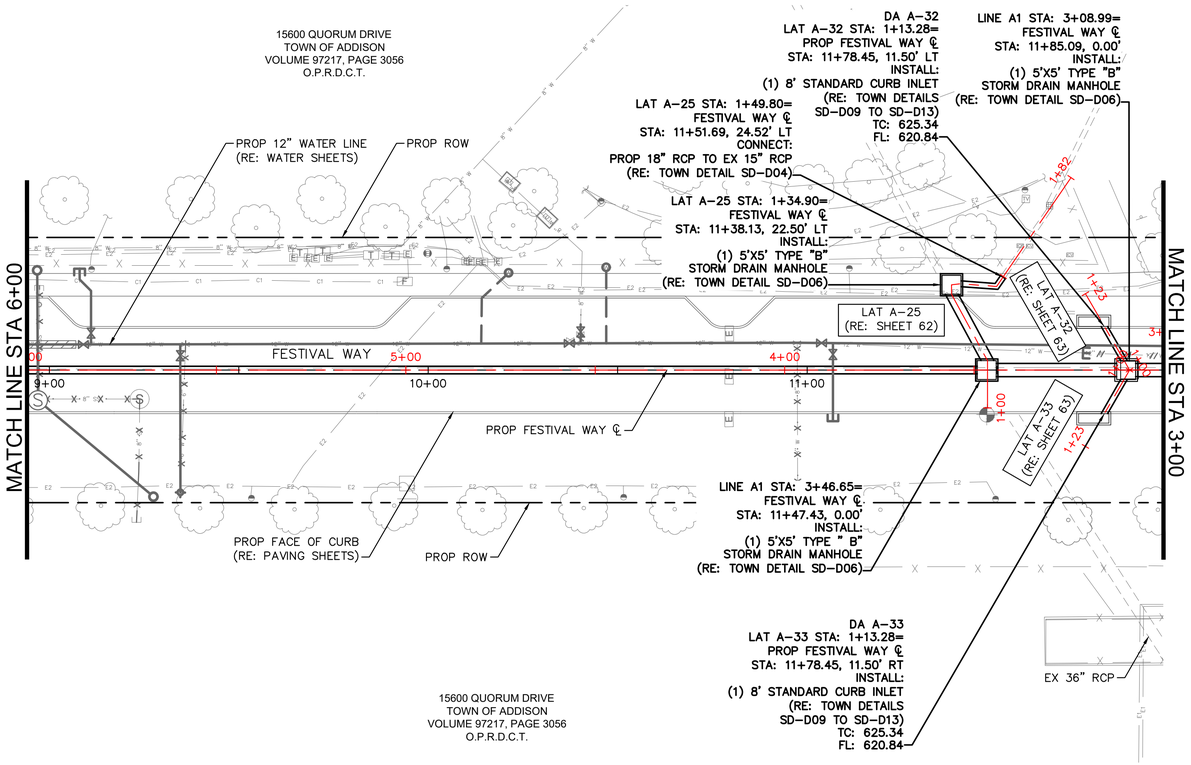

LINE A1

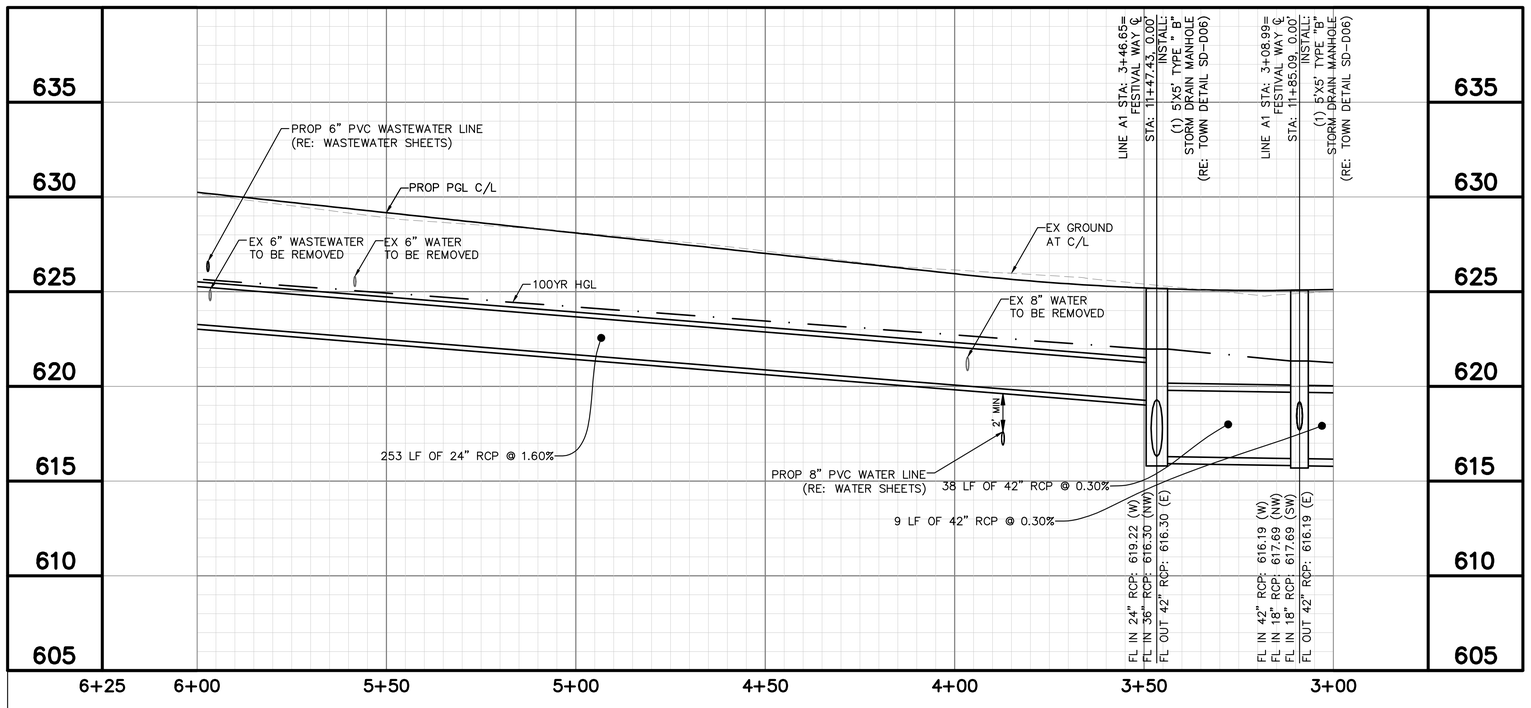



GRAPHIC SCALE IN FEET
0 10 20 40
HORIZONTAL

0 2 4 8
VERTICAL

LEGEND

- EX ROW
- PROP ROW
- PROP EASEMENT
- 10+00 / 5+00 — STORM LINE STATION / PROP STORM DRAIN / ROADWAY STATION
- PROP WASTEWATER LINE
- PROP WATER LINE
- 2" W — EX 2" WATER
- 6" W — EX 6" WATER
- 8" W — EX 8" WATER
- 12" W — EX 12" WATER
- 24" W — EX 24" WATER
- 6" SS — EX 6" WASTEWATER
- 8" SS — EX 8" WASTEWATER
- 10" SS — EX 10" WASTEWATER
- 12" SS — EX 12" WASTEWATER
- OHE — EX OVERHEAD ELECTRIC
- E1 — EX ONCOR UGE
- E2 — EX TOWN OF ADDISON UGE
- C1 — EX ATT FIBER
- C2 — EX ATT TELEPHONE
- C3 — EX SPECTRUM FIBER
- C4 — EX SPECTRUM CABLE
- C5 — EX LOGIX FIBER
- C6 — EX MCI FIBER
- G1 — EX ATMOS GAS
- EX STORM LINE
- PROP STORM INLET
- PROP STORM MANHOLE
- FLOW ARROW
- EX TREE

NOTES

1. THE EXISTENCE AND LOCATIONS OF ALL UNDERGROUND UTILITIES SHOWN ON THE DRAWINGS WERE OBTAINED FROM AVAILABLE RECORDS AND ARE APPROXIMATE. NEITHER THE OWNER NOR THE ENGINEER ASSUMES ANY RESPONSIBILITY FOR UTILITIES NOT SHOWN OR NOT IN THE LOCATION SHOWN. THE CONTRACTOR SHALL DETERMINE THE DEPTH AND LOCATION OF EXISTING UNDERGROUND UTILITIES PRIOR TO EXCAVATION AND SHALL BE REQUIRED TO TAKE ANY PRECAUTIONARY MEASURES TO PROTECT ALL LINES SHOWN AND/ OR ANY OTHER UNDERGROUND UTILITIES NOT OF RECORD OR NOT SHOWN ON THE PLANS. CONTRACTOR SHALL BE RESPONSIBLE FOR CONTACTING ALL FRANCHISE AND CITY UTILITIES PRIOR TO CONSTRUCTION.
2. FOR ALL PROPOSED CONNECTIONS TO EXISTING STORM DRAINS, THE CONTRACTOR SHALL FIELD-VERIFY THE EXACT HORIZONTAL AND VERTICAL LOCATIONS AND ELEVATIONS OF THE EXISTING STORM DRAINS AND NOTIFY THE ENGINEER OF ANY DISCREPANCIES.

811 Know what's below. Call before you dig.

No.	REVISIONS	DATE	BY

PROJECT NO. C00057/ BID NO. 27-31

Kimley»Horn
225 E. JOHN W. CARPENTER FREEWAY SUITE 1100
IRVING, TX 75062
PHONE: 214.369.6500
WWW.KIMLEY-HORN.COM
© 2026 KIMLEY-HORN AND ASSOCIATES, INC.
TEXAS REGISTERED ENGINEERING FIRM #F-928

11/06/2026
STATE OF TEXAS
CAROLYN F. COX
122243
LICENSED
PROFESSIONAL ENGINEER
Carolyn Cox

KHA PROJECT 063543066	DATE 11/06/2026		
	SCALE AS SHOWN	DESIGNED BY KCH	
		DRAWN BY ZMZ	
		CHECKED BY FLS	

ADDISON
ADDISON JUNCTION PUBLIC INFRASTRUCTURE IMPROVEMENTS

DRAINAGE SYSTEM A
PLAN & PROFILE
LINE A1
STA 6+00 TO STA 3+00

SHEET NUMBER
60

Printed By: Mercado, Joseph November 06, 2026 01:37:38pm C:\AEC\ACCDocs\Kimley-Horn\063543066-ADDISON JUNCTION PUBLIC\Sheet Files\ADDISON JUNCTION PUBLIC Sheet Files_CENTRAL@kimley-horn.com
This electronic file contains the concepts and designs presented herein, as an instrument of service, is intended only for the specific purpose and client for which it was prepared. Reuse of and improper reliance on this document without written authorization and adaptation by Kimley-Horn and Associates, Inc. shall be without liability to Kimley-Horn and Associates, Inc.

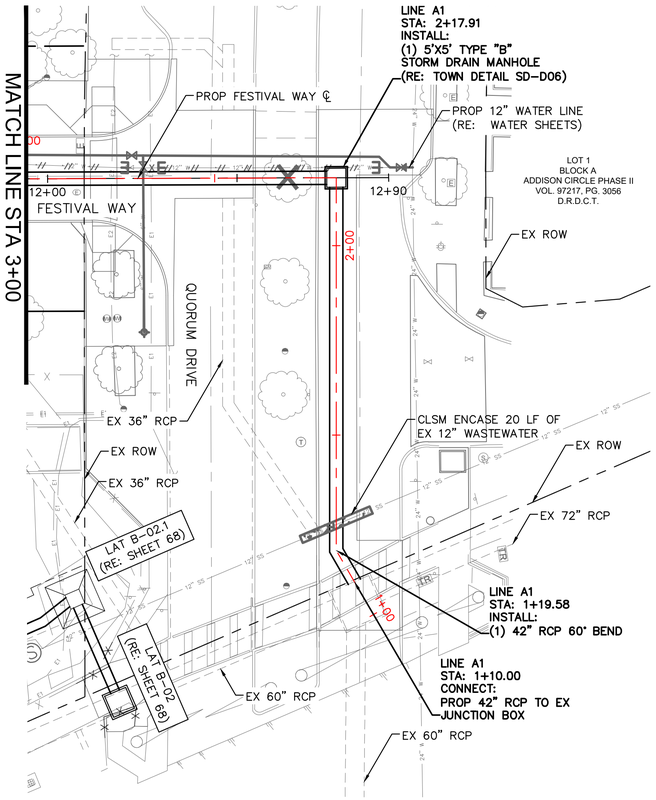

LINE A1

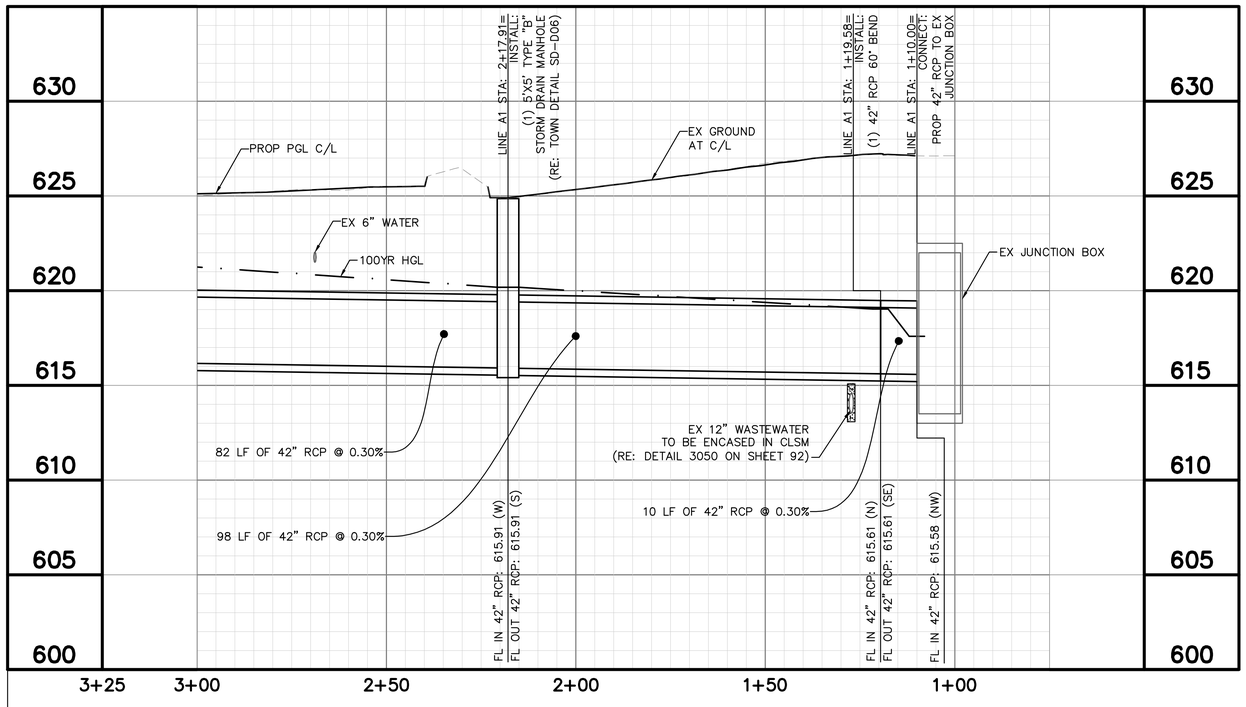

NORTH

GRAPHIC SCALE IN FEET
0 10 20 40
HORIZONTAL

0 2 4 8
VERTICAL

LEGEND

- EX ROW
- PROP ROW
- PROP EASEMENT
- 10+00 / 5+00 — STORM LINE STATION / PROP STORM DRAIN / ROADWAY STATION
- PROP WASTEWATER LINE
- PROP WATER LINE
- 2" W — EX 2" WATER
- 6" W — EX 6" WATER
- 8" W — EX 8" WATER
- 12" W — EX 12" WATER
- 24" W — EX 24" WATER
- 6" SS — EX 6" WASTEWATER
- 8" SS — EX 8" WASTEWATER
- 10" SS — EX 10" WASTEWATER
- 12" SS — EX 12" WASTEWATER
- OHE — EX OVERHEAD ELECTRIC
- E1 — EX ONCOR UGE
- E2 — EX TOWN OF ADDISON UGE
- C1 — EX ATT FIBER
- C2 — EX ATT TELEPHONE
- C3 — EX SPECTRUM FIBER
- C4 — EX SPECTRUM CABLE
- C5 — EX LOGIX FIBER
- C6 — EX MCI FIBER
- G1 — EX ATMOS GAS
- EX STORM LINE
- PROP STORM INLET
- PROP STORM MANHOLE
- FLOW ARROW
- EX TREE

NOTES

1. THE EXISTENCE AND LOCATIONS OF ALL UNDERGROUND UTILITIES SHOWN ON THE DRAWINGS WERE OBTAINED FROM AVAILABLE RECORDS AND ARE APPROXIMATE. NEITHER THE OWNER NOR THE ENGINEER ASSUMES ANY RESPONSIBILITY FOR UTILITIES NOT SHOWN OR NOT IN THE LOCATION SHOWN. THE CONTRACTOR SHALL DETERMINE THE DEPTH AND LOCATION OF EXISTING UNDERGROUND UTILITIES PRIOR TO EXCAVATION AND SHALL BE REQUIRED TO TAKE ANY PRECAUTIONARY MEASURES TO PROTECT ALL LINES SHOWN AND/ OR ANY OTHER UNDERGROUND UTILITIES NOT OF RECORD OR NOT SHOWN ON THE PLANS. CONTRACTOR SHALL BE RESPONSIBLE FOR CONTACTING ALL FRANCHISE AND CITY UTILITIES PRIOR TO CONSTRUCTION.
2. FOR ALL PROPOSED CONNECTIONS TO EXISTING STORM DRAINS, THE CONTRACTOR SHALL FIELD-VERIFY THE EXACT HORIZONTAL AND VERTICAL LOCATIONS AND ELEVATIONS OF THE EXISTING STORM DRAINS AND NOTIFY THE ENGINEER OF ANY DISCREPANCIES.

811 Know what's below. Call before you dig.

No.	REVISIONS	DATE	BY

PROJECT NO. C00057/ BID NO. 27-31

Kimley»Horn
225 E. JOHN W. CARPENTER FREEWAY SUITE 1100
IRVING, TX 75062
PHONE: 214-369-2300
WWW.KIMLEY-HORN.COM
© 2026 KIMLEY-HORN AND ASSOCIATES, INC.
TEXAS REGISTERED ENGINEERING FIRM #F-928

11/06/2026

STATE OF TEXAS
CAROLYN F. COX
122243
LICENSED
PROFESSIONAL ENGINEER
Carolyn Cox

KHA PROJECT 063543066	DATE 11/06/2026	SCALE AS SHOWN	DESIGNED BY KCH	DRAWN BY ZMZ	CHECKED BY FLS

ADDISON
ADDISON JUNCTION
PUBLIC
INFRASTRUCTURE
IMPROVEMENTS

DRAINAGE
SYSTEM A
PLAN & PROFILE
LINE A1
STA 3+00 TO BEGIN

SHEET NUMBER
61

Plotted By: Mercado, Joseph November 05, 2026 01:37:41pm G:\ACAD\ACADDocs\Water-Huron\063543066-ADDISON JUNCTION PUBLIC\Draft-Files\ACADDocs\Sheets\DRAINAGE SYSTEM A PLAN & PROFILE LINE A1 STA 3+00 TO BEGIN.dwg
This document, together with the concepts and designs presented herein, as an instrument of service, is intended only for the specific purpose and client for which it was prepared. Reuse of and improper reliance on this document without written authorization and adaptation by Kimley-Horn and Associates, Inc. shall be without liability to Kimley-Horn and Associates, Inc.

Plotted By: Mendoza, Joseph November 06, 2026 01:37:45pm G:\ASC\ASCDocs\Valley Horn\063643566-ADDISON JUNCTION PUBLIC\Drawings\Plan\ADDISON JunctionSheets\DRAINAGE - SYSTEM A.dwg
This set and each sheet, item, detail, or design presented thereon, is an instrument of service prepared by Kimley-Horn and Associates, Inc. and is intended only for the specific purpose and client for which it was prepared. Reuse of and improper reliance on this document without written authorization and adaptation by Kimley-Horn and Associates, Inc. shall be without liability to Kimley-Horn and Associates, Inc.

LAT A-23

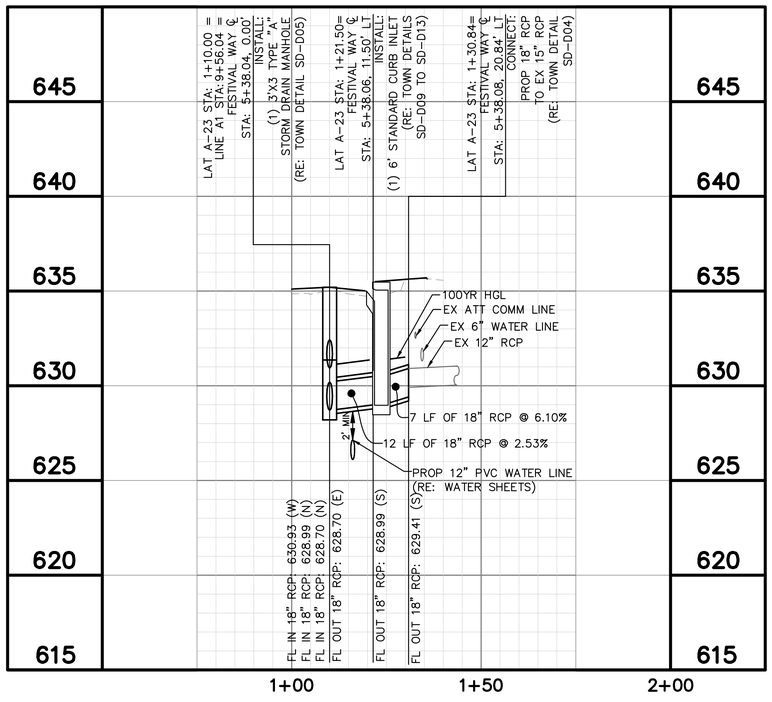

LAT A-24A

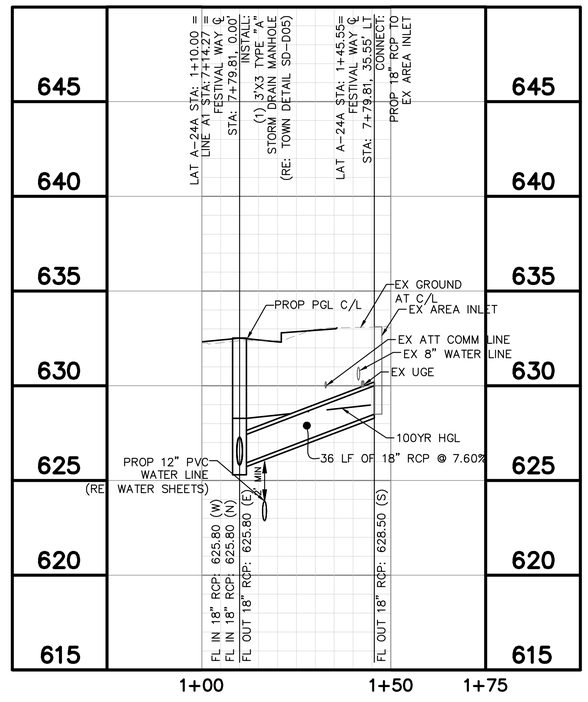

LAT A-24B

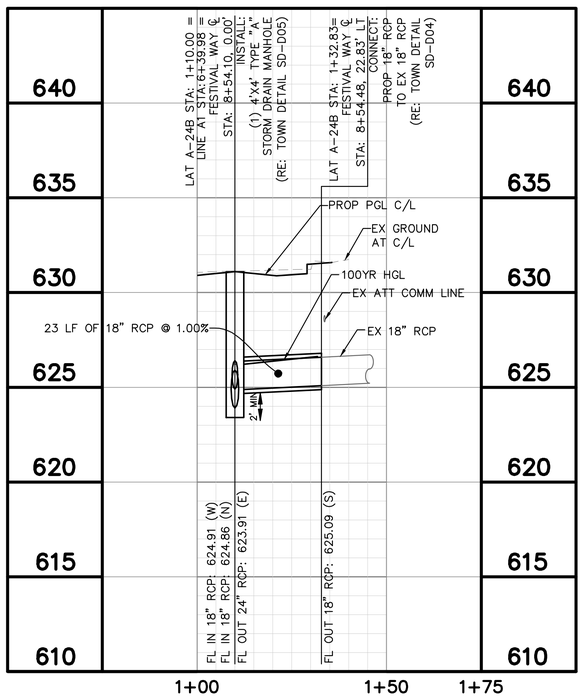

LAT A-25

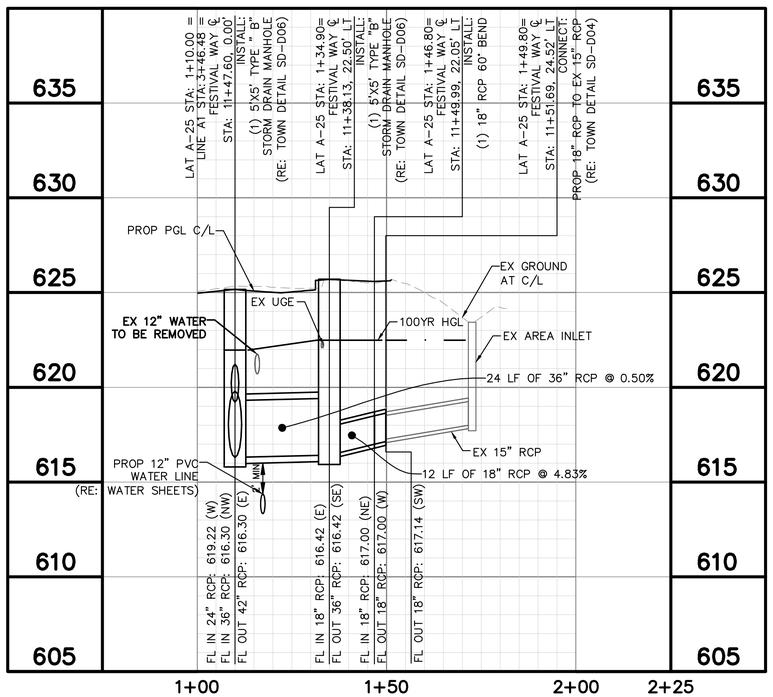

GRAPHIC SCALE IN FEET
0 10 20 40
HORIZONTAL

0 2 4 8
VERTICAL

LEGEND

- EX ROW
- PROP ROW
- PROP EASEMENT
- STORM LINE STATION 10+00 / PROP STORM DRAIN ROADWAY STATION 5+00
- PROP WASTEWATER LINE
- PROP WATER LINE
- EX 2" WATER
- EX 6" WATER
- EX 8" WATER
- EX 12" WATER
- EX 24" WATER
- EX 6" WASTEWATER
- EX 8" WASTEWATER
- EX 10" WASTEWATER
- EX 12" WASTEWATER
- EX OVERHEAD ELECTRIC
- EX ONCOR UGE
- EX TOWN OF ADDISON UGE
- EX ATT FIBER
- EX ATT TELEPHONE
- EX SPECTRUM FIBER
- EX SPECTRUM CABLE
- EX LOGIX FIBER
- EX MCI FIBER
- EX ATMOS GAS
- EX STORM LINE
- PROP STORM INLET
- PROP STORM MANHOLE
- FLOW ARROW
- EX TREE

NOTES

1. THE EXISTENCE AND LOCATIONS OF ALL UNDERGROUND UTILITIES SHOWN ON THE DRAWINGS WERE OBTAINED FROM AVAILABLE RECORDS AND ARE APPROXIMATE. NEITHER THE OWNER NOR THE ENGINEER ASSUMES ANY RESPONSIBILITY FOR UTILITIES NOT SHOWN OR NOT IN THE LOCATION SHOWN. THE CONTRACTOR SHALL DETERMINE THE DEPTH AND LOCATION OF EXISTING UNDERGROUND UTILITIES PRIOR TO EXCAVATION AND SHALL BE REQUIRED TO TAKE ANY PRECAUTIONARY MEASURES TO PROTECT ALL LINES SHOWN AND/ OR ANY OTHER UNDERGROUND UTILITIES NOT OF RECORD OR NOT SHOWN ON THE PLANS. CONTRACTOR SHALL BE RESPONSIBLE FOR CONTACTING ALL FRANCHISE AND CITY UTILITIES PRIOR TO CONSTRUCTION.
2. FOR ALL PROPOSED CONNECTIONS TO EXISTING STORM DRAINS, THE CONTRACTOR SHALL FIELD-VERIFY THE EXACT HORIZONTAL AND VERTICAL LOCATIONS AND ELEVATIONS OF THE EXISTING STORM DRAINS AND NOTIFY THE ENGINEER OF ANY DISCREPANCIES.

811 Know what's below. Call before you dig.

No.	REVISIONS	DATE	BY

PROJECT NO. C00057/ BID NO. 27-31

Kimley»Horn
225 E. JOHN W. CARPENTER FREEWAY SUITE 1100
IRVING, TX 75062
PHONE: 214.369.6500
WWW.KIMLEY-HORN.COM
© 2026 KIMLEY-HORN AND ASSOCIATES, INC.
TEXAS REGISTERED ENGINEERING FIRM #F-928

11/06/2026

STATE OF TEXAS
CAROLYN F. COX
122243
LICENSED
PROFESSIONAL ENGINEER
Carolyn Cox

KHA PROJECT 063543066	DATE 11/06/2026	SCALE AS SHOWN	DESIGNED BY KCH	DRAWN BY ZMZ	CHECKED BY FLS

ADDISON
ADDISON JUNCTION
PUBLIC
INFRASTRUCTURE
IMPROVEMENTS

DRAINAGE
LATERALS
LINE A1 LATERALS

SHEET NUMBER
62

LAT A–30

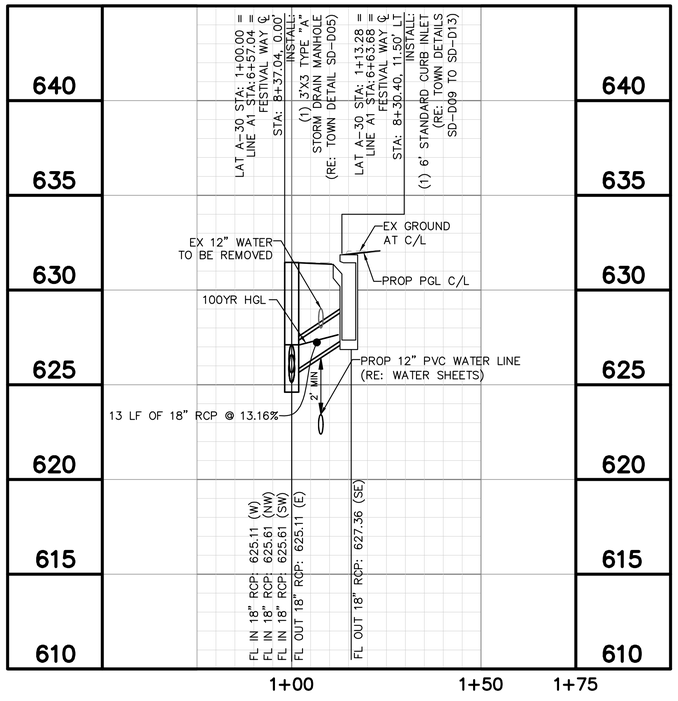

LAT A–31

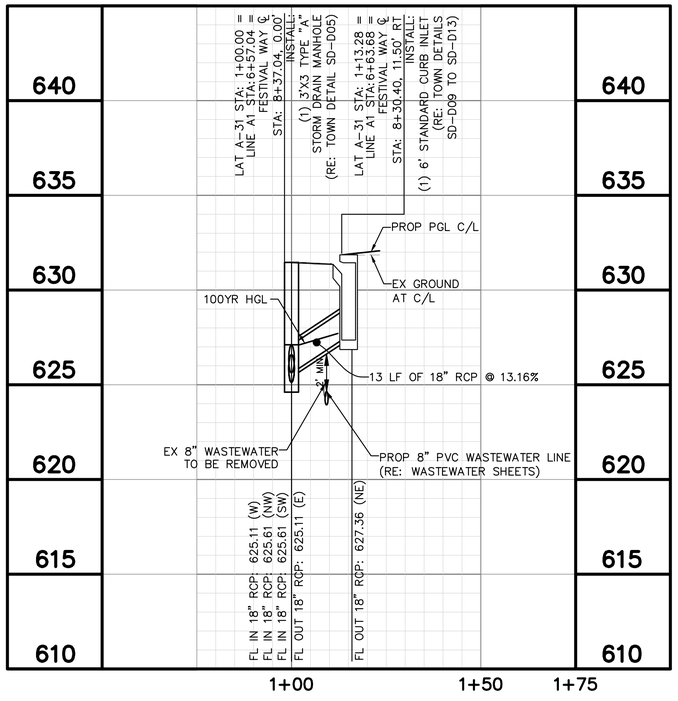

LAT A–32

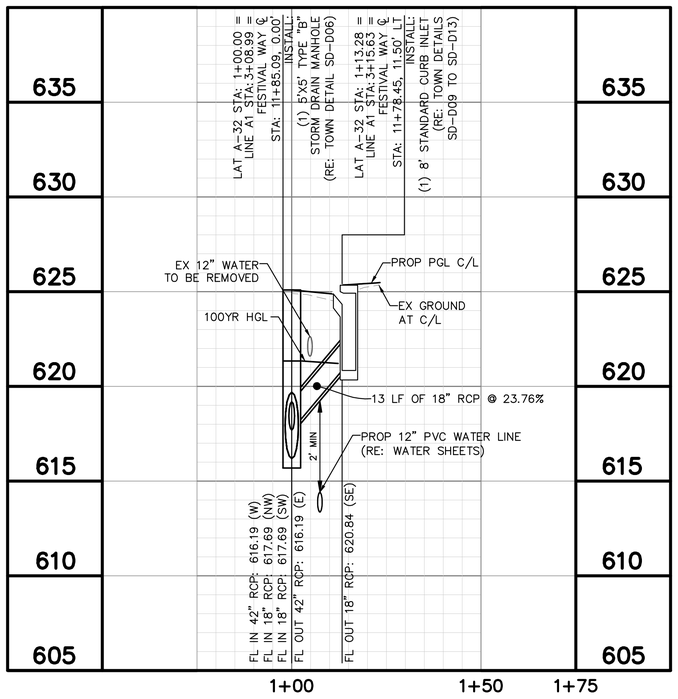

LAT A–33

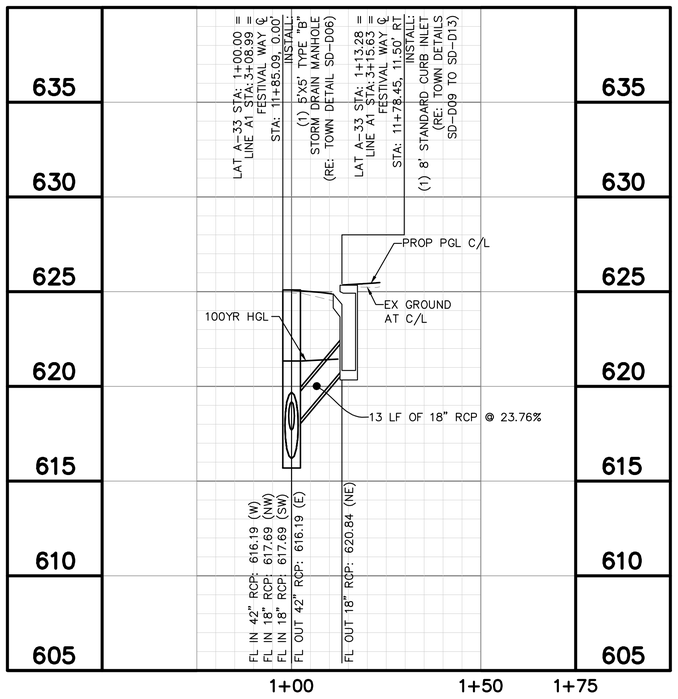

GRAPHIC SCALE IN FEET
0 10 20 40
HORIZONTAL

0 2 4 8
VERTICAL

LEGEND

- EX ROW
- PROP ROW
- PROP EASEMENT
- 10+00 STORM LINE STATION
- PROP STORM DRAIN
- 5+00 ROADWAY STATION
- PROP WASTEWATER LINE
- PROP WATER LINE
- 2" W EX 2" WATER
- 6" W EX 6" WATER
- 8" W EX 8" WATER
- 12" W EX 12" WATER
- 24" W EX 24" WATER
- 6" SS EX 6" WASTEWATER
- 8" SS EX 8" WASTEWATER
- 10" SS EX 10" WASTEWATER
- 12" SS EX 12" WASTEWATER
- OHE EX OVERHEAD ELECTRIC
- E1 EX ONCOR UGE
- E2 EX TOWN OF ADDISON UGE
- C1 EX ATT FIBER
- C2 EX ATT TELEPHONE
- C3 EX SPECTRUM FIBER
- C4 EX SPECTRUM CABLE
- C5 EX LOGIX FIBER
- C6 EX MCI FIBER
- G1 EX ATMOS GAS
- EX STORM LINE
- PROP STORM INLET
- PROP STORM MANHOLE
- FLOW ARROW
- EX TREE

NOTES

1. THE EXISTENCE AND LOCATIONS OF ALL UNDERGROUND UTILITIES SHOWN ON THE DRAWINGS WERE OBTAINED FROM AVAILABLE RECORDS AND ARE APPROXIMATE. NEITHER THE OWNER NOR THE ENGINEER ASSUMES ANY RESPONSIBILITY FOR UTILITIES NOT SHOWN OR NOT IN THE LOCATION SHOWN. THE CONTRACTOR SHALL DETERMINE THE DEPTH AND LOCATION OF EXISTING UNDERGROUND UTILITIES PRIOR TO EXCAVATION AND SHALL BE REQUIRED TO TAKE ANY PRECAUTIONARY MEASURES TO PROTECT ALL LINES SHOWN AND/ OR ANY OTHER UNDERGROUND UTILITIES NOT OF RECORD OR NOT SHOWN ON THE PLANS. CONTRACTOR SHALL BE RESPONSIBLE FOR CONTACTING ALL FRANCHISE AND CITY UTILITIES PRIOR TO CONSTRUCTION.
2. FOR ALL PROPOSED CONNECTIONS TO EXISTING STORM DRAINS, THE CONTRACTOR SHALL FIELD-VERIFY THE EXACT HORIZONTAL AND VERTICAL LOCATIONS AND ELEVATIONS OF THE EXISTING STORM DRAINS AND NOTIFY THE ENGINEER OF ANY DISCREPANCIES.

811 Know what's below. Call before you dig.

No.	REVISIONS	DATE	BY

PROJECT NO. C00057/ BID NO. 27-31

Kimley»Horn
225 E. JOHN W. CARPENTER FREEWAY SUITE 1100
IRVING, TX 75062
PHONE: 214.369.6500
WWW.KIMLEY-HORN.COM

© 2026 KIMLEY-HORN AND ASSOCIATES, INC.

TEXAS REGISTERED ENGINEERING FIRM #F-928

11/06/2026

STATE OF TEXAS
CAROLYN F. COX
122243
LICENSED
PROFESSIONAL ENGINEER
Carolyn Cox

KHA PROJECT 063543066	DATE 11/06/2026	SCALE AS SHOWN	DESIGNED BY KCH	DRAWN BY ZMZ	CHECKED BY FLS

ADDISON
ADDISON JUNCTION PUBLIC INFRASTRUCTURE IMPROVEMENTS

DRAINAGE
LATERALS
LINE A1 LATERALS

SHEET NUMBER
63

Plotted By: Mercado, Joseph November 06, 2026 01:37:48pm G:\AC\ACCDocs\Kimley-Horn\063543066-ADDISON JUNCTION PUBLIC\Drawing Sheets\DRAINAGE - SYSTEM A.dwg
This set and/or media contains some design presented herein, as an instrument of service, is intended only for the specific purpose and client for which it was prepared. Reuse of and improper reliance on this document without written authorization and adaptation by Kimley-Horn and Associates, Inc. shall be without liability to Kimley-Horn and Associates, Inc.

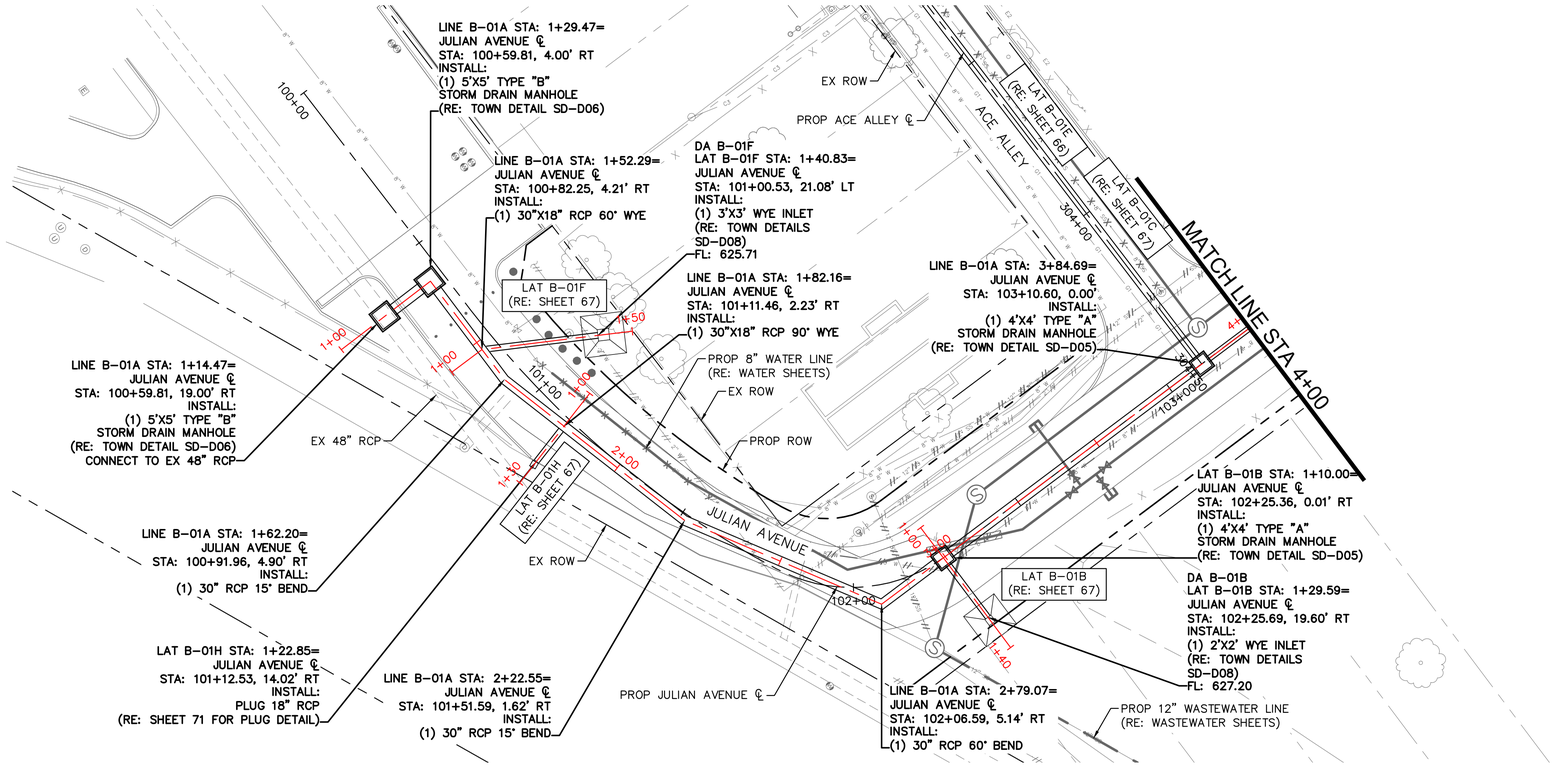

GRAPHIC SCALE IN FEET
0 10 20 40
HORIZONTAL

0 2 4 8
VERTICAL

LEGEND

- EX ROW
- PROP ROW
- PROP EASEMENT
- 10+00 / 5+00 — STORM LINE STATION / PROP STORM DRAIN / ROADWAY STATION
- PROP WASTEWATER LINE
- PROP WATER LINE
- EX 2" WATER
- EX 6" WATER
- EX 8" WATER
- EX 12" WATER
- EX 24" WATER
- EX 6" WASTEWATER
- EX 8" WASTEWATER
- EX 10" WASTEWATER
- EX 12" WASTEWATER
- EX OVERHEAD ELECTRIC
- EX ONCOR UGE
- EX TOWN OF ADDISON UGE
- EX ATT FIBER
- EX ATT TELEPHONE
- EX SPECTRUM FIBER
- EX SPECTRUM CABLE
- EX LOGIX FIBER
- EX MCI FIBER
- EX ATMOS GAS
- EX STORM LINE
- PROP STORM INLET
- PROP STORM MANHOLE
- FLOW ARROW
- EX TREE

NOTES

1. THE EXISTENCE AND LOCATIONS OF ALL UNDERGROUND UTILITIES SHOWN ON THE DRAWINGS WERE OBTAINED FROM AVAILABLE RECORDS AND ARE APPROXIMATE. NEITHER THE OWNER NOR THE ENGINEER ASSUMES ANY RESPONSIBILITY FOR UTILITIES NOT SHOWN OR NOT IN THE LOCATION SHOWN. THE CONTRACTOR SHALL DETERMINE THE DEPTH AND LOCATION OF EXISTING UNDERGROUND UTILITIES PRIOR TO EXCAVATION AND SHALL BE REQUIRED TO TAKE ANY PRECAUTIONARY MEASURES TO PROTECT ALL LINES SHOWN AND/ OR ANY OTHER UNDERGROUND UTILITIES NOT OF RECORD OR NOT SHOWN ON THE PLANS. CONTRACTOR SHALL BE RESPONSIBLE FOR CONTACTING ALL FRANCHISE AND CITY UTILITIES PRIOR TO CONSTRUCTION.
2. FOR ALL PROPOSED CONNECTIONS TO EXISTING STORM DRAINS, THE CONTRACTOR SHALL FIELD-VERIFY THE EXACT HORIZONTAL AND VERTICAL LOCATIONS AND ELEVATIONS OF THE EXISTING STORM DRAINS AND NOTIFY THE ENGINEER OF ANY DISCREPANCIES.

LINE B-01A

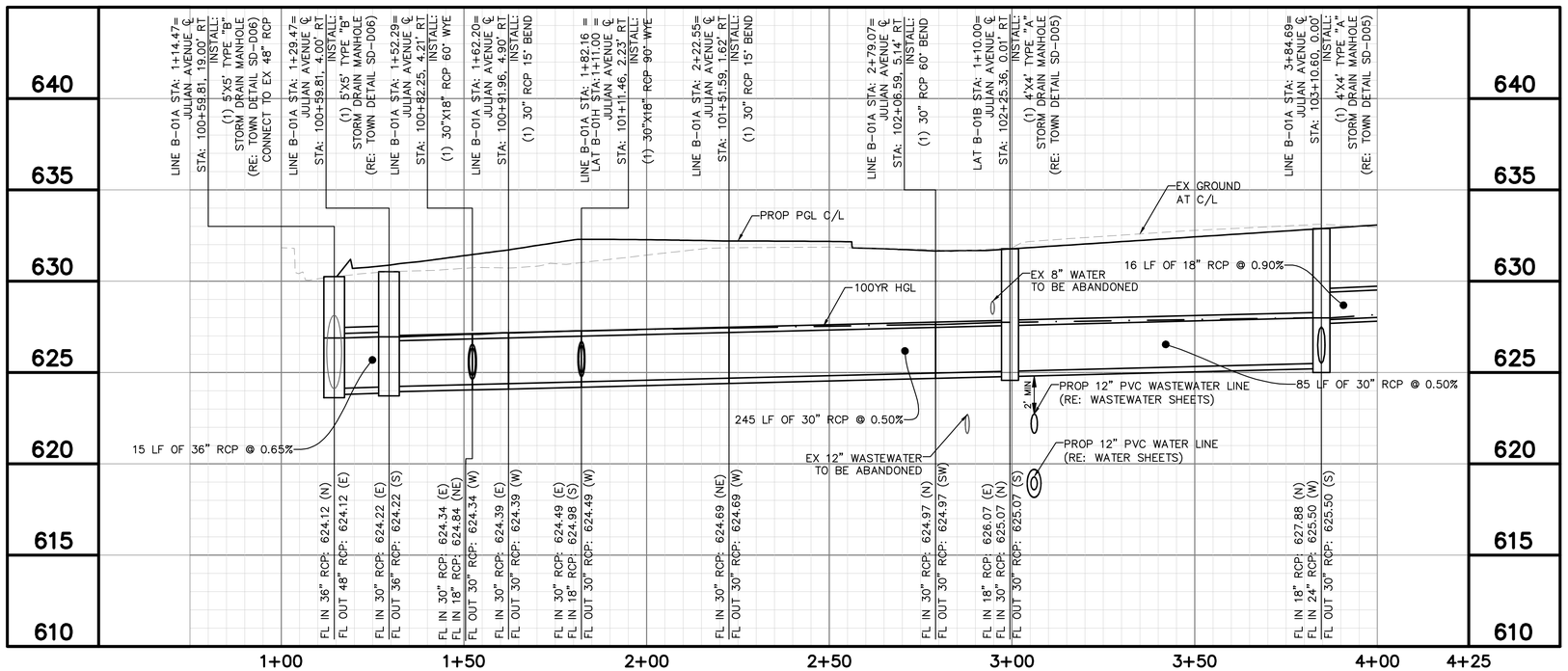

PROJECT NO. C00057/ BID NO. 27-31

No.	REVISIONS	DATE	BY

Kimley»Horn
225 E. JOHN W. CARPENTER FREEWAY SUITE 1100
IRVING, TX 75063
PHONE: 214-565-0660
WWW.KIMLEY-HORN.COM
© 2026 KIMLEY-HORN AND ASSOCIATES, INC.
TEXAS REGISTERED ENGINEERING FIRM #F-928

11/06/2026
STATE OF TEXAS
CAROLYN F. COX
122243
LICENSED
PROFESSIONAL ENGINEER
Carolyn Cox

KHA PROJECT 063543066
DATE 11/06/2026
SCALE AS SHOWN | DESIGNED BY KCH | DRAWN BY ZMZ | CHECKED BY FLS

ADDISON
ADDISON JUNCTION PUBLIC INFRASTRUCTURE IMPROVEMENTS

DRAINAGE SYSTEM B
PLAN & PROFILE
LINE B-01A
BEGIN TO STA 4+00

SHEET NUMBER
64

Printed By: Mendoza, Joseph November 06, 2026 01:38:02pm C:\AECOM\ACCDocs\Kimley-Horn\063543066-ADDISON JUNCTION PUBLIC\Project Files\CAD\PlanSheets\DRAINAGE SYSTEM B AND C.dwg
This set and all information contained on the electronic files is the property of Kimley-Horn and Associates, Inc. and shall be without liability to Kimley-Horn and Associates, Inc. for any unauthorized use or modification. This document is not to be used for any other project, and is not to be assigned to any third party without the prior written consent of Kimley-Horn and Associates, Inc. This document is not intended or represented to be suitable for reuse by others on extensions of this project or on any other project. Any reuse without written verification or adaptation by Kimley-Horn and Associates, Inc. shall be without liability to Kimley-Horn and Associates, Inc. Any such verification or adaptation will entitle Kimley-Horn and Associates, Inc. to compensation sufficient to indemnify it against any loss, expense or liability resulting therefrom. This document is intended only for the specific purpose and client for which it was prepared. Reuse of and improper reliance on this document without written authorization and adaptation by Kimley-Horn and Associates, Inc. shall be without liability to Kimley-Horn and Associates, Inc.

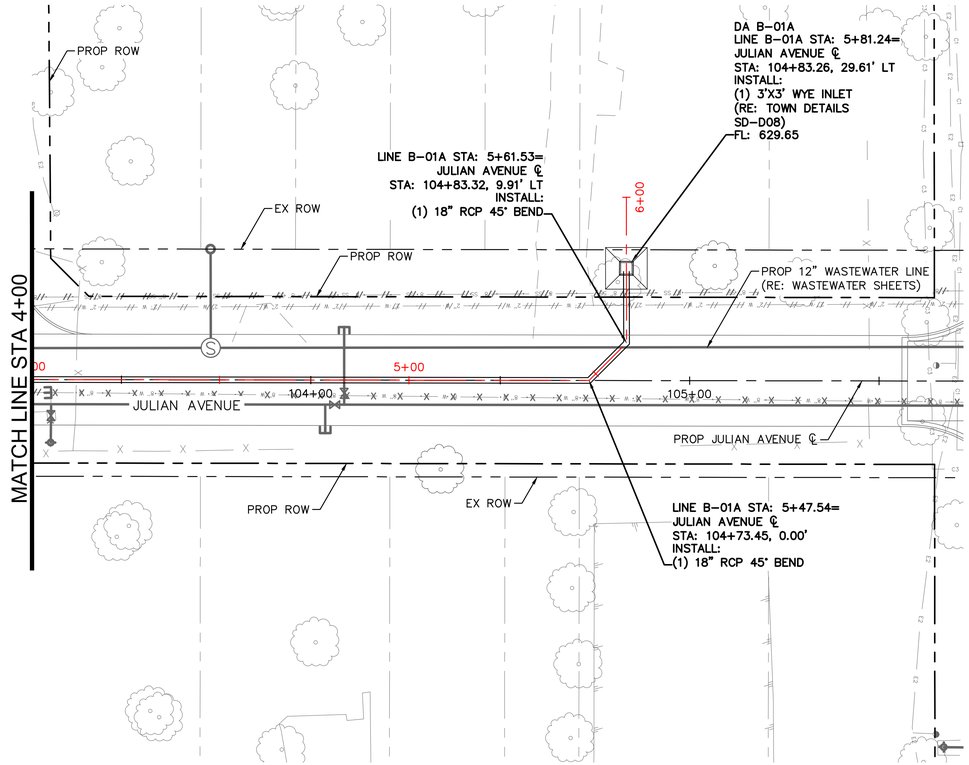

LINE B-01A

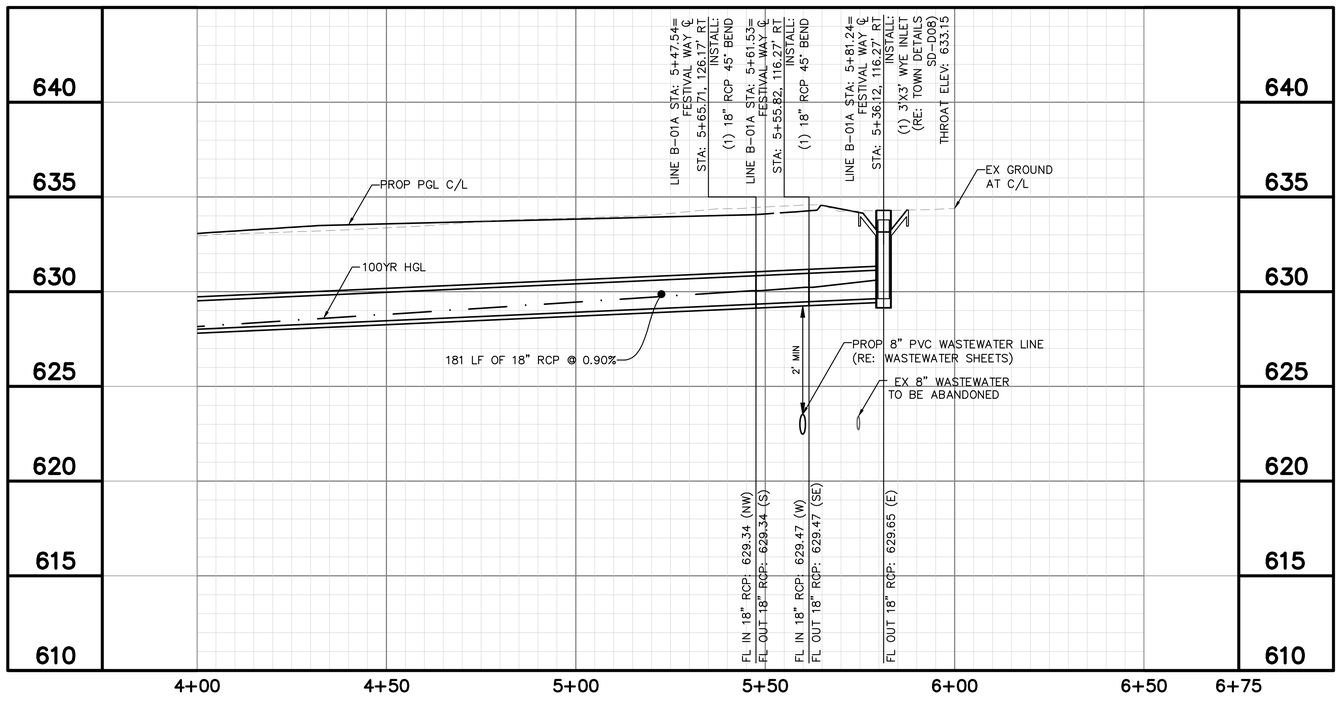



GRAPHIC SCALE IN FEET
0 10 20 40
HORIZONTAL

0 2 4 8
VERTICAL

LEGEND

- EX ROW
- PROP ROW
- PROP EASEMENT
- 10+00 / 5+00 — STORM LINE STATION / PROP STORM DRAIN / ROADWAY STATION
- PROP WASTEWATER LINE
- PROP WATER LINE
- 2"W — EX 2" WATER
- 6"W — EX 6" WATER
- 8"W — EX 8" WATER
- 12"W — EX 12" WATER
- 24"W — EX 24" WATER
- 6"SS — EX 6" WASTEWATER
- 8"SS — EX 8" WASTEWATER
- 10"SS — EX 10" WASTEWATER
- 12"SS — EX 12" WASTEWATER
- OHE — EX OVERHEAD ELECTRIC
- E1 — EX ONCOR UGE
- E2 — EX TOWN OF ADDISON UGE
- C1 — EX ATT FIBER
- C2 — EX ATT TELEPHONE
- C3 — EX SPECTRUM FIBER
- C4 — EX SPECTRUM CABLE
- C5 — EX LOGIX FIBER
- C6 — EX MCI FIBER
- G1 — EX ATMOS GAS
- EX STORM LINE
- PROP STORM INLET
- PROP STORM MANHOLE
- FLOW ARROW
- EX TREE

NOTES

1. THE EXISTENCE AND LOCATIONS OF ALL UNDERGROUND UTILITIES SHOWN ON THE DRAWINGS WERE OBTAINED FROM AVAILABLE RECORDS AND ARE APPROXIMATE. NEITHER THE OWNER NOR THE ENGINEER ASSUMES ANY RESPONSIBILITY FOR UTILITIES NOT SHOWN OR NOT IN THE LOCATION SHOWN. THE CONTRACTOR SHALL DETERMINE THE DEPTH AND LOCATION OF EXISTING UNDERGROUND UTILITIES PRIOR TO EXCAVATION AND SHALL BE REQUIRED TO TAKE ANY PRECAUTIONARY MEASURES TO PROTECT ALL LINES SHOWN AND/ OR ANY OTHER UNDERGROUND UTILITIES NOT OF RECORD OR NOT SHOWN ON THE PLANS. CONTRACTOR SHALL BE RESPONSIBLE FOR CONTACTING ALL FRANCHISE AND CITY UTILITIES PRIOR TO CONSTRUCTION.
2. FOR ALL PROPOSED CONNECTIONS TO EXISTING STORM DRAINS, THE CONTRACTOR SHALL FIELD-VERIFY THE EXACT HORIZONTAL AND VERTICAL LOCATIONS AND ELEVATIONS OF THE EXISTING STORM DRAINS AND NOTIFY THE ENGINEER OF ANY DISCREPANCIES.

No.	REVISIONS	DATE	BY

PROJECT NO. C00057/ BID NO. 27-31

Kimley»Horn
225 E. JOHN W. CARPENTER FREEWAY SUITE 1100
IRVING, TX 75062
PHONE: 214.369.6500
WWW.KIMLEY-HORN.COM
© 2026 KIMLEY-HORN AND ASSOCIATES, INC.
TEXAS REGISTERED ENGINEERING FIRM #F-928

11/06/2026

STATE OF TEXAS
CAROLYN F. COX
122243
LICENSED
PROFESSIONAL ENGINEER
Carolyn Cox

KHA PROJECT			
063543066	DATE	11/06/2026	
	SCALE	AS SHOWN	
	DESIGNED BY	KCH	
	DRAWN BY	ZMZ	
	CHECKED BY	FLS	

ADDISON
ADDISON JUNCTION PUBLIC INFRASTRUCTURE IMPROVEMENTS

DRAINAGE SYSTEM B
PLAN & PROFILE
LINE B-01A
STA 4+00 TO END

SHEET NUMBER
65

Printed By: Mendoza, Joseph November 06, 2026 01:38:03pm G:\AECOM\Projects\Kimley-Horn\063543066-ADDISON JUNCTION PUBLIC\Drngs\ Files\ADDISON PUBLIC\Drngs\DRAINAGE - SYSTEM B AND C.dwg
This set and all plans, specifications, and designs presented hereon, as an instrument of service, is and shall remain the property of Kimley-Horn and Associates, Inc. and is not to be used in whole or in part, and is not to be disclosed to or discussed with any unauthorized person without the express written permission of Kimley-Horn and Associates, Inc. Reuse of and improper reliance on this document without written authorization and adaptation by Kimley-Horn and Associates, Inc. shall be without liability to Kimley-Horn and Associates, Inc.

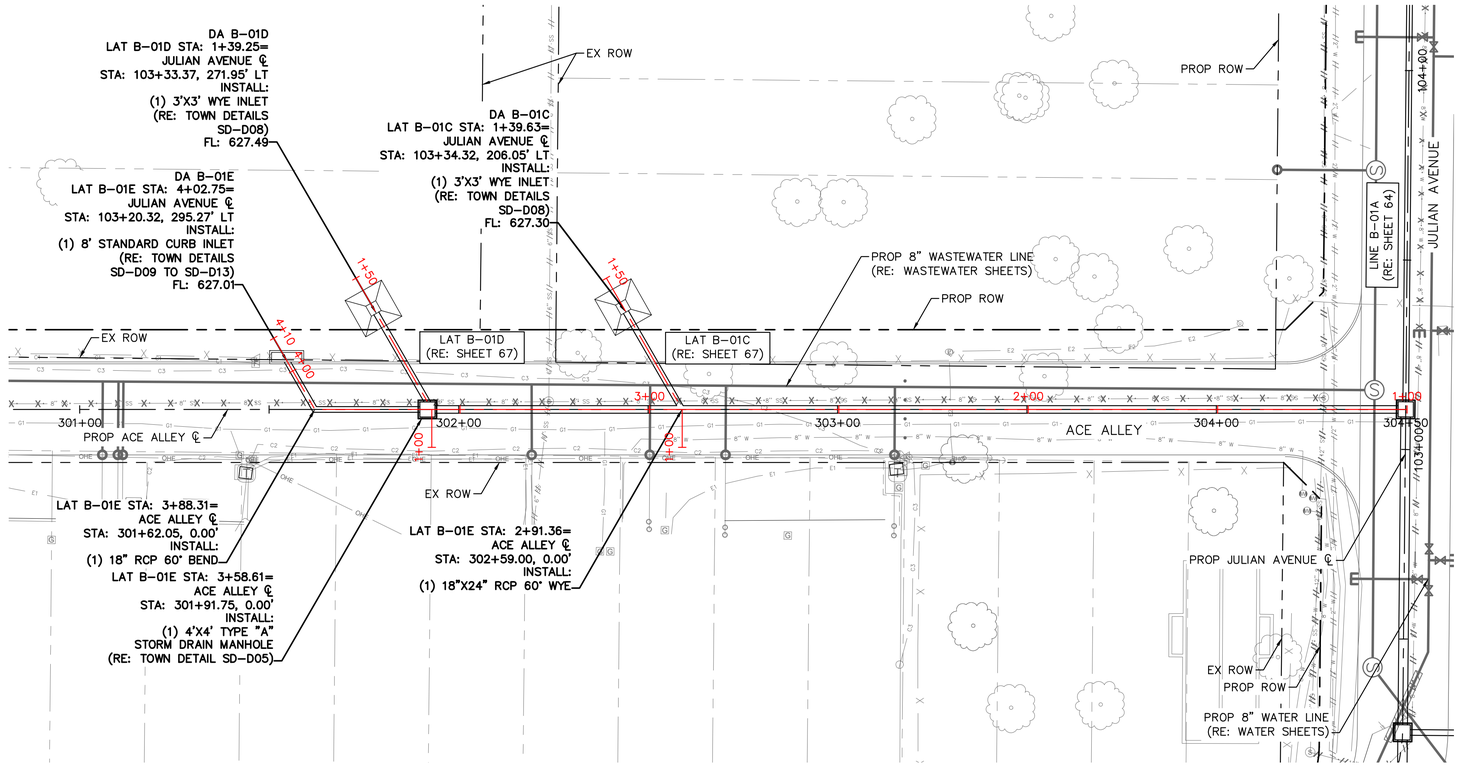

LAT B-01E

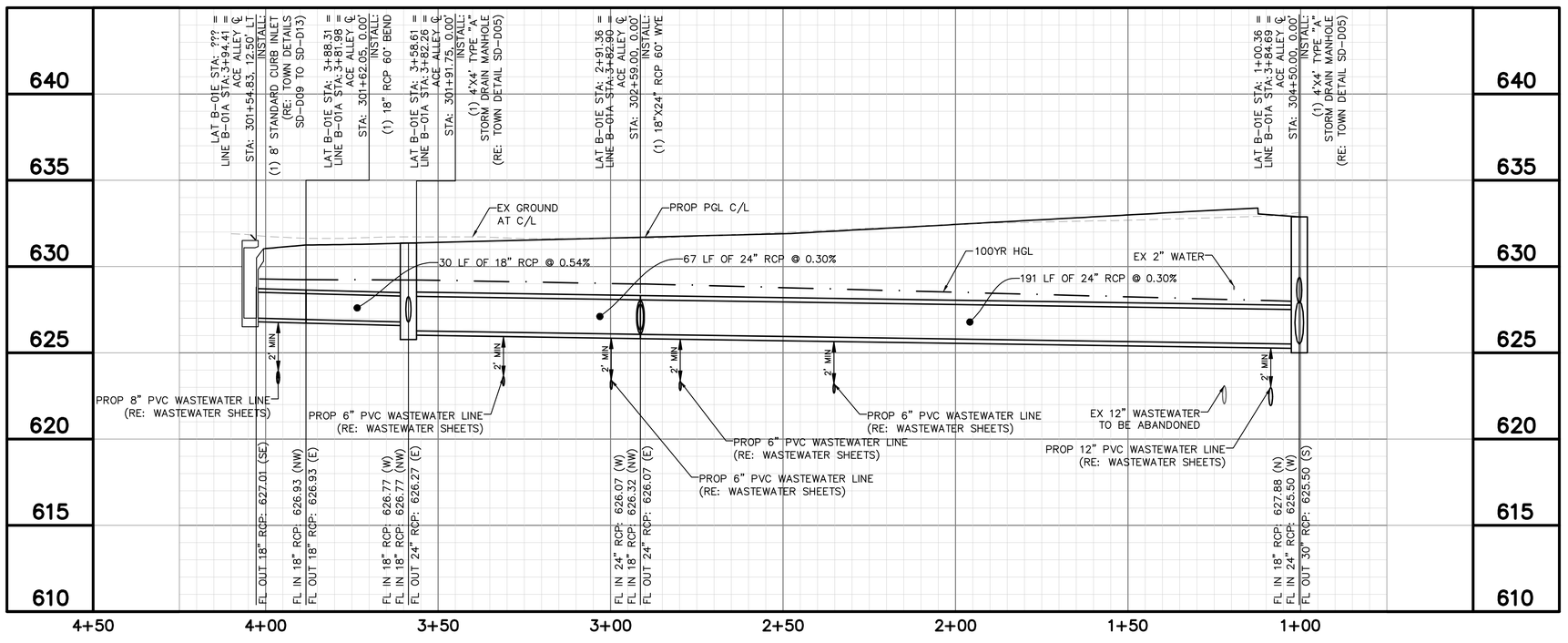



GRAPHIC SCALE IN FEET
0 10 20 40
HORIZONTAL

0 2 4 8
VERTICAL

LEGEND

- EX ROW
- PROP ROW
- PROP EASEMENT
- 10+00 / 5+00 — STORM LINE STATION / PROP STORM DRAIN / ROADWAY STATION
- PROP WASTEWATER LINE
- PROP WATER LINE
- 2" W — EX 2" WATER
- 6" W — EX 6" WATER
- 8" W — EX 8" WATER
- 12" W — EX 12" WATER
- 24" W — EX 24" WATER
- 6" SS — EX 6" WASTEWATER
- 8" SS — EX 8" WASTEWATER
- 10" SS — EX 10" WASTEWATER
- 12" SS — EX 12" WASTEWATER
- OHE — EX OVERHEAD ELECTRIC
- E1 — EX ONCOR UGE
- E2 — EX TOWN OF ADDISON UGE
- C1 — EX ATT FIBER
- C2 — EX ATT TELEPHONE
- C3 — EX SPECTRUM FIBER
- C4 — EX SPECTRUM CABLE
- C5 — EX LOGIX FIBER
- C6 — EX MCI FIBER
- G1 — EX ATMOS GAS
- EX STORM LINE
- PROP STORM INLET
- PROP STORM MANHOLE
- FLOW ARROW
- EX TREE

NOTES

1. THE EXISTENCE AND LOCATIONS OF ALL UNDERGROUND UTILITIES SHOWN ON THE DRAWINGS WERE OBTAINED FROM AVAILABLE RECORDS AND ARE APPROXIMATE. NEITHER THE OWNER NOR THE ENGINEER ASSUMES ANY RESPONSIBILITY FOR UTILITIES NOT SHOWN OR NOT IN THE LOCATION SHOWN. THE CONTRACTOR SHALL DETERMINE THE DEPTH AND LOCATION OF EXISTING UNDERGROUND UTILITIES PRIOR TO EXCAVATION AND SHALL BE REQUIRED TO TAKE ANY PRECAUTIONARY MEASURES TO PROTECT ALL LINES SHOWN AND/ OR ANY OTHER UNDERGROUND UTILITIES NOT OF RECORD OR NOT SHOWN ON THE PLANS. CONTRACTOR SHALL BE RESPONSIBLE FOR CONTACTING ALL FRANCHISE AND CITY UTILITIES PRIOR TO CONSTRUCTION.
2. FOR ALL PROPOSED CONNECTIONS TO EXISTING STORM DRAINS, THE CONTRACTOR SHALL FIELD-VERIFY THE EXACT HORIZONTAL AND VERTICAL LOCATIONS AND ELEVATIONS OF THE EXISTING STORM DRAINS AND NOTIFY THE ENGINEER OF ANY DISCREPANCIES.

No.	REVISIONS	DATE	BY

PROJECT NO. C00057/ BID NO. 27-31

Kimley»Horn
225 E. JOHN W. CARPENTER FREEWAY SUITE 1100
IRVING, TX 75062
PHONE: 214.369.6500
WWW.KIMLEY-HORN.COM
© 2026 KIMLEY-HORN AND ASSOCIATES, INC.
TEXAS REGISTERED ENGINEERING FIRM #F-928

11/06/2026

STATE OF TEXAS
CAROLYN F. COX
122243
LICENSED
PROFESSIONAL ENGINEER
Carolyn Cox

KHA PROJECT 063543066
DATE 11/06/2026
SCALE AS SHOWN
DESIGNED BY KCH
DRAWN BY ZMZ
CHECKED BY FLS

ADDISON
ADDISON JUNCTION PUBLIC INFRASTRUCTURE IMPROVEMENTS

DRAINAGE SYSTEM B
PLAN & PROFILE
LAT B-01E
BEGIN TO END

SHEET NUMBER
66

Plotted By: Mendoza, Joseph November 06, 2026 01:38:06pm C:\KHC\ACCDocs\Kimley-Horn\063543066-ADDISON JUNCTION PUBLIC\Project Files\CADD\DrnSheets\DRAINAGE - SYSTEM B AND C.dwg
This set and/or transmission, in the contents and designs presented herein, is an instrument of service prepared by Kimley-Horn and Associates, Inc. and shall be without liability to Kimley-Horn and Associates, Inc. for any unauthorized use or reuse of the contents and designs presented herein, as an instrument of service, is intended only for the specific purpose and client for which it was prepared. Reuse of and improper reliance on this document without written authorization and adaptation by Kimley-Horn and Associates, Inc. shall be without liability to Kimley-Horn and Associates, Inc.

LAT B-01B

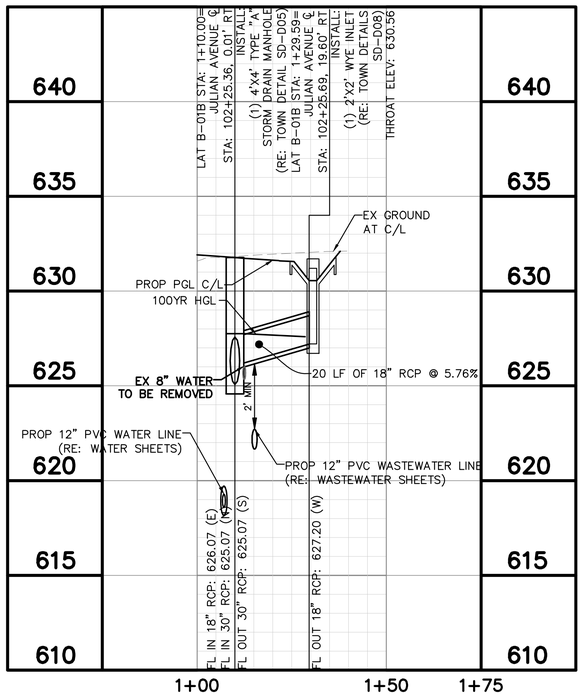

LAT B-01C

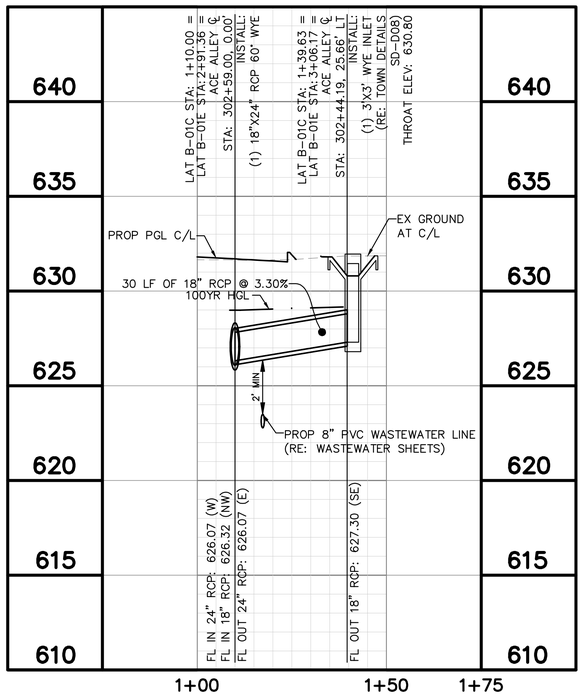

LAT B-01D

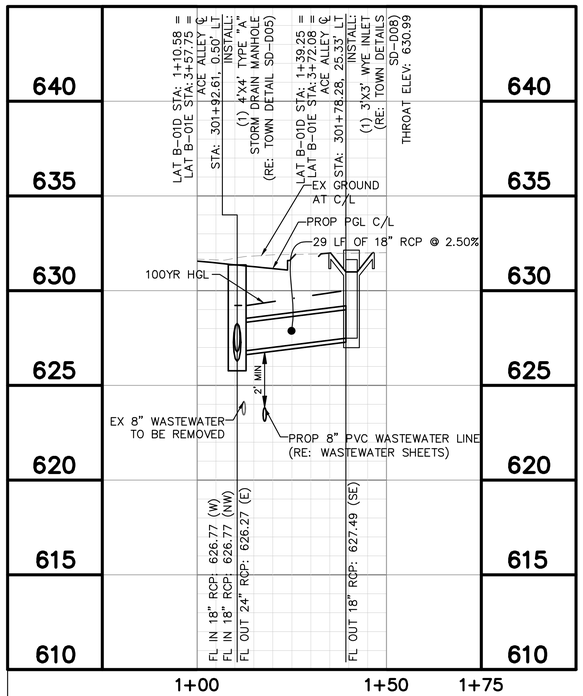

LAT B-01F

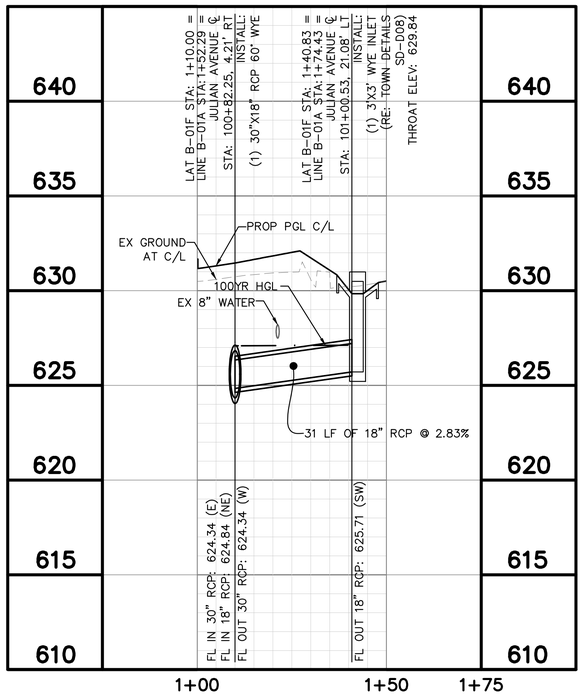

LAT B-01H

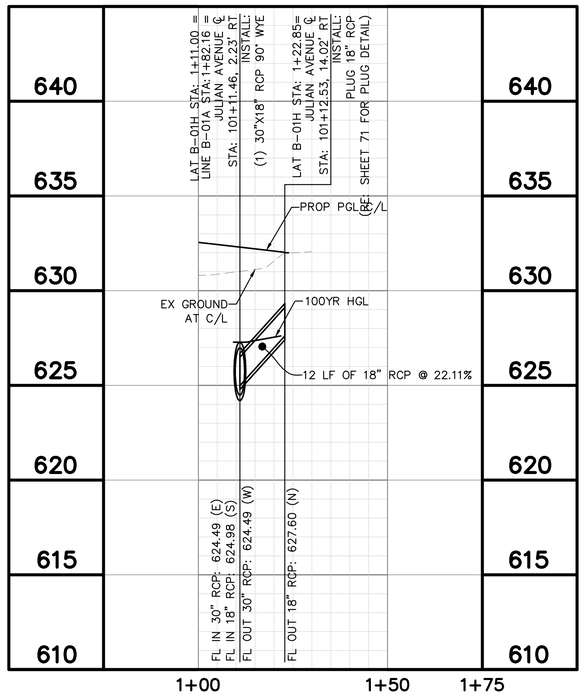

GRAPHIC SCALE IN FEET
0 10 20 40
HORIZONTAL

0 2 4 8
VERTICAL

LEGEND

- EX ROW
- PROP ROW
- PROP EASEMENT
- 10+00 / 5+00 — STORM LINE STATION / PROP STORM DRAIN / ROADWAY STATION
- PROP WASTEWATER LINE
- PROP WATER LINE
- EX 2" WATER
- EX 6" WATER
- EX 8" WATER
- EX 12" WATER
- EX 24" WATER
- EX 6" WASTEWATER
- EX 8" WASTEWATER
- EX 10" WASTEWATER
- EX 12" WASTEWATER
- EX OVERHEAD ELECTRIC
- EX ONCOR UGE
- EX TOWN OF ADDISON UGE
- EX ATT FIBER
- EX ATT TELEPHONE
- EX SPECTRUM FIBER
- EX SPECTRUM CABLE
- EX LOGIX FIBER
- EX MCI FIBER
- EX ATMOS GAS
- EX STORM LINE
- PROP STORM INLET
- PROP STORM MANHOLE
- FLOW ARROW
- EX TREE

NOTES

1. THE EXISTENCE AND LOCATIONS OF ALL UNDERGROUND UTILITIES SHOWN ON THE DRAWINGS WERE OBTAINED FROM AVAILABLE RECORDS AND ARE APPROXIMATE. NEITHER THE OWNER NOR THE ENGINEER ASSUMES ANY RESPONSIBILITY FOR UTILITIES NOT SHOWN OR NOT IN THE LOCATION SHOWN. THE CONTRACTOR SHALL DETERMINE THE DEPTH AND LOCATION OF EXISTING UNDERGROUND UTILITIES PRIOR TO EXCAVATION AND SHALL BE REQUIRED TO TAKE ANY PRECAUTIONARY MEASURES TO PROTECT ALL LINES SHOWN AND/ OR ANY OTHER UNDERGROUND UTILITIES NOT OF RECORD OR NOT SHOWN ON THE PLANS. CONTRACTOR SHALL BE RESPONSIBLE FOR CONTACTING ALL FRANCHISE AND CITY UTILITIES PRIOR TO CONSTRUCTION.
2. FOR ALL PROPOSED CONNECTIONS TO EXISTING STORM DRAINS, THE CONTRACTOR SHALL FIELD-VERIFY THE EXACT HORIZONTAL AND VERTICAL LOCATIONS AND ELEVATIONS OF THE EXISTING STORM DRAINS AND NOTIFY THE ENGINEER OF ANY DISCREPANCIES.

No.	REVISIONS	DATE	BY

PROJECT NO. C00057/ BID NO. 27-31

Kimley»Horn
225 E. JOHN W. CARPENTER FREEWAY SUITE 1100
IRVING, TX 75062
PHONE: 214-369-6500
WWW.KIMLEY-HORN.COM

© 2026 KIMLEY-HORN AND ASSOCIATES, INC.

TEXAS REGISTERED ENGINEERING FIRM #F-928

11/06/2026

STATE OF TEXAS
CAROLYN F. COX
122243
LICENSED
PROFESSIONAL ENGINEER
Carolyn Cox

KHA PROJECT 063543066	DATE 11/06/2026
SCALE AS SHOWN	DESIGNED BY KCH
	DRAWN BY ZMZ
	CHECKED BY FLS

ADDISON
ADDISON JUNCTION PUBLIC INFRASTRUCTURE IMPROVEMENTS

DRAINAGE LATERALS
LINE B-01A LATERALS

SHEET NUMBER
67

Plotted By: Mercado, Joseph November 05, 2026 01:38:12pm C:\ACCUAGCD\cad\Vortex-Intern\063543066-ADDISON JUNCTION PUBLIC\Draft-Files\GRDN\Vm-Sheets\NPAVING\Sheet Name: Notes and Grid Improper alteration on this document without written authorization and adaptation by Kimley-Horn and Associates, Inc. shall be without liability to Kimley-Horn and Associates, Inc. This document, together with the concepts and designs presented herein, is intended only for the specific purpose and client for which it was prepared. Reuse of

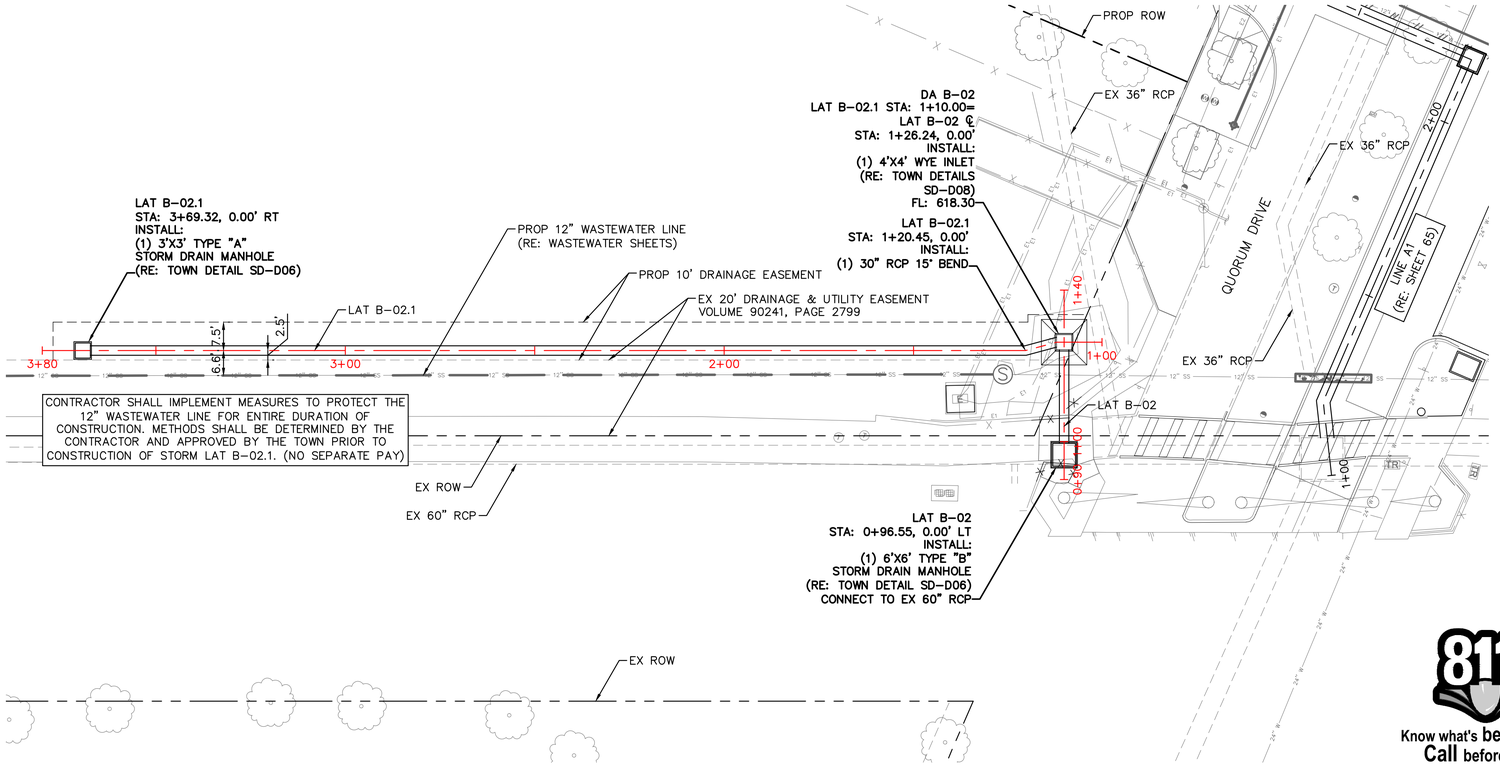

LAT B-02.1

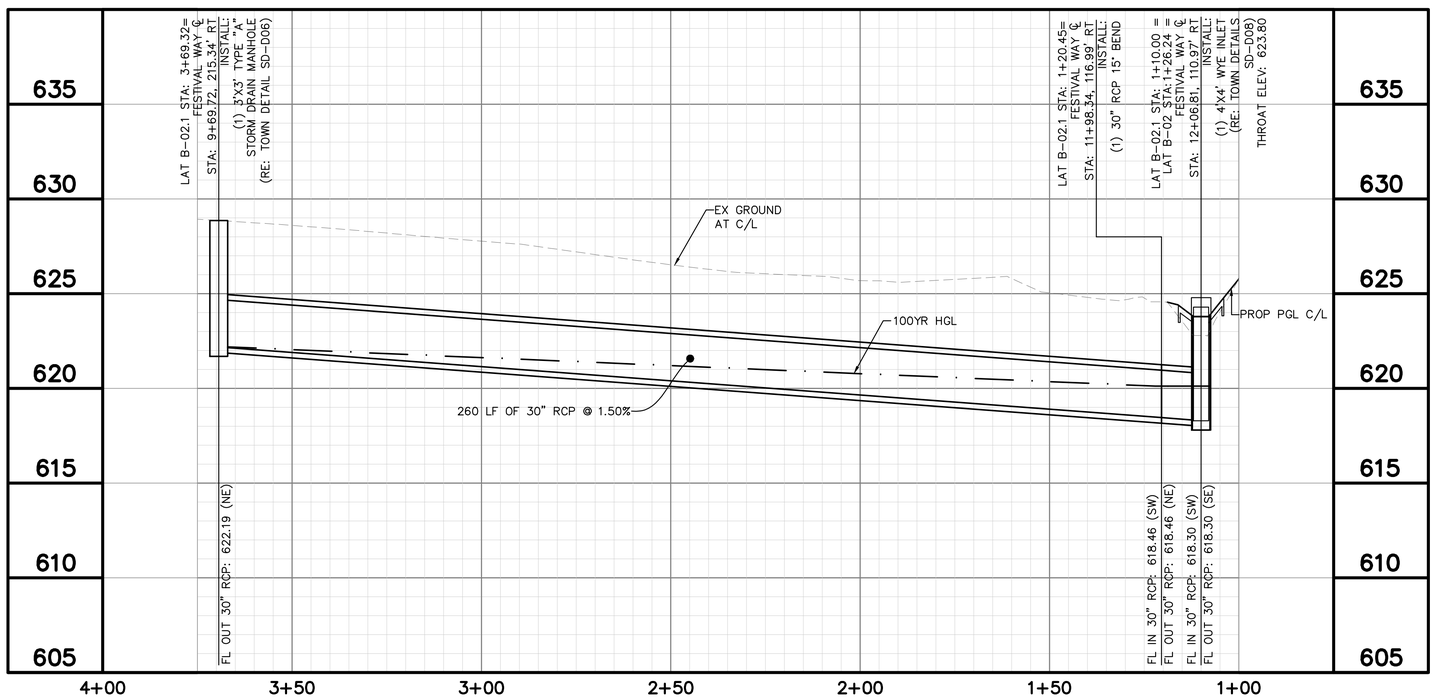

LAT B-02

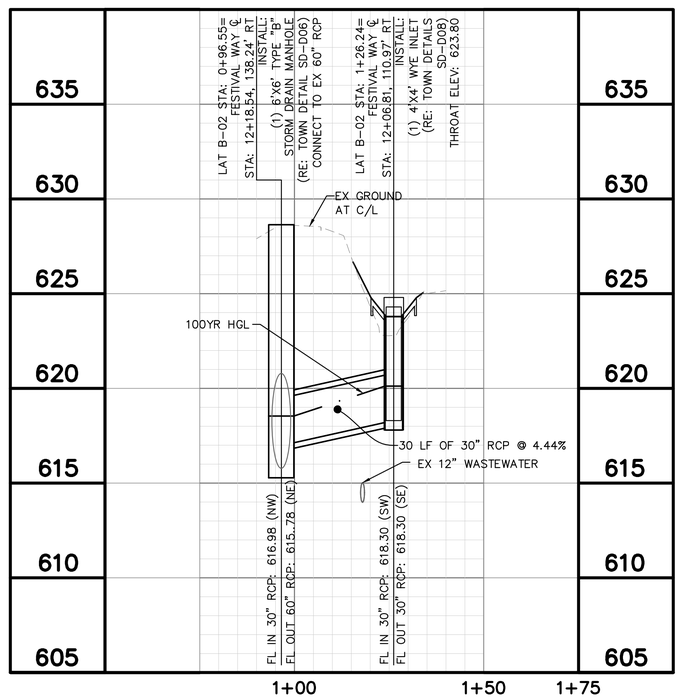

GRAPHIC SCALE IN FEET
0 10 20 40
HORIZONTAL

0 2 4 8
VERTICAL

NOTES

1. THE EXISTENCE AND LOCATIONS OF ALL UNDERGROUND UTILITIES SHOWN ON THE DRAWINGS WERE OBTAINED FROM AVAILABLE RECORDS AND ARE APPROXIMATE. NEITHER THE OWNER NOR THE ENGINEER ASSUMES ANY RESPONSIBILITY FOR UTILITIES NOT SHOWN OR NOT IN THE LOCATION SHOWN. THE CONTRACTOR SHALL DETERMINE THE DEPTH AND LOCATION OF EXISTING UNDERGROUND UTILITIES PRIOR TO EXCAVATION AND SHALL BE REQUIRED TO TAKE ANY PRECAUTIONARY MEASURES TO PROTECT ALL LINES SHOWN AND/ OR ANY OTHER UNDERGROUND UTILITIES NOT OF RECORD OR NOT SHOWN ON THE PLANS. CONTRACTOR SHALL BE RESPONSIBLE FOR CONTACTING ALL FRANCHISE AND CITY UTILITIES PRIOR TO CONSTRUCTION.
2. FOR ALL PROPOSED CONNECTIONS TO EXISTING STORM DRAINS, THE CONTRACTOR SHALL FIELD-VERIFY THE EXACT HORIZONTAL AND VERTICAL LOCATIONS AND ELEVATIONS OF THE EXISTING STORM DRAINS AND NOTIFY THE ENGINEER OF ANY DISCREPANCIES.

811 Know what's **below.** **Call** before you dig.

LEGEND

- EX ROW
- PROP ROW
- PROP EASEMENT
- 10+00 / 5+00 — STORM LINE STATION / PROP STORM DRAIN / ROADWAY STATION
- PROP WASTEWATER LINE
- PROP WATER LINE
- 2" W — EX 2" WATER
- 6" W — EX 6" WATER
- 8" W — EX 8" WATER
- 12" W — EX 12" WATER
- 24" W — EX 24" WATER
- 6" SS — EX 6" WASTEWATER
- 8" SS — EX 8" WASTEWATER
- 10" SS — EX 10" WASTEWATER
- 12" SS — EX 12" WASTEWATER
- OHE — EX OVERHEAD ELECTRIC
- E1 — EX ONCOR UGE
- E2 — EX TOWN OF ADDISON UGE
- C1 — EX ATT FIBER
- C2 — EX ATT TELEPHONE
- C3 — EX SPECTRUM FIBER
- C4 — EX SPECTRUM CABLE
- C5 — EX LOGIX FIBER
- C6 — EX MCI FIBER
- G1 — EX ATMOS GAS
- EX STORM LINE
- PROP STORM INLET
- PROP STORM MANHOLE
- FLOW ARROW
- EX TREE

PROJECT NO. C00057/ BID NO. 27-31

No.	REVISIONS	DATE	BY

Kimley»Horn
225 E. JOHN W. CARPENTER FREEWAY SUITE 1100
IRVING, TX 75062
PHONE: 214-565-0100
WWW.KIMLEY-HORN.COM
© 2026 KIMLEY-HORN AND ASSOCIATES, INC.
TEXAS REGISTERED ENGINEERING FIRM #F-928

11/06/2026

STATE OF TEXAS
CAROLYN F. COX
122243
LICENSED
PROFESSIONAL ENGINEER
Carolyn Cox

KHA PROJECT 063543066			
DATE 11/06/2026			
SCALE	AS SHOWN	DESIGNED BY	KCH
		DRAWN BY	ZMZ
		CHECKED BY	FLS

ADDISON
ADDISON JUNCTION
PUBLIC
INFRASTRUCTURE
IMPROVEMENTS

DRAINAGE
SYSTEM C
PLAN & PROFILE
LAT B-02 & LAT B-02.1
BEGIN TO END

SHEET NUMBER
68

Plotted By: Mc'Kenzie Joseph November 06, 2026 01:38:16pm G:\KCH\ACDocs\Winter Haven\063543066_ADDISON JUNCTION PUBLIC\Project Files\CAD\Sheets\DRAINAGE SYSTEM C\LAT B-02 & LAT B-02.1 BEGIN TO END.dwg
This electronic file is the property of Kimley-Horn and Associates, Inc. and is not to be used for any other purpose without the written consent of Kimley-Horn and Associates, Inc. Kimley-Horn and Associates, Inc. shall be without liability to Kimley-Horn and Associates, Inc. for any unauthorized use or modifications of this document or any data or design presented herein, or on electronic media. Any reuse is intended only for the specific purpose and client for which it was prepared. Reuse of or improper reliance on this document without written authorization and adaptation by Kimley-Horn and Associates, Inc. shall be without liability to Kimley-Horn and Associates, Inc.

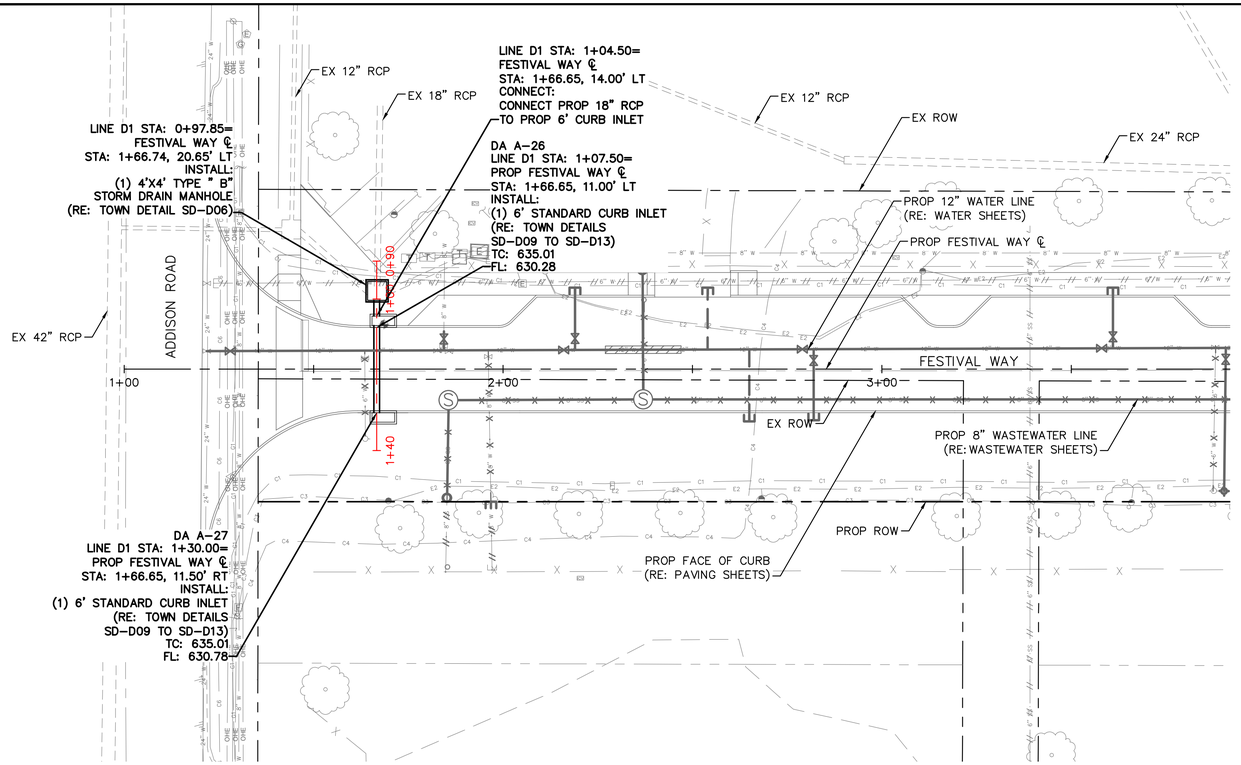

LINE D1

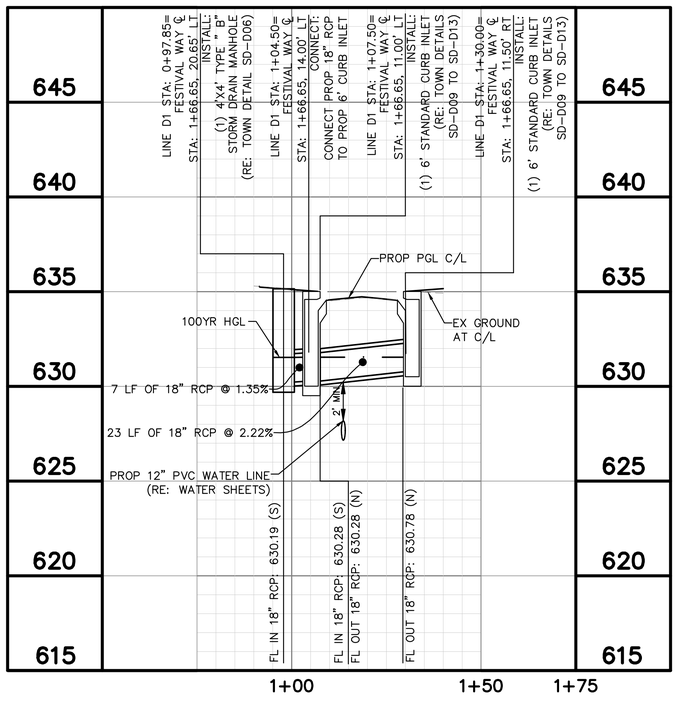



GRAPHIC SCALE IN FEET
0 10 20 40
HORIZONTAL

0 2 4 8
VERTICAL

LEGEND

- EX ROW
- PROP ROW
- PROP EASEMENT
- 10+00 / 5+00 — STORM LINE STATION / PROP STORM DRAIN / ROADWAY STATION
- PROP WASTEWATER LINE
- PROP WATER LINE
- 2" W — EX 2" WATER
- 6" W — EX 6" WATER
- 8" W — EX 8" WATER
- 12" W — EX 12" WATER
- 24" W — EX 24" WATER
- 6" SS — EX 6" WASTEWATER
- 8" SS — EX 8" WASTEWATER
- 10" SS — EX 10" WASTEWATER
- 12" SS — EX 12" WASTEWATER
- OHE — EX OVERHEAD ELECTRIC
- E1 — EX ONCOR UGE
- E2 — EX TOWN OF ADDISON UGE
- C1 — EX ATT FIBER
- C2 — EX ATT TELEPHONE
- C3 — EX SPECTRUM FIBER
- C4 — EX SPECTRUM CABLE
- C5 — EX LOGIX FIBER
- C6 — EX MCI FIBER
- G1 — EX ATMOS GAS
- EX STORM LINE
- PROP STORM INLET
- PROP STORM MANHOLE
- FLOW ARROW
- EX TREE

NOTES

1. THE EXISTENCE AND LOCATIONS OF ALL UNDERGROUND UTILITIES SHOWN ON THE DRAWINGS WERE OBTAINED FROM AVAILABLE RECORDS AND ARE APPROXIMATE. NEITHER THE OWNER NOR THE ENGINEER ASSUMES ANY RESPONSIBILITY FOR UTILITIES NOT SHOWN OR NOT IN THE LOCATION SHOWN. THE CONTRACTOR SHALL DETERMINE THE DEPTH AND LOCATION OF EXISTING UNDERGROUND UTILITIES PRIOR TO EXCAVATION AND SHALL BE REQUIRED TO TAKE ANY PRECAUTIONARY MEASURES TO PROTECT ALL LINES SHOWN AND/ OR ANY OTHER UNDERGROUND UTILITIES NOT OF RECORD OR NOT SHOWN ON THE PLANS. CONTRACTOR SHALL BE RESPONSIBLE FOR CONTACTING ALL FRANCHISE AND CITY UTILITIES PRIOR TO CONSTRUCTION.
2. FOR ALL PROPOSED CONNECTIONS TO EXISTING STORM DRAINS, THE CONTRACTOR SHALL FIELD-VERIFY THE EXACT HORIZONTAL AND VERTICAL LOCATIONS AND ELEVATIONS OF THE EXISTING STORM DRAINS AND NOTIFY THE ENGINEER OF any DISCREPANCIES.

Know what's below.
Call before you dig.

No.	REVISIONS	DATE	BY

PROJECT NO. C00057/ BID NO. 27-31

Kimley»Horn
225 E. JOHN W. CARPENTER FREEWAY SUITE 1100
IRVING, TX 75062
PHONE: 214.369.6500
WWW.KIMLEY-HORN.COM

© 2026 KIMLEY-HORN AND ASSOCIATES, INC.

TEXAS REGISTERED ENGINEERING FIRM #F-928

11/06/2026

STATE OF TEXAS
CAROLYN F. COX
122243
LICENSED
PROFESSIONAL ENGINEER

Carolyn Cox

KHA PROJECT 063543066	DATE 11/06/2026	SCALE AS SHOWN	DESIGNED BY KCH	DRAWN BY ZMZ	CHECKED BY FLS

ADDISON
ADDISON JUNCTION PUBLIC INFRASTRUCTURE IMPROVEMENTS

DRAINAGE SYSTEM D
PLAN & PROFILE
LINE D1
BEGIN TO END

SHEET NUMBER
69

Printed By: Mendoza, Joseph, November 06, 2026 - 01:38:29pm - G:\ACCDocs\Kimley-Horn\063543066-ADDISON JUNCTION PUBLIC\Project Files\ACAD\PlnSheet\DRAINAGE - SYSTEM A.dwg
This electronic file and the contents and designs presented thereon, as an instrument of service, is intended only for the specific purpose and client for which it was prepared. Reuse of and improper reliance on this document without written authorization and adaptation by Kimley-Horn and Associates, Inc. shall be without liability to Kimley-Horn and Associates, Inc.

Plotted By: Zanetti, Zach - November 06, 2026 - 02:30:29pm C:\ACV\ACVDocs\Kimley-Horn\063543066-ADDISON JUNCTION PUBLIC\Project Files\CAD\PlanSheets\CITY DETAILS.dwg
This document, together with the concepts and designs presented herein, as an instrument of service, is intended only for the specific purpose and client for which it was prepared. Reuse of and improper reliance on this document without written authorization and adaptation by Kimley-Horn and Associates, Inc. shall be without liability to Kimley-Horn and Associates, Inc.

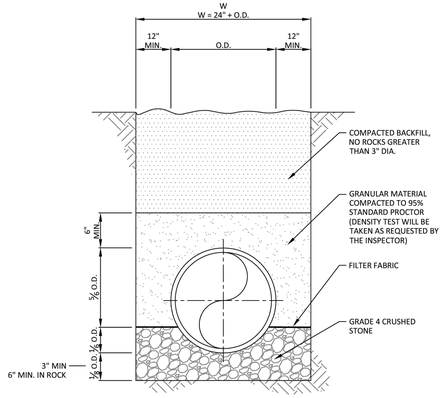

RCP STORM DRAIN PIPE BEDDING
N.T.S.

NOTE
1. THE DEPTH OF TRENCH BELOW THE PROPOSED CONDUIT SHALL BE AS FOLLOWS:

- 3" MIN. FOR 27" PIPE & SMALLER.
- 4" MIN. FOR 30 " TO 60" PIPE.
- 6" MIN. FOR 66" PIPE OR LARGER.

ADDISON PUBLIC WORKS & ENGINEERING SERVICES	RCP STORM DRAIN PIPE BEDDING	STANDARD CONSTRUCTION DETAILS STORM DRAINAGE		
		DATE: JANUARY 2022	REV DATE: -	SHEET: SD-D02

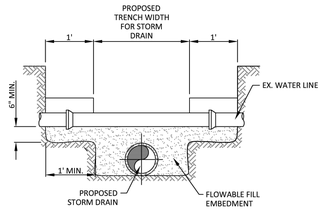

UTILITY SUPPORT DETAIL
N.T.S.

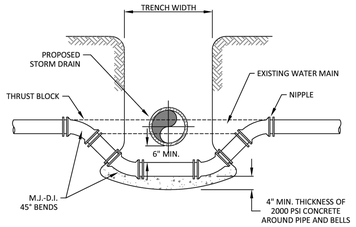

WATER MAIN LOWERING DETAIL
N.T.S.

ADDISON PUBLIC WORKS & ENGINEERING SERVICES	WATER MAIN LOWERING & UTILITY SUPPORT DETAILS	STANDARD CONSTRUCTION DETAILS STORM DRAINAGE		
		DATE: JANUARY 2022	REV DATE: -	SHEET: SD-D03

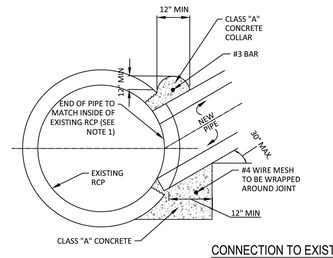

NOTES:
1. MAXIMUM DIAMETER OF NEW PIPES EQUALS ONE HALF OF EXISTING PIPE'S DIAMETER.
2. REMOVAL OF PLUG FROM EXISTING RCP TO BE ACCOMPLISHED USING A MASONRY DRILL AT A SPACING EQUAL TO THE DRILL BIT DIAMETER IN A CIRCULAR PATTERN OR A MASONRY SAW IN AN OCTAGONAL PATTERN PER DETAIL
3. FOR LATERAL CONNECTIONS TO EXISTING STORM DRAIN, MATCH CENTER LINE ELEVATION OF MAIN LINE TO CENTER LINE ELEVATION OF NEW LATERAL

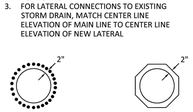

CONNECTION TO EXISTING RCP STORM DRAIN
N.T.S.

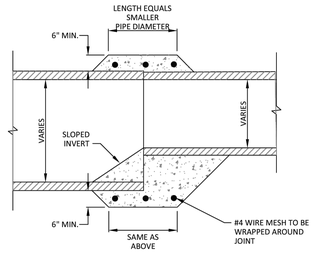

NOTES:
1. THIS PROCEDURE/DETAIL WILL ONLY BE USED WHEN A PREFAB REDUCTION IS NOT POSSIBLE.
2. CONCRETE SHALL BE CLASS A.

PIPE COLLAR
N.T.S.

ADDISON PUBLIC WORKS & ENGINEERING SERVICES	CONNECTION TO EXISTING RCP STORM DRAIN AND PIPE COLLAR	STANDARD CONSTRUCTION DETAILS STORM DRAINAGE		
		DATE: JANUARY 2022	REV DATE: -	SHEET: SD-D04

NOTE:
SEE TOWN OF ADDISON STD. FRAME AND COVER DETAIL.

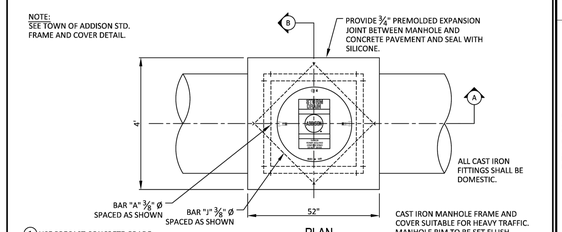

PLAN
N.T.S.

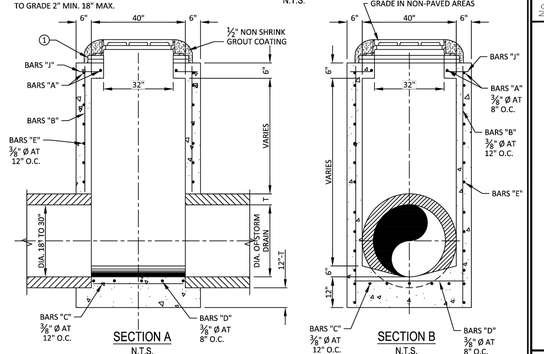

SECTION A
N.T.S.

SECTION B
N.T.S.

ADDISON PUBLIC WORKS & ENGINEERING SERVICES	TYPE "A" STORM DRAIN MANHOLE (FOR 18" TO 30" RCP)	STANDARD CONSTRUCTION DETAILS STORM DRAINAGE		
		DATE: JANUARY 2022	REV DATE: AUGUST 2026	SHEET: SD-D05

NOTE:
SEE TOWN OF ADDISON STD. FRAME AND COVER DETAIL.

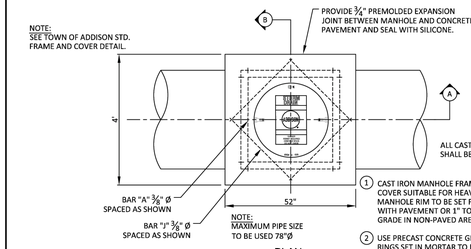

1 CAST IRON MANHOLE FRAME AND COVER SUITABLE FOR HEAVY TRAFFIC. MANHOLE RIM TO BE SET FLUSH WITH PAVEMENT OR 1" TO 4" ABOVE GRADE IN NON-PAVED AREAS

2 USE PRECAST CONCRETE GRADE RINGS SET IN MORTAR TO RAISE TO GRADE 2" MIN. 18" MAX.

PLAN
NTS

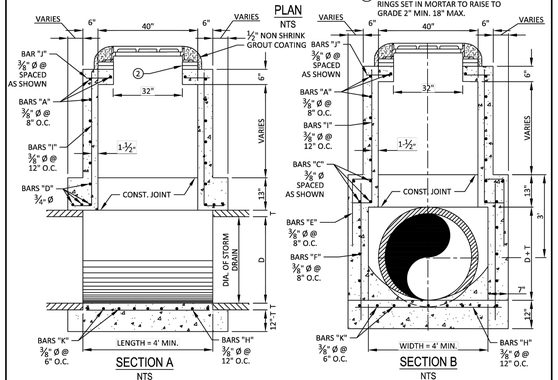

SECTION A
NTS

SECTION B
NTS

ADDISON PUBLIC WORKS & ENGINEERING SERVICES	TYPE "B" STORM DRAIN MANHOLE (FOR 33" TO 78" RCP)	STANDARD CONSTRUCTION DETAILS STORM DRAINAGE		
		DATE: JANUARY 2022	REV DATE: AUGUST 2026	SHEET: SD-D06

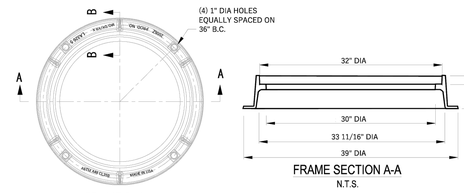

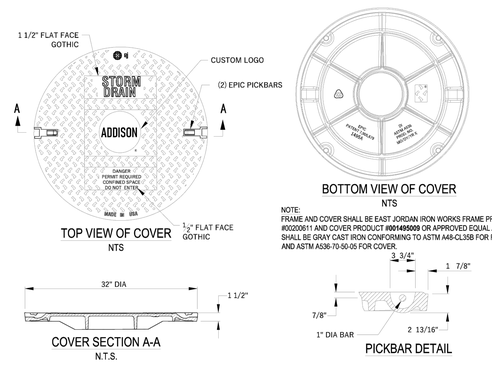

ADDISON PUBLIC WORKS & ENGINEERING SERVICES	STORM MANHOLE FRAME & COVER	STANDARD CONSTRUCTION DETAILS STORM DRAINAGE		
		DATE: JANUARY 2022	REV DATE: AUGUST 2026	SHEET: SD-D07A

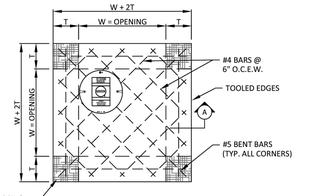

INLET SIZE	T	W
2' SQUARE	7"	2'-0
3' SQUARE	7"	3'-0
4' SQUARE	7"	4'-0
5' SQUARE	8"	5'-0
6' SQUARE	9"	6'-0

PLAN OF TOP SLAB
N.T.S.

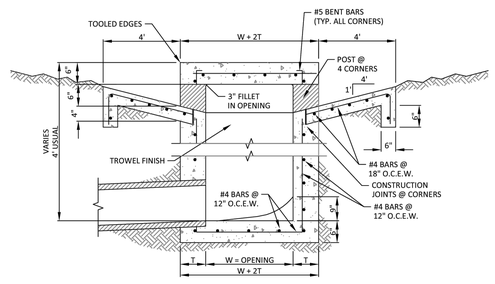

SECTION A
N.T.S.

ADDISON PUBLIC WORKS & ENGINEERING SERVICES	WYE INLET DETAIL	STANDARD CONSTRUCTION DETAILS STORM DRAINAGE		
		DATE: JANUARY 2022	REV DATE: -	SHEET: SD-D08

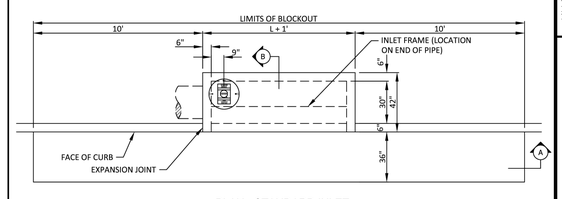

PLAN - STANDARD INLET
N.T.S.

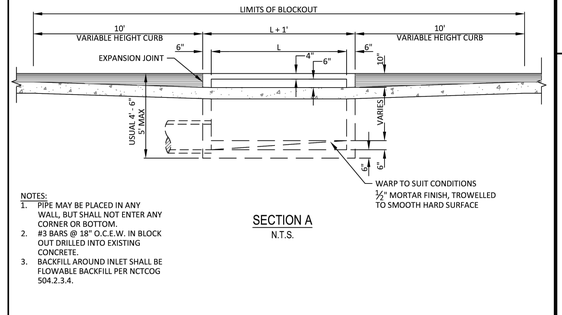

NOTES:
1. PIPE MAY BE PLACED IN ANY WALL, BUT SHALL NOT ENTER ANY CORNER OR BOTTOM.
2. #3 BARS @ 18" O.C.E.W. IN BLOCK OUT DRILLED INTO EXISTING CONCRETE.
3. BACKFILL AROUND INLET SHALL BE FLOWABLE BACKFILL PER NCTCOG 504.2.3.4.

SECTION A
N.T.S.

ADDISON PUBLIC WORKS & ENGINEERING SERVICES	STANDARD CURB INLET	STANDARD CONSTRUCTION DETAILS STORM DRAINAGE		
		DATE: JANUARY 2022	REV DATE: -	SHEET: SD-D09

No.	REVISIONS	DATE	BY

PROJECT NO. C00057/ BID NO. 27-31

Kimley»Horn
225 E. JOHN W. CARPENTER FREEWAY SUITE 1100
IRVING, TX 75063
PHONE: 214-420-5600
WWW.KIMLEY-HORN.COM
© 2026 KIMLEY-HORN AND ASSOCIATES, INC.
TEXAS REGISTERED ENGINEERING FIRM #F-928

11/06/2026

STATE OF TEXAS
L. NATHAN ANTE
96666
LICENSED
ENGINEER
L. Nathan Ante

KHA PROJECT 063543066	DATE 11/06/2026	SCALE AS SHOWN
		DESIGNED BY KCH
		DRAWN BY ZMZ
		CHECKED BY FLS

ADDISON JUNCTION PUBLIC INFRASTRUCTURE IMPROVEMENTS

DRAINAGE STANDARD DETAILS (SHEET 1 OF 2)

SHEET NUMBER
70

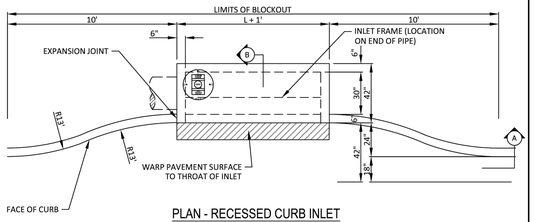

PLAN - RECESSED CURB INLET
N.T.S.

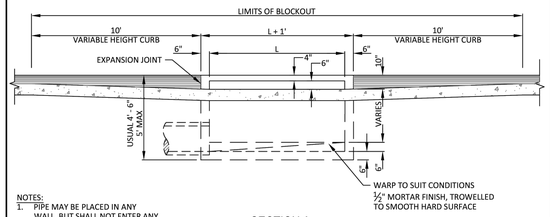

NOTES:
1. PIPE MAY BE PLACED IN ANY WALL, BUT SHALL NOT ENTER ANY CORNER OR BOTTOM.
2. #3 BARS @ 18" O.C.E.W. IN BLOCK OUT DRILLED INTO EXISTING CONCRETE.
3. BACKFILL AROUND INLET SHALL BE FLOWABLE BACKFILL PER NCTCOG 504.2.3.4.

SECTION A
N.T.S.

PUBLIC WORKS & ENGINEERING SERVICES	RECESSED CURB INLET	STANDARD CONSTRUCTION DETAILS STORM DRAINAGE		
		DATE: JANUARY 2022	REV DATE: -	SHEET: SD-D10

NOTE:
REINFORCEMENT SHOWN IS ADDITIONAL FOR SPECIAL CONDITION, FOR REMAINDER OF REINFORCEMENT SEE SECTIONS.

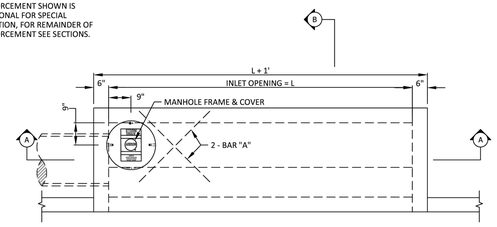

PLAN - STANDARD INLET
N.T.S.

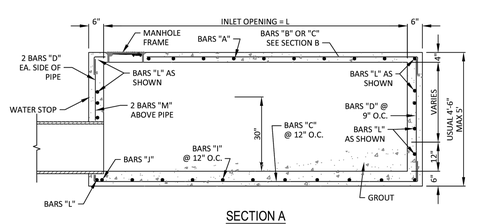

SECTION A
N.T.S.

PUBLIC WORKS & ENGINEERING SERVICES	STANDARD CURB INLET 4, 6, 8 & 10 FOOT INLETS	STANDARD CONSTRUCTION DETAILS STORM DRAINAGE		
		DATE: JANUARY 2022	REV DATE: -	SHEET: SD-D11

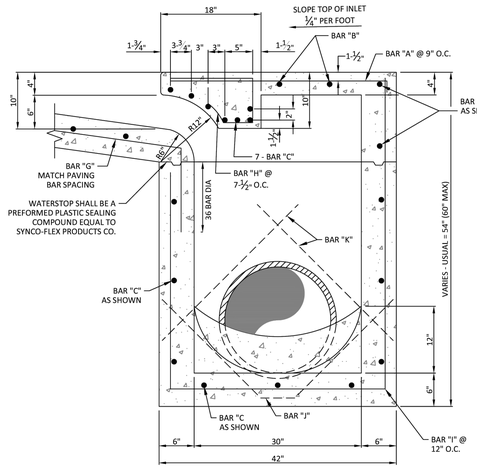

SECTION B
N.T.S.

PUBLIC WORKS & ENGINEERING SERVICES	STANDARD AND RECESSED CURB INLET 4, 6, 8 & 10 FOOT INLETS TYPICAL SECTION	STANDARD CONSTRUCTION DETAILS STORM DRAINAGE		
		DATE: JANUARY 2022	REV DATE: -	SHEET: SD-D12

REINFORCING STEEL SCHEDULE
DIMENSIONS SHOWN ARE FOR MAXIMUM SIZE INLET

INLET LENGTH	BAR TYPE	BAR DIA. (1/8")	NO REQ'D	BAR DIMENSIONS A	B	C
4'	A	3	6	3'-2"	0'-3"	-
	B	3	2	2'-10"	-	-
	C	4	18	4'-8"	0'-6"	-
	D	4	9	4'-8"	-	-
	G	3	4	2'-0"	1'-3"	-
	H	3	7	*	*	*
	I	4	3	3'-2"	3'-2"	4'-8"
	J	5	1	*	*	*
	K	5	2	3'-2"	0'-6"	-
	L	4	11	3'-2"	0'-6"	-
	M	4	2	3'-0"**	-	-
6'	A	3	9	3'-2"	0'-3"	-
	B	3	2	4'-10"	-	-
	C	4	18	6'-8"	0'-6"	-
	D	4	9	4'-8"	-	-
	G	3	6	2'-0"	1'-3"	-
	H	3	11	*		*
	I	4	5	3'-2"	3'-2"	4'-8"
	J	5	1	*	*	*
	K	5	2	3'-2"	0'-6"	-
	L	4	11	3'-2"	0'-6"	-
	M	4	2	3'-0"**	-	-
8'	A	3	12	3'-2"	0'-3"	-
	B	3	2	6'-10"	-	-
	C	4	18	8'-8"	0'-6"	-
	D	4	9	4'-8"	-	-
	G	3	7	2'-0"	1'-3"	-
	H	3	14	*		*
	I	4	7	3'-2"	3'-2"	4'-8"
	J	5	1	*	*	*
	K	5	2	3'-2"	0'-6"	-
	L	4	11	3'-2"	0'-6"	-
	M	4	2	3'-0"**	-	-
10'	A	3	15	3'-2"	0'-3"	-
	B	3	2	8'-10"	-	-
	C	4	18	10'-8"	0'-6"	-
	D	4	9	4'-8"	-	-
	G	3	9	2'-0"	1'-3"	-
	H	3	17	*	*	*
	I	4	9	3'-2"	3'-2"	4'-8"
	J	5	1	*	*	*
	K	5	2	3'-2"	0'-6"	-
	L	4	11	3'-2"	0'-6"	-
	M	4	2	3'-0"**	-	-

* SEE DIAGRAM FOR DIMENSIONS
** FIELD CUT AS REQUIRED TO ACCOMMODATE DRAIN PIPE

PUBLIC WORKS & ENGINEERING SERVICES	REINFORCING STEEL SCHEDULE 4, 6, 8, & 10 FOOT INLETS	STANDARD CONSTRUCTION DETAILS STORM DRAINAGE		
		DATE: JANUARY 2022	REV DATE: -	SHEET: SD-D13

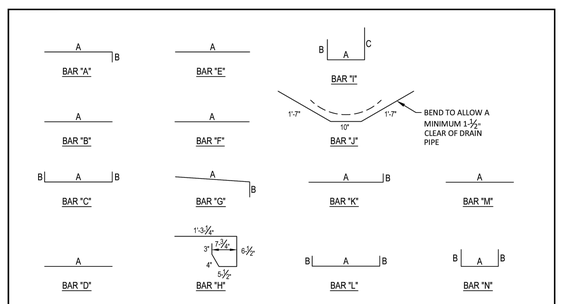

REINFORCING BAR DIAGRAMS
N.T.S.

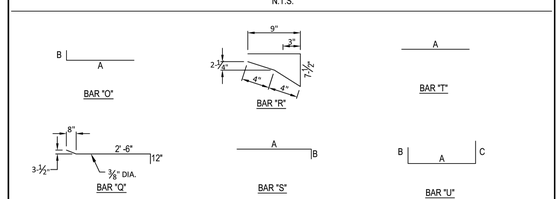

BAR DIAGRAMS (BRICK ON INLET)
N.T.S.

NOTE:
BAR DESIGNATIONS AND DIMENSIONS ARE DIFFERENT FROM STEEL SCHEDULE FOR REGULAR INLETS

PUBLIC WORKS & ENGINEERING SERVICES	REINFORCING BAR DIAGRAMS	STANDARD CONSTRUCTION DETAILS STORM DRAINAGE		
		DATE: JANUARY 2022	REV DATE: -	SHEET: SD-D21

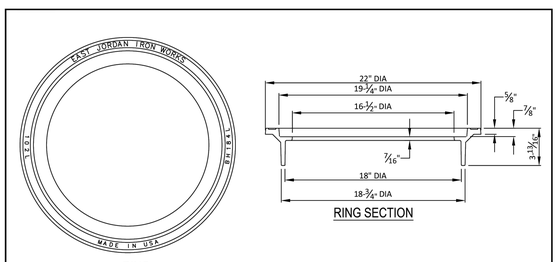

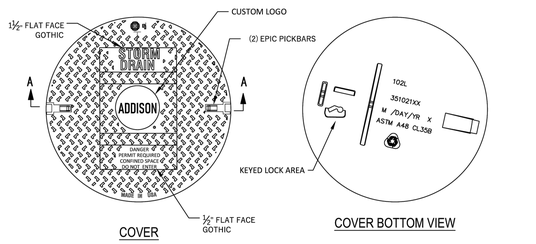

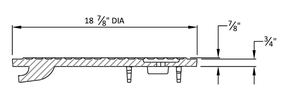

NOTE:
FRAME AND COVER SHALL BE EAST JORDAN IRON WORKS FRAME PRODUCT #35202000 AND COVER PRODUCT #NCR08-0060B OR APPROVED EQUAL AND SHALL BE GRAY CAST IRON CONFORMING TO ASTM A48-CL35B.

PUBLIC WORKS & ENGINEERING SERVICES	INLET FRAME & COVER	STANDARD CONSTRUCTION DETAILS STORM DRAINAGE		
		DATE: JANUARY 2022	REV DATE: -	SHEET: SD-D23

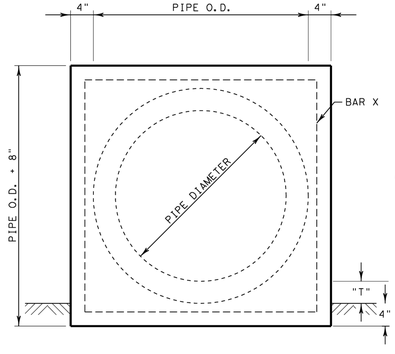

FRONT ELEVATION

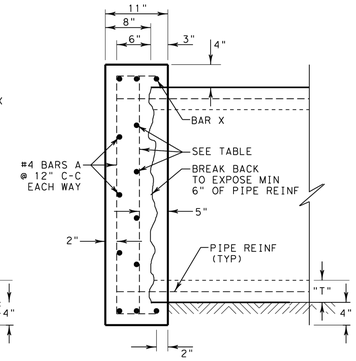

SIDE ELEVATION

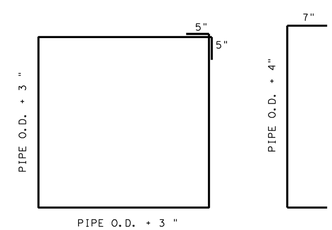

#4 BAR X

#4 BAR A

INNER REINFORCING SIZE/SPACING		
PIPE DIA (IN)	MAXIMUM DEPTH 15'	30'
<48	#4 @ 12" C-C	#4 @ 12" C-C
60	#4 @ 12" C-C	#4 @ 10" C-C
72	#4 @ 12" C-C	#5 @ 10" C-C
84	#4 @ 10" C-C	#5 @ 8" C-C

PIPE END CAP GENERAL NOTES

1. "T" = PIPE WALL THICKNESS.
2. ALL CONCRETE SHALL BE CLASS "C".
3. ALL REINFORCING STEEL SHALL BE GRADE 60.
4. OCTAGONAL PLUG MAY BE USED IN LIEU OF SQUARE. PROVIDE 4" MINIMUM COVER OVER OUTSIDE OF PIPE. DIMENSIONS OF PIPE PLUG AND REINFORCING TO BE AS APPROVED.

DRAINAGE PIPE END CAP OR PLUG DETAILS
N. T. S.

No.	REVISIONS	DATE	BY

PROJECT NO. C00057/ BID NO. 27-31

Kimley»Horn
225 E. JOHN W. CARPENTER FREEWAY SUITE 1100
IRVING, TX 75063
PHONE: 214-420-5600
WWW.KIMLEY-HORN.COM
© 2026 KIMLEY-HORN AND ASSOCIATES, INC.
TEXAS REGISTERED ENGINEERING FIRM #F-928

11/06/2026
STATE OF TEXAS
L. NATHAN ANTE
96666
LICENSED
PROFESSIONAL ENGINEER
L. Nathan Ante

KHA PROJECT 063543066	DATE 11/06/2026	SCALE AS SHOWN	DESIGNED BY KCH
		DRAWN BY ZMZ	CHECKED BY FLS

ADDISON
ADDISON JUNCTION PUBLIC INFRASTRUCTURE IMPROVEMENTS

DRAINAGE
STANDARD DETAILS
(SHEET 2 OF 2)

SHEET NUMBER
71

Plotted By: Zonetti, Zach November 06, 2026 02:30:35pm C:\ACC\ACCDocs\Kimley-Horn\063543066-ADDISON JUNCTION PUBLIC\Project Files\CADD\PlanSheets\CITY DETAILS.dwg
This document, together with the concepts and designs presented herein, as an instrument of service, is intended only for the specific purpose and client for which it was prepared. Reuse

811 Know what's below. Call before you dig.

No.	REVISIONS	DATE	BY

PROJECT NO. C00057/ BID NO. 27-31

Kimley»Horn
225 E. JOHN W. CARPENTER FREEWAY SUITE 1100
IRVING, TX 75062
PHONE: 214-565-0500
WWW.KIMLEY-HORN.COM

© 2026 KIMLEY-HORN AND ASSOCIATES, INC.
TEXAS REGISTERED ENGINEERING FIRM #F-928

11/06/2026

STATE OF TEXAS
HANNAH G. WOOD
162206
LICENSED
PROFESSIONAL ENGINEER

KHA PROJECT	063543066
DATE	11/06/2026
SCALE	AS SHOWN
DESIGNED BY	HGW
DRAWN BY	CIS
CHECKED BY	LMW

ADDISON
ADDISON JUNCTION PUBLIC INFRASTRUCTURE IMPROVEMENTS

WATER
OVERALL WATER LINE MAP

SHEET NUMBER
72

Plotted By: Stephens, Ian November 06, 2026 04:22:18pm G:\VCS\ADDocs\Wmpw-Hcm\063543066-ADDISON JUNCTION PUBLIC\Project Files\CAD\PlanSheets\WATER - OVERALL MAP.dwg
This document, together with the concepts and designs presented herein, as an instrument of service, is intended only for the specific purpose and client for which it was prepared. Reuse of and improper reliance on this document without written authorization and adaptation by Kimley-Horn and Associates, Inc. shall be without liability to Kimley-Horn and Associates, Inc.

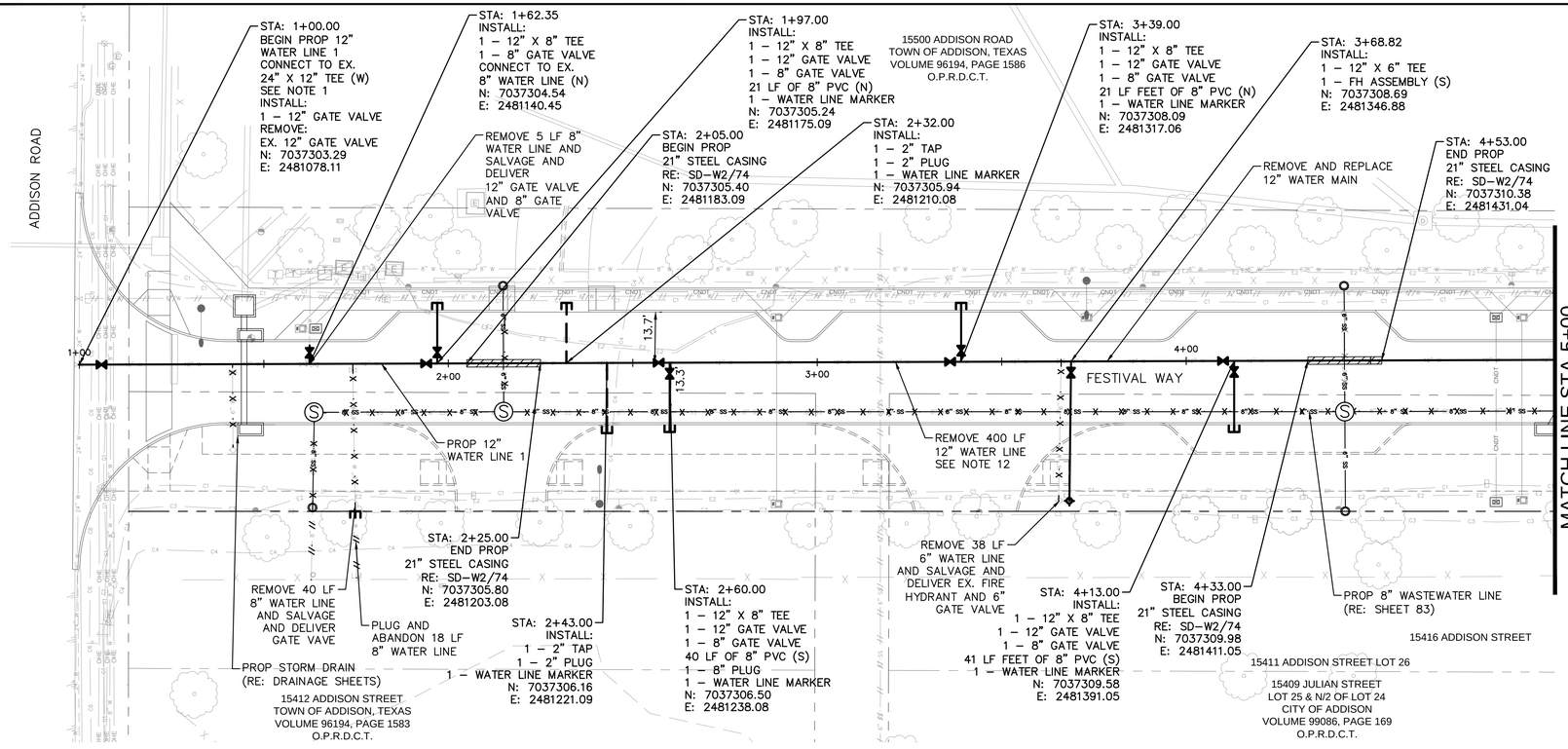

12" WATER LINE 1

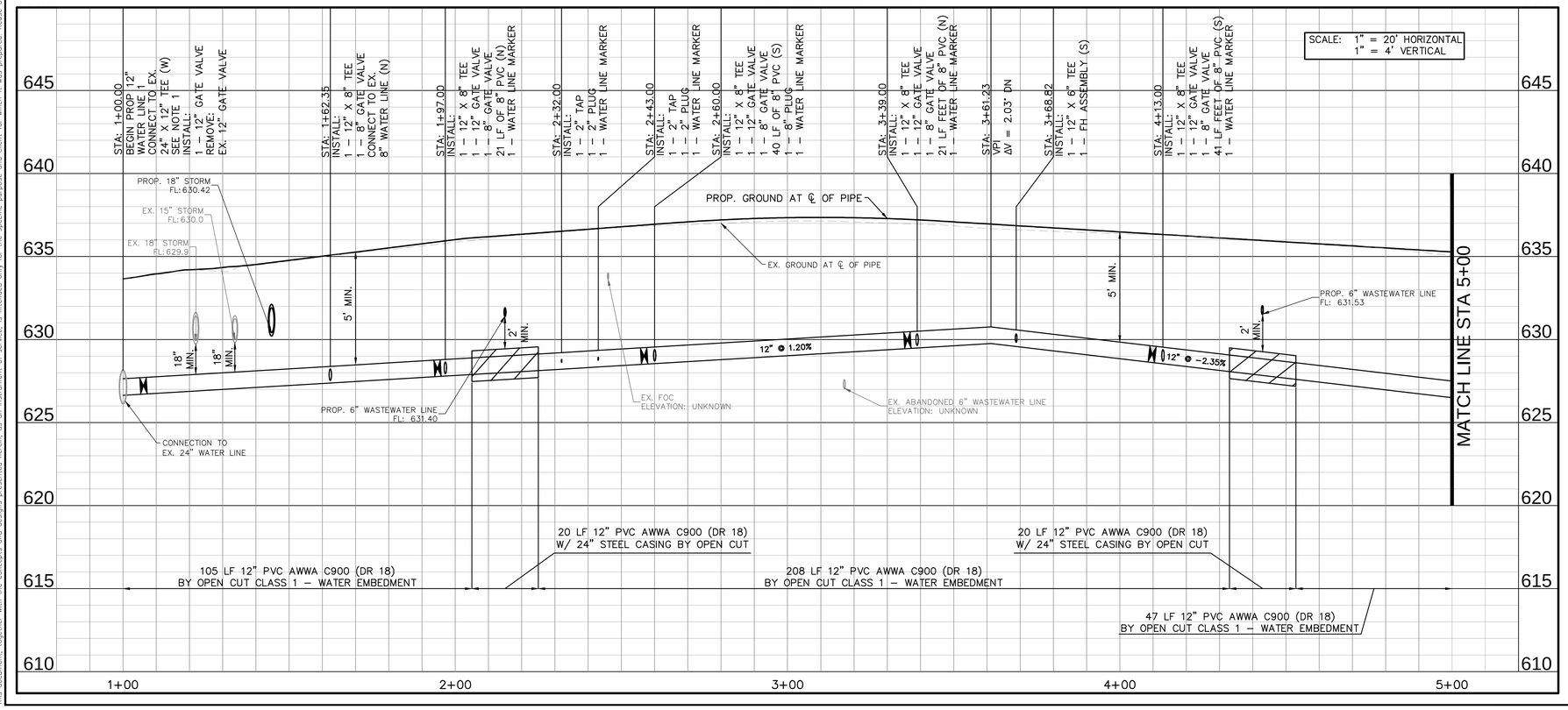

UTILITY LEGEND

- PROP WATER LINE
- PROP 1" & 2" WATER SERVICE
- PROP FIRE HYDRANT
- PROP WATER VALVE
- PROP BORE WITH STEEL CASING
- PROP WASTEWATER LINE
- PROP. SANITARY SEWER MANHOLE
- EXISTING WATER LINE
- EXISTING FIRE HYDRANT
- EXISTING WATER VALVE
- EXISTING SANITARY SEWER LINE
- EXSITING SANITARY SEWER MANHOLE
- EXISTING STORM SEWER LINE
- EXISTING STORM MANHOLE
- EXISTING OVERHEAD POWER LINE
- EXISTING POWER POLE
- EXSITING FENCE
- EXISTING TREE
- ABANDON EXISTING PIPING
- REMOVE EXISTING PIPING

NORTH

GRAPHIC SCALE IN FEET
0 10 20 40

- EXISTING AT&T FIBER
- EXISTING EXTENET COMM.
- EXISTING FIBERLIGHT COMM.
- EXISTING LOGIX COMM.
- EXISTING MCI COMM.
- EXISTING SPECTRUM COMM.
- EXISTING SPECTRUM FIBER.
- EXISTING LUMEN FIBER
- EXISTING GAS
- EXISTING ONCOR ELECTRIC
- EXISTING PRIVATE ELECTRIC
- TREE REMOVAL

NOTES:

1. CONTRACTOR SHALL EXPOSE AND FIELD VERIFY VERTICAL AND HORIZONTAL LOCATION OF EXISTING 24" X 12" TEE PRIOR TO CONSTRUCTION. CONTRACTOR SHALL NOTIFY ENGINEER IF LOCATION VARIES FROM WHAT IS SHOWN IN PLANS.
2. CONTRACTOR TO FIELD VERIFY VERTICAL AND HORIZONTAL LOCATION OF EXISTING UTILITIES PRIOR TO CONSTRUCTION.
3. CONTRACTOR TO LOCATE ALL SERVICE LATERALS AND WATER METERS PRIOR TO CONSTRUCTION TO ENSURE SERVICE IS MAINTAINED.
4. TOWN OF ADDISON STAFF SHALL OPERATE ALL EXISTING WATER SYSTEM VALVES. CONTRACTOR SHALL COORDINATE WITH THE TOWN A MINIMUM OF [XX] HOURS PRIOR TO ANY WORK REQUIRING VALVE OPERATION, SYSTEM SHUTDOWN, CONNECTION TO THE EXISTING SYSTEM, OR TESTING AFFECTING THE EXISTING SYSTEM. NO SHUTDOWN OR CONNECTION SHALL OCCUR WITHOUT PRIOR TOWN APPROVAL. CONTRACTOR SHALL HAVE ALL REQUIRED MATERIALS, EQUIPMENT, PERSONNEL, AND TEMPORARY FACILITIES IN PLACE PRIOR TO INITIATING A SHUTDOWN. CONTRACTOR SHALL COORDINATE TESTING WITH THE TOWN AND SHALL CORRECT AND RETEST ANY DEFICIENCIES PRIOR TO PLACING THE AFFECTED FACILITIES INTO SERVICE. THE TOWN RESERVES THE RIGHT TO DELAY WORK IF CONDITIONS ARE NOT ACCEPTABLE TO PROCEED.
5. PROVIDE CONCRETE THRUST BLOCKS AT ALL BENDS, TEES, WYES, VALVES, AND HYDRANTS. VERTICAL BENDS DOWN SHALL UTILIZE RESTRAINED JOINTS; PROVIDE ADDITIONAL RESTRAINED JOINTS WHERE SHOWN ON THE PLANS. POLYWRAP ALL FITTINGS WITH 8-MIL POLYETHYLENE PRIOR TO CONCRETE PLACEMENT. THRUST BLOCKS SHALL BE MINIMUM CLASS "B" (3,000 PSI) CONCRETE, DESIGNED FOR A 200 PSI TEST PRESSURE, AND PLACED AGAINST UNDISTURBED EARTH WITH FORMS AS REQUIRED TO KEEP FLANGES, GLANDS, AND BOLTS ACCESSIBLE. CONSTRUCT THRUST RESTRAINTS IN ACCORDANCE WITH CURRENT NCTCOG STANDARDS.
6. FIRE HYDRANT ASSEMBLY INCLUDES ALL FITTINGS, TEES, PIPES, AND VALVES.
7. CONTRACTOR SHALL ONLY HAVE ONE FIRE HYDRANT OUT OF SERVICE AT ANY TIME DURING CONSTRUCTION.
8. CONTRACTOR TO BRACE ELECTRIC CONDUIT DURING CONSTRUCTION.
9. THE CONTRACTOR SHALL BE RESPONSIBLE FOR MAKING THE WATER LINE CONNECTIONS AS SPECIFIED IN THE PLANS. ANY ADDITIONAL PIPE, FITTINGS, OR MATERIALS NOT SPECIFICALLY SHOWN IN THE PLANS BUT NEEDED TO MAKE THE CONNECTIONS SHALL BE CONSIDERED SUBSIDIARY TO THE PROJECT COST AND REFLECTED IN THE UNIT BID PRICES FOR THE VARIOUS BID ITEMS LISTED IN THE PROPOSAL.
10. ALL DUCTILE IRON FITTINGS, VALVES, FIRE HYDRANTS AND OTHER METAL APPURTENANCES LOCATED BELOW GROUND SHALL BE WRAPPED IN POLYETHYLENE. ALL DUCTILE IRON FITTINGS SHALL BE MECHANICAL JOINT AND SHALL BE RESTRAINED WITH EEBA IRON SERIES MEGALUG, OR APPROVED EQUAL UNLESS OTHERWISE SHOWN IN PLANS.
11. CONTRACTOR SHALL BE RESPONSIBLE FOR INSTALLING VERTICAL FITTINGS FOR 8" PIPE AS REQUIRED. COST SHALL BE SUBSIDIARY TO THE 6" AND 8" WATER LINE BID ITEMS.
12. CONTRACTOR SHALL MAINTAIN CONTINUOUS WATER SERVICE TO ALL CUSTOMERS DURING CONSTRUCTION. TEMPORARY WATER SERVICE, IF REQUIRED, SHALL BE PROVIDED USING OWNER-APPROVED METHODS. TEMPORARY WATER LINES SHALL MATCH THE DIAMETER OF THE LINE TAKEN OUT OF SERVICE.
13. EXISTING STORM SEWER FACILITIES DESIGNATED FOR REMOVAL AS PART OF THIS PROJECT SHALL BE REMOVED AND ABANDONED PRIOR TO INSTALLATION OF THE PROPOSED WATER LINE.
14. THE CONTRACTOR SHALL REMOVE AND PROPERLY DISPOSE OF ALL MATERIALS REMOVED AS PART OF THE WORK AT NO ADDITIONAL COST TO THE OWNER.

!!WARNING!!

EXISTING UTILITIES IN THE AREA. CONTRACTOR SHALL FIELD VERIFY THE LOCATION OF ALL EXISTING UTILITIES WITH THE PROVIDER PRIOR TO START OF CONSTRUCTION AND SHALL IMMEDIATELY NOTIFY THE ENGINEER OF ANY CONFLICTS DISCOVERED. CONTRACTOR IS RESPONSIBLE FOR COORDINATING UTILITY RELOCATION WHERE NECESSARY AND PROTECTING EXISTING UTILITIES (SHOWN OR NOT SHOWN). IF ANY EXISTING UTILITIES ARE DAMAGED, THE CONTRACTOR SHALL REPLACE THEM AT THEIR OWN EXPENSE.

811 Know what's below. Call before you dig.

No.	REVISIONS	DATE	BY

PROJECT NO. C00057/ BID NO. 27-31

Kimley»Horn
225 E. JOHN W. CARPENTER FREEWAY SUITE 1100
IRVING, TX 75062
PHONE: 214.565.0660
WWW.KIMLEY-HORN.COM
© 2026 KIMLEY-HORN AND ASSOCIATES, INC.
TEXAS REGISTERED ENGINEERING FIRM F-928

11/06/2026

STATE OF TEXAS
HANNAH G. WOOD
162206
LICENSED
PROFESSIONAL ENGINEER

KHA PROJECT 063543066	DATE 11/06/2026	SCALE AS SHOWN	DESIGNED BY HGW	DRAWN BY CJS	CHECKED BY LMW

ADDISON
ADDISON JUNCTION PUBLIC INFRASTRUCTURE IMPROVEMENTS

WATER
WATER LINE 1
BEGIN TO STA 5+00

SHEET NUMBER
73

Plotted By: Christopher Lyon November 06, 2026 - 04:22:37pm G:\ACAD\ACDocs\Primary\Non\063543066-ADDISON JUNCTION PUBLIC\Project Files\CAD\PlanSheets\WATER-FESTIVAL WAY.dwg
This document, together with the concepts and designs presented herein, as an instrument of service, is intended only for the specific purpose and client for which it was prepared. Reuse of and improper reliance on this document without written authorization and adaptation by Kimley-Horn and Associates, Inc. shall be without liability to Kimley-Horn and Associates, Inc.

Plotted By: Christens, Ian - November 06, 2025 - 04:23:38pm C:\ACCWork\ian.christens@kimley-horn.com\D6343056-ADDISON JUNCTION PUBLIC\Project Files\C400\Plan Sheets\WATER-FESTIVAL WAY.dwg
This document, together with the concepts and designs presented herein, as an instrument of service, is intended only for the specific purpose and client for which it was prepared. Reuse of and improper reliance on this document without written authorization and adaptation by Kimley-Horn and Associates, Inc. shall be without liability to Kimley-Horn and Associates, Inc.

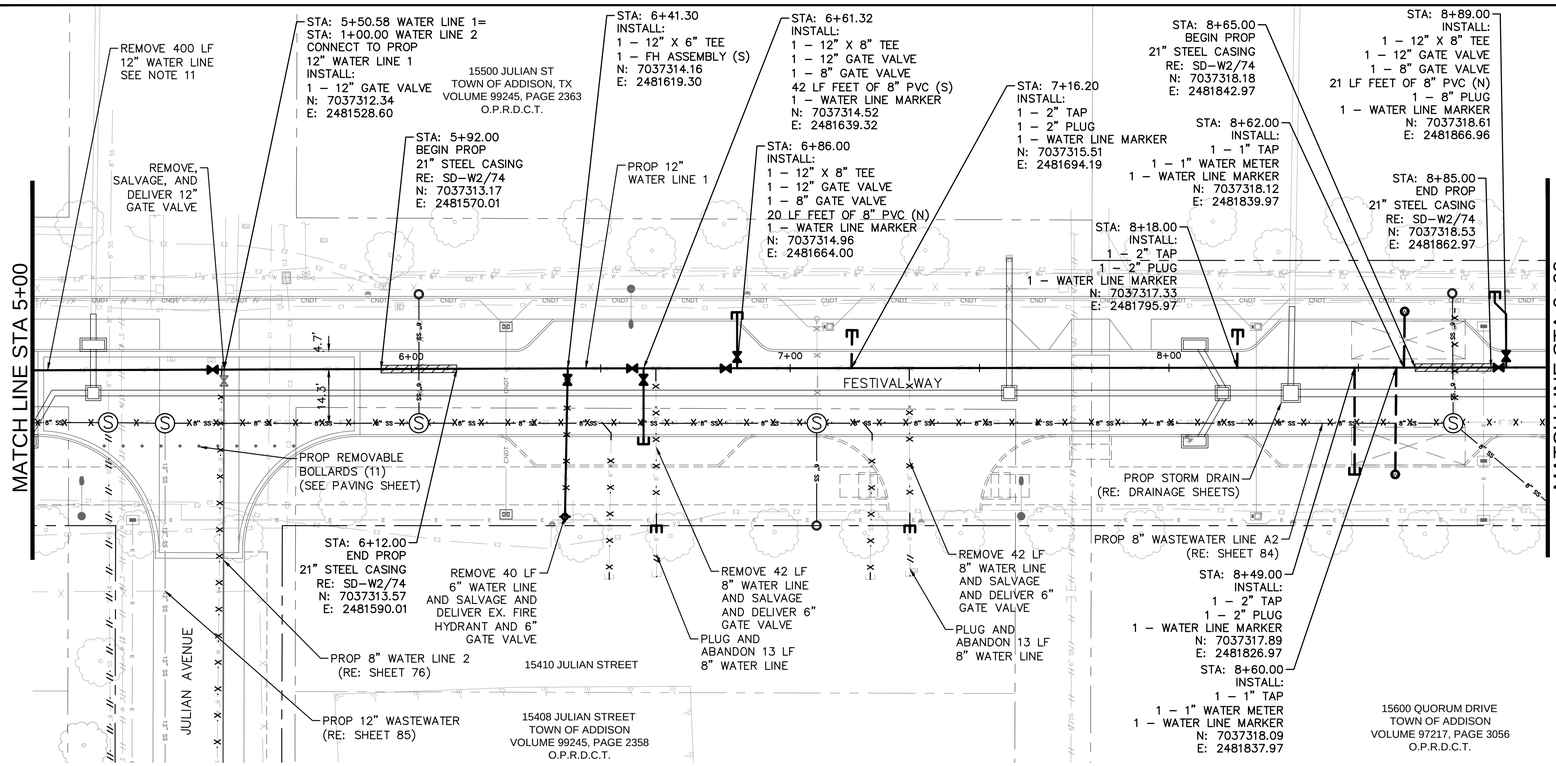

12" WATER LINE 1

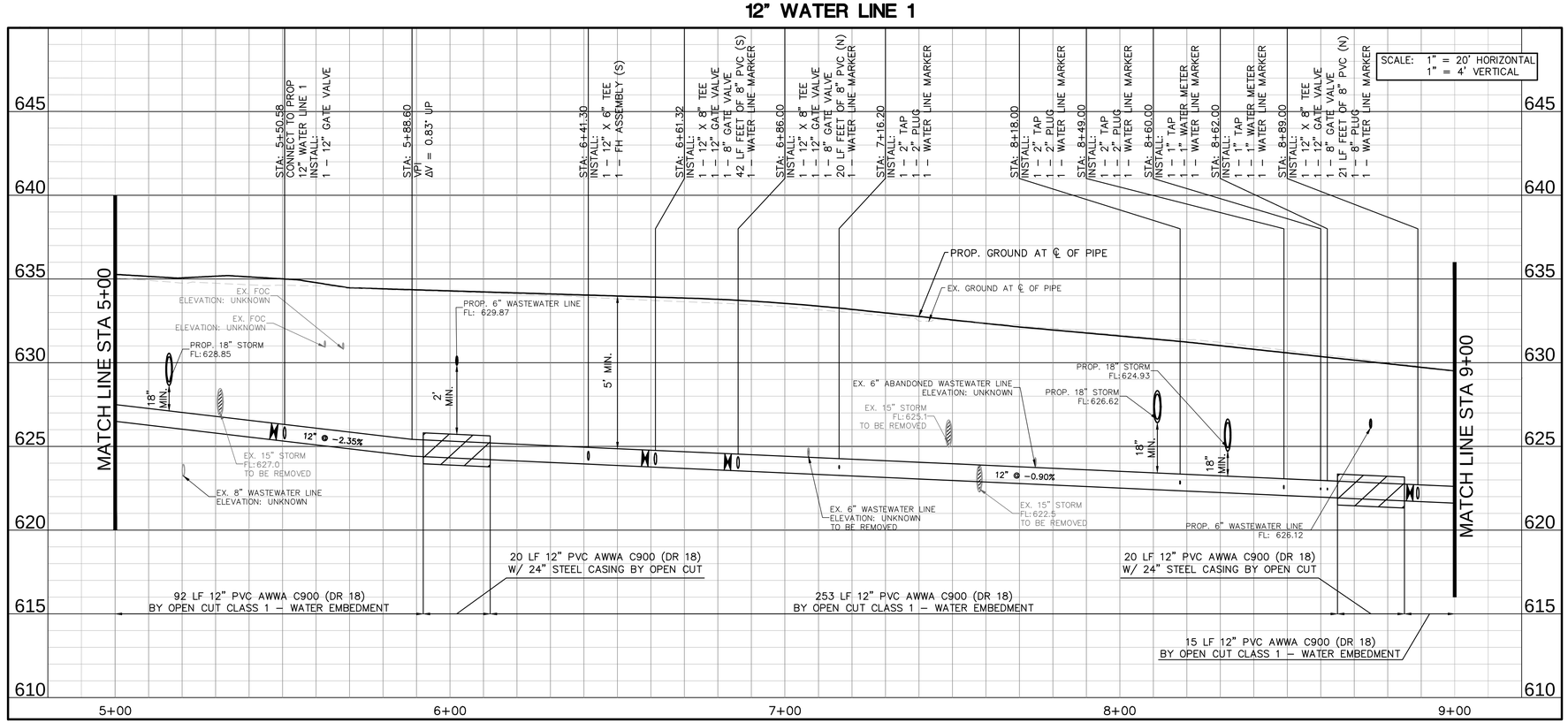

UTILITY LEGEND

- PROP WATER LINE
- PROP 1" & 2" WATER SERVICE
- PROP FIRE HYDRANT
- PROP WATER VALVE
- PROP BORE WITH STEEL CASING
- PROP WASTEWATER LINE
- PROP. SANITARY SEWER MANHOLE
- EXISTING WATER LINE
- EXISTING FIRE HYDRANT
- EXISTING WATER VALVE
- EXISTING SANITARY SEWER LINE
- EXSITING SANITARY SEWER MANHOLE
- EXISTING STORM SEWER LINE
- EXISTING STORM MANHOLE
- EXISTING OVERHEAD POWER LINE
- EXISTING POWER POLE
- EXSITING FENCE
- EXISTING TREE
- ABANDON EXISTING PIPING
- REMOVE EXISTING PIPING

GRAPHIC SCALE IN FEET 0 10 20 40

NORTH

- EXISTING AT&T FIBER
- EXISTING EXTENET COMM.
- EXISTING FIBERLIGHT COMM.
- EXISTING LOGIX COMM.
- EXISTING MCI COMM.
- EXISTING SPECTRUM COMM.
- EXISTING SPECTRUM FIBER.
- EXISTING LUMEN FIBER
- EXISTING GAS
- EXISTING ONCOR ELECTRIC
- EXISTING PRIVATE ELECTRIC
- TREE REMOVAL

NOTES:

1. CONTRACTOR TO FIELD VERIFY VERTICAL AND HORIZONTAL LOCATION OF EXISTING UTILITIES PRIOR TO CONSTRUCTION.
2. CONTRACTOR TO LOCATE ALL SERVICE LATERALS AND WATER METERS PRIOR TO CONSTRUCTION TO ENSURE SERVICE IS MAINTAINED.
4. TOWN OF ADDISON STAFF SHALL OPERATE ALL EXISTING WATER SYSTEM VALVES. CONTRACTOR SHALL COORDINATE WITH THE TOWN A MINIMUM OF 72 HOURS PRIOR TO ANY WORK REQUIRING VALVE OPERATION, SYSTEM SHUTDOWN, CONNECTION TO THE EXISTING SYSTEM, OR TESTING AFFECTING THE EXISTING SYSTEM. NO SHUTDOWN OR CONNECTION SHALL OCCUR WITHOUT PRIOR TOWN APPROVAL. CONTRACTOR SHALL HAVE ALL REQUIRED MATERIALS, EQUIPMENT, PERSONNEL, AND TEMPORARY FACILITIES IN PLACE PRIOR TO INITIATING A SHUTDOWN. CONTRACTOR SHALL COORDINATE TESTING WITH THE TOWN AND SHALL CORRECT AND RETEST ANY DEFICIENCIES PRIOR TO PLACING THE AFFECTED FACILITIES INTO SERVICE. THE TOWN RESERVES THE RIGHT TO DELAY WORK IF CONDITIONS ARE NOT ACCEPTABLE TO PROCEED.
5. PROVIDE CONCRETE THRUST BLOCKS AT ALL BENDS, TEES, WYES, VALVES, AND HYDRANTS. VERTICAL BENDS DOWN SHALL UTILIZE RESTRAINED JOINTS; PROVIDE ADDITIONAL RESTRAINED JOINTS WHERE SHOWN ON THE PLANS. POLYWRAP ALL FITTINGS WITH 8-MIL POLYETHYLENE PRIOR TO CONCRETE PLACEMENT. THRUST BLOCKS SHALL BE MINIMUM CLASS "B" (3,000 PSI) CONCRETE, DESIGNED FOR A 200 PSI TEST PRESSURE, AND PLACED AGAINST UNDISTURBED EARTH WITH FORMS AS REQUIRED TO KEEP FLANGES, GLANDS, AND BOLTS ACCESSIBLE. CONSTRUCT THRUST RESTRAINTS IN ACCORDANCE WITH CURRENT NCTCOG STANDARDS.
6. FIRE HYDRANT ASSEMBLY INCLUDES ALL FITTINGS, TEES, PIPES, AND VALVES.
7. CONTRACTOR SHALL ONLY HAVE ONE FIRE HYDRANT OUT OF SERVICE AT ANY TIME DURING CONSTRUCTION.
8. CONTRACTOR TO BRACE ELECTRIC CONDUIT DURING CONSTRUCTION.
9. THE CONTRACTOR SHALL BE RESPONSIBLE FOR MAKING THE WATER LINE CONNECTIONS AS SPECIFIED IN THE PLANS. ANY ADDITIONAL PIPE, FITTINGS, OR MATERIALS NOT SPECIFICALLY SHOWN IN THE PLANS BUT NEEDED TO MAKE THE CONNECTIONS SHALL BE CONSIDERED SUBSIDIARY TO THE PROJECT COST AND REFLECTED IN THE UNIT BID PRICES FOR THE VARIOUS BID ITEMS LISTED IN THE PROPOSAL.
10. ALL DUCTILE IRON FITTINGS, VALVES, FIRE HYDRANTS AND OTHER METAL APPURTENANCES LOCATED BELOW GROUND SHALL BE WRAPPED IN POLYETHYLENE. ALL DUCTILE IRON FITTINGS SHALL BE MECHANICAL JOINT AND SHALL BE RESTRAINED WITH EEBA IRON SERIES MEGALUG, OR APPROVED EQUAL UNLESS OTHERWISE SHOWN IN PLANS.
11. CONTRACTOR SHALL BE RESPONSIBLE FOR INSTALLING VERTICAL FITTINGS FOR 8" PIPE AS REQUIRED. COST SHALL BE SUBSIDIARY TO THE 6" AND 8" WATER LINE BID ITEMS.
12. CONTRACTOR SHALL MAINTAIN CONTINUOUS WATER SERVICE TO ALL CUSTOMERS DURING CONSTRUCTION. TEMPORARY WATER SERVICE, IF REQUIRED, SHALL BE PROVIDED USING OWNER-APPROVED METHODS. TEMPORARY WATER LINES SHALL MATCH THE DIAMETER OF THE LINE TAKEN OUT OF SERVICE.
13. EXISTING STORM SEWER FACILITIES DESIGNATED FOR REMOVAL AS PART OF THIS PROJECT SHALL BE REMOVED AND ABANDONED PRIOR TO INSTALLATION OF THE PROP WATER LINE.
14. THE CONTRACTOR SHALL REMOVE AND PROPERLY DISPOSE OF ALL MATERIALS REMOVED AS PART OF THE WORK AT NO ADDITIONAL COST TO THE OWNER.

!!WARNING!!

EXISTING UTILITIES IN THE AREA. CONTRACTOR SHALL FIELD VERIFY THE LOCATION OF ALL EXISTING UTILITIES WITH THE PROVIDER PRIOR TO START OF CONSTRUCTION AND SHALL IMMEDIATELY NOTIFY THE ENGINEER OF ANY CONFLICTS DISCOVERED. CONTRACTOR IS RESPONSIBLE FOR COORDINATING UTILITY RELOCATION WHERE NECESSARY AND PROTECTING EXISTING UTILITIES (SHOWN OR NOT SHOWN). IF ANY EXISTING UTILITIES ARE DAMAGED, THE CONTRACTOR SHALL REPLACE THEM AT THEIR OWN EXPENSE.

811 Know what's **below.** **Call** before you dig.

No.	REVISIONS	DATE	BY

PROJECT NO. C00057/ BID NO. 27-31

Kimley»Horn
225 E. JOHN W. CARPENTER FREEWAY SUITE 1100
IRVING, TX 75062
PHONE: 214-565-0100
WWW.KIMLEY-HORN.COM
© 2026 KIMLEY-HORN AND ASSOCIATES, INC.
TEXAS REGISTERED ENGINEERING FIRM #F-928

11/06/2026

STATE OF TEXAS
HANNAH G. WOOD
162206
LICENSED
PROFESSIONAL ENGINEER

KHA PROJECT 063543066			
DATE 11/06/2026	SCALE	AS SHOWN	
	DESIGNED BY	HGW	CJS
	DRAWN BY	CJS	LMW
	CHECKED BY	LMW	

ADDISON
ADDISON JUNCTION
PUBLIC
INFRASTRUCTURE
IMPROVEMENTS

WATER
WATER LINE 1
STA 5+00 TO STA 9+00

SHEET NUMBER
74

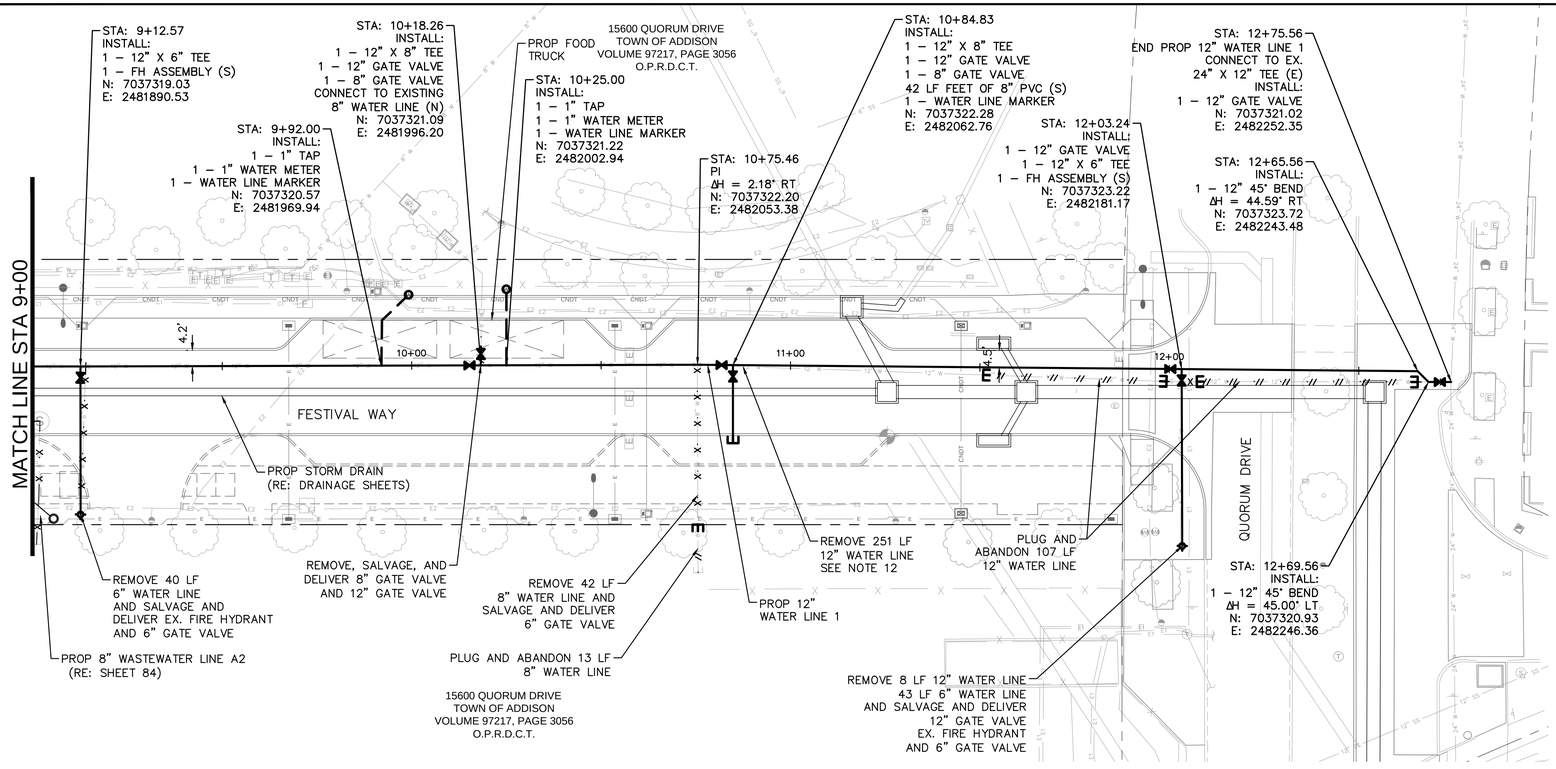

12" WATER LINE 1

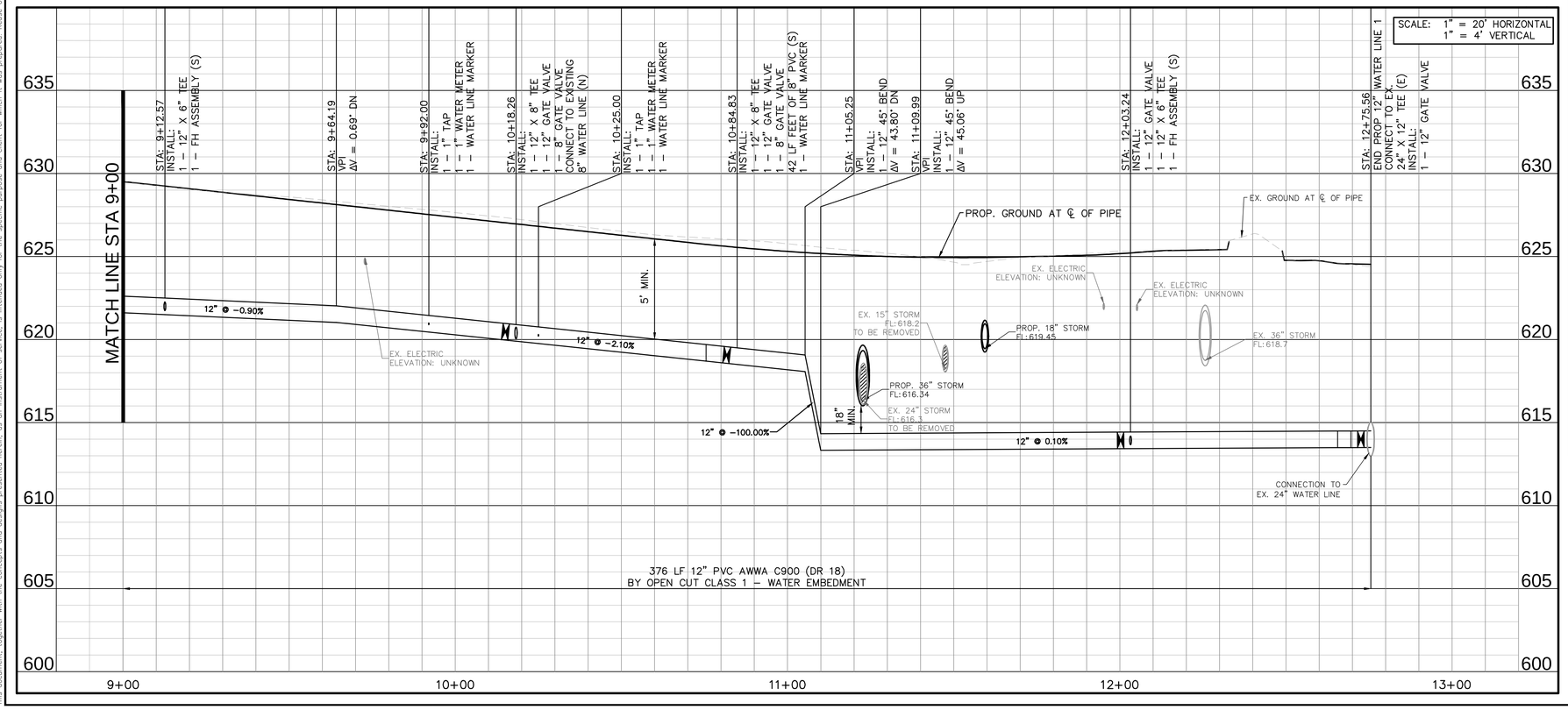

UTILITY LEGEND

- PROP WATER LINE
- PROP 1" & 2" WATER SERVICE
- PROP FIRE HYDRANT
- PROP WATER VALVE
- PROP BORE WITH STEEL CASING
- PROP WASTEWATER LINE
- PROP. SANITARY SEWER MANHOLE
- EXISTING WATER LINE
- EXISTING FIRE HYDRANT
- EXISTING WATER VALVE
- EXISTING SANITARY SEWER LINE
- EXSITING SANITARY SEWER MANHOLE
- EXISTING STORM SEWER LINE
- EXISTING STORM MANHOLE
- EXISTING OVERHEAD POWER LINE
- EXISTING POWER POLE
- EXSITING FENCE
- EXISTING TREE
- ABANDON EXISTING PIPING
- REMOVE EXISTING PIPING

GRAPHIC SCALE IN FEET
0 10 20 40

NORTH

- EXISTING AT&T FIBER
- EXISTING EXTENET COMM.
- EXISTING FIBERLIGHT COMM.
- EXISTING LOGIX COMM.
- EXISTING MCI COMM.
- EXISTING SPECTRUM COMM.
- EXISTING SPECTRUM FIBER.
- EXISTING LUMEN FIBER
- EXISTING GAS
- EXISTING ONCOR ELECTRIC
- EXISTING PRIVATE ELECTRIC
- TREE REMOVAL

NOTES:

1. CONTRACTOR SHALL EXPOSE AND FIELD VERIFY VERTICAL AND HORIZONTAL LOCATION OF EXISTING 24" X 12" TEE PRIOR TO CONSTRUCTION. CONTRACTOR SHALL NOTIFY ENGINEER IF LOCATION VARIES FROM WHAT IS SHOWN IN PLANS.
2. CONTRACTOR TO FIELD VERIFY VERTICAL AND HORIZONTAL LOCATION OF EXISTING UTILITIES PRIOR TO CONSTRUCTION.
3. CONTRACTOR TO LOCATE ALL SERVICE LATERALS AND WATER METERS PRIOR TO CONSTRUCTION TO ENSURE SERVICE IS MAINTAINED.
4. TOWN OF ADDISON STAFF SHALL OPERATE ALL EXISTING WATER SYSTEM VALVES. CONTRACTOR SHALL COORDINATE WITH THE TOWN A MINIMUM OF [XX] HOURS PRIOR TO ANY WORK REQUIRING VALVE OPERATION, SYSTEM SHUTDOWN, CONNECTION TO THE EXISTING SYSTEM, OR TESTING AFFECTING THE EXISTING SYSTEM. NO SHUTDOWN OR CONNECTION SHALL OCCUR WITHOUT PRIOR TOWN APPROVAL. CONTRACTOR SHALL HAVE ALL REQUIRED MATERIALS, EQUIPMENT, PERSONNEL, AND TEMPORARY FACILITIES IN PLACE PRIOR TO INITIATING A SHUTDOWN. CONTRACTOR SHALL COORDINATE TESTING WITH THE TOWN AND SHALL CORRECT AND RETEST ANY DEFICIENCIES PRIOR TO PLACING THE AFFECTED FACILITIES INTO SERVICE. THE TOWN RESERVES THE RIGHT TO DELAY WORK IF CONDITIONS ARE NOT ACCEPTABLE TO PROCEED.
5. PROVIDE CONCRETE THRUST BLOCKS AT ALL BENDS, TEES, WYES, VALVES, AND HYDRANTS. VERTICAL BENDS DOWN SHALL UTILIZE RESTRAINED JOINTS; PROVIDE ADDITIONAL RESTRAINED JOINTS WHERE SHOWN ON THE PLANS. POLYWRAP ALL FITTINGS WITH 8-MIL POLYETHYLENE PRIOR TO CONCRETE PLACEMENT. THRUST BLOCKS SHALL BE MINIMUM CLASS "B" (3,000 PSI) CONCRETE, DESIGNED FOR A 200 PSI TEST PRESSURE, AND PLACED AGAINST UNDISTURBED EARTH WITH FORMS AS REQUIRED TO KEEP FLANGES, GLANDS, AND BOLTS ACCESSIBLE. CONSTRUCT THRUST RESTRAINTS IN ACCORDANCE WITH CURRENT NCTCOG STANDARDS.
6. FIRE HYDRANT ASSEMBLY INCLUDES ALL FITTINGS, TEES, PIPES, AND VALVES.
7. CONTRACTOR SHALL ONLY HAVE ONE FIRE HYDRANT OUT OF SERVICE AT ANY TIME DURING CONSTRUCTION.
8. CONTRACTOR TO BRACE ELECTRIC CONDUIT DURING CONSTRUCTION.
9. THE CONTRACTOR SHALL BE RESPONSIBLE FOR MAKING THE WATER LINE CONNECTIONS AS SPECIFIED IN THE PLANS. ANY ADDITIONAL PIPE, FITTINGS, OR MATERIALS NOT SPECIFICALLY SHOWN IN THE PLANS BUT NEEDED TO MAKE THE CONNECTIONS SHALL BE CONSIDERED SUBSIDIARY TO THE PROJECT COST AND REFLECTED IN THE UNIT BID PRICES FOR THE VARIOUS BID ITEMS LISTED IN THE PROPOSAL.
10. ALL DUCTILE IRON FITTINGS, VALVES, FIRE HYDRANTS AND OTHER METAL APPURTENANCES LOCATED BELOW GROUND SHALL BE WRAPPED IN POLYETHYLENE. ALL DUCTILE IRON FITTINGS SHALL BE MECHANICAL JOINT AND SHALL BE RESTRAINED WITH EEBA IRON SERIES MEGALUG, OR APPROVED EQUAL UNLESS OTHERWISE SHOWN IN PLANS.
11. CONTRACTOR SHALL BE RESPONSIBLE FOR INSTALLING VERTICAL FITTINGS FOR 8" PIPE AS REQUIRED. COST SHALL BE SUBSIDIARY TO THE 6" AND 8" WATER LINE BID ITEMS.
12. CONTRACTOR SHALL MAINTAIN CONTINUOUS WATER SERVICE TO ALL CUSTOMERS DURING CONSTRUCTION. TEMPORARY WATER SERVICE, IF REQUIRED, SHALL BE PROVIDED USING OWNER-APPROVED METHODS. TEMPORARY WATER LINES SHALL MATCH THE DIAMETER OF THE LINE TAKEN OUT OF SERVICE.
13. THE CONTRACTOR SHALL REMOVE AND PROPERLY DISPOSE OF ALL MATERIALS REMOVED AS PART OF THE WORK AT NO ADDITIONAL COST TO THE OWNER.

!!WARNING!!

EXISTING UTILITIES IN THE AREA. CONTRACTOR SHALL FIELD VERIFY THE LOCATION OF ALL EXISTING UTILITIES WITH THE PROVIDER PRIOR TO START OF CONSTRUCTION AND SHALL IMMEDIATELY NOTIFY THE ENGINEER OF ANY CONFLICTS DISCOVERED. CONTRACTOR IS RESPONSIBLE FOR COORDINATING UTILITY RELOCATION WHERE NECESSARY AND PROTECTING EXISTING UTILITIES (SHOWN OR NOT SHOWN). IF ANY EXISTING UTILITIES ARE DAMAGED, THE CONTRACTOR SHALL REPLACE THEM AT THEIR OWN EXPENSE.

811 Know what's **below.** **Call** before you dig.

No.	REVISIONS	DATE	BY

PROJECT NO. C00057/ BID NO. 27-31

Kimley»Horn
225 E. JOHN W. CARPENTER FREEWAY SUITE 1100
IRVING, TX 75062
PHONE: 214-369-6500
WWW.KIMLEY-HORN.COM

© 2026 KIMLEY-HORN AND ASSOCIATES, INC.
TEXAS REGISTERED ENGINEERING FIRM #F-928

11/06/2026

STATE OF TEXAS
HANNAH G. WOOD
162206
LICENSED
PROFESSIONAL ENGINEER

KHA PROJECT 063543066	DATE 11/06/2026	SCALE AS SHOWN	DESIGNED BY HGW	DRAWN BY CJS	CHECKED BY LMW

ADDISON
ADDISON JUNCTION
PUBLIC
INFRASTRUCTURE
IMPROVEMENTS

WATER
WATER LINE 1
STA 9+00 TO END

SHEET NUMBER
75

Plotted By: Stephanie Ipe - November 06, 2025 - 04:22:44pm G:\ACD\ACDocs\Wmp\Addison\063543GE-ADDISON JUNCTION PUBLIC\Project Files\CAD\PlanSheets\WATER-FESTIVAL WAY.dwg
This document, together with the concepts and designs presented herein, as an instrument of service, is intended only for the specific purpose and client for which it was prepared. Reuse of and improper reliance on this document without written authorization and adaptation by Kimley-Horn and Associates, Inc. shall be without liability to Kimley-Horn and Associates, Inc.

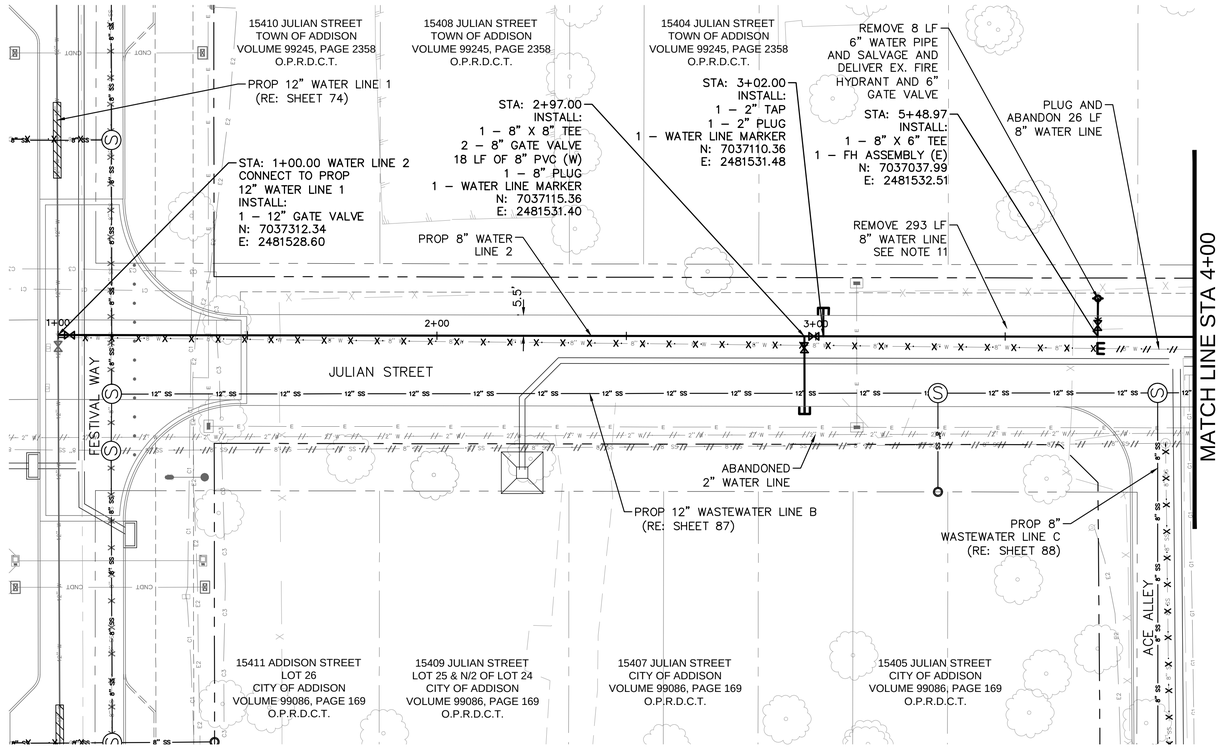

8" WATER LINE 2

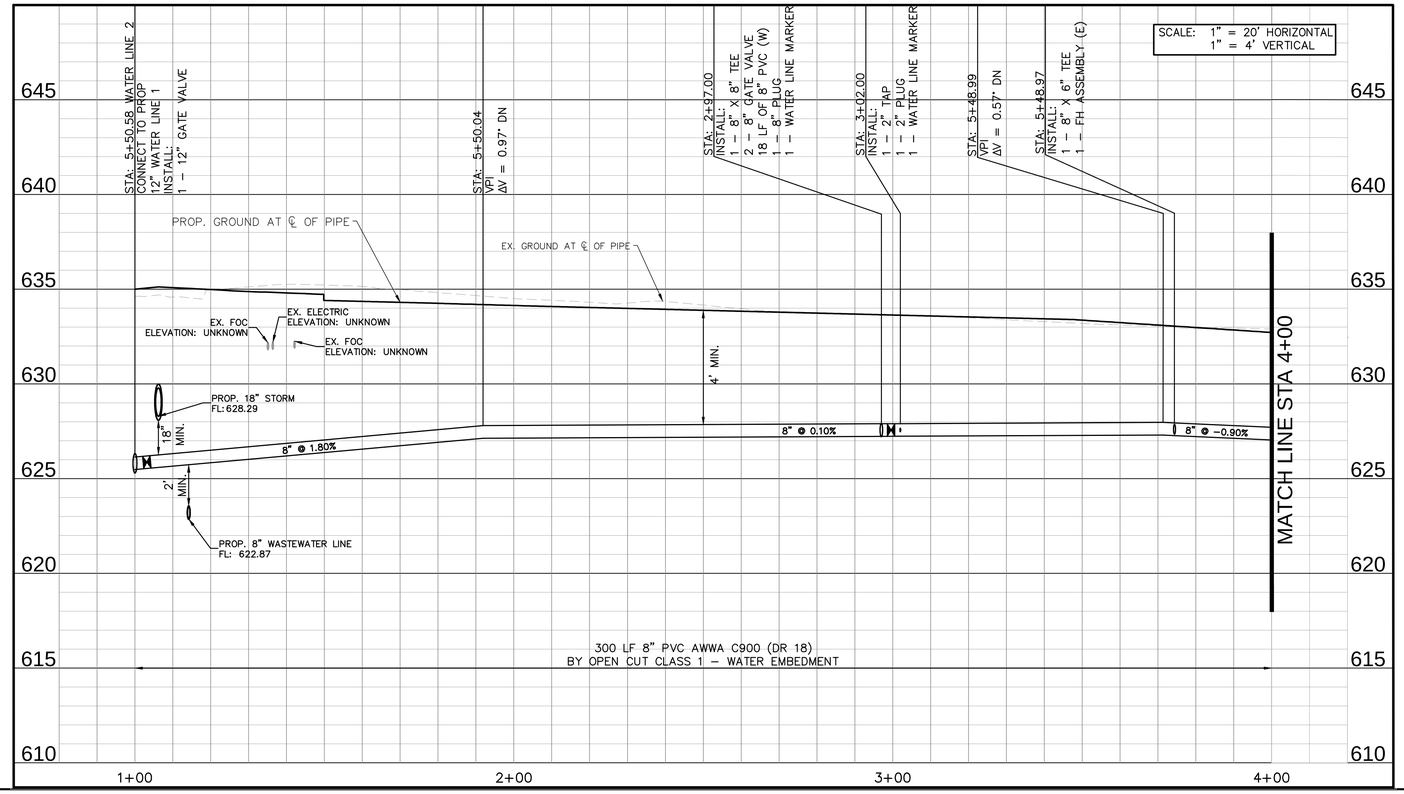

UTILITY LEGEND

- PROP WATER LINE
- PROP 1" & 2" WATER SERVICE
- PROPOSED FIRE HYDRANT
- PROPOSED WATER VALVE
- PROPOSED BORE WITH STEEL CASING
- PROPOSED WASTEWATER LINE
- PROP. SANITARY SEWER MANHOLE
- EXISTING WATER LINE
- EXISTING FIRE HYDRANT
- EXISTING WATER VALVE
- EXISTING SANITARY SEWER LINE
- EXSITING SANITARY SEWER MANHOLE
- EXISTING STORM SEWER LINE
- EXISTING STORM MANHOLE
- EXISTING OVERHEAD POWER LINE
- EXISTING POWER POLE
- EXSITING FENCE
- EXISTING TREE
- ABANDON EXISTING PIPING
- REMOVE EXISTING PIPING

GRAPHIC SCALE IN FEET
0 10 20 40
NORTH

- EXISTING AT&T FIBER
- EXISTING EXTENET COMM.
- EXISTING FIBERLIGHT COMM.
- EXISTING LOGIX COMM.
- EXISTING MCI COMM.
- EXISTING SPECTRUM COMM.
- EXISTING SPECTRUM FIBER.
- EXISTING LUMEN FIBER
- EXISTING GAS
- EXISTING ONCOR ELECTRIC
- EXISTING PRIVATE ELECTRIC
- TREE REMOVAL

NOTES:

1. CONTRACTOR TO FIELD VERIFY LOCATION OF EXISTING UTILITIES PRIOR TO CONSTRUCTION.
2. CONTRACTOR TO LOCATE ALL SERVICE LATERALS AND WATER METERS PRIOR TO CONSTRUCTION TO ENSURE SERVICE IS MAINTAINED.
3. TOWN OF ADDISON STAFF SHALL OPERATE ALL EXISTING WATER SYSTEM VALVES. CONTRACTOR SHALL COORDINATE WITH THE TOWN A MINIMUM OF [XX] HOURS PRIOR TO ANY WORK REQUIRING VALVE OPERATION, SYSTEM SHUTDOWN, CONNECTION TO THE EXISTING SYSTEM, OR TESTING AFFECTING THE EXISTING SYSTEM. NO SHUTDOWN OR CONNECTION SHALL OCCUR WITHOUT PRIOR TOWN APPROVAL. CONTRACTOR SHALL HAVE ALL REQUIRED MATERIALS, EQUIPMENT, PERSONNEL, AND TEMPORARY FACILITIES IN PLACE PRIOR TO INITIATING A SHUTDOWN. CONTRACTOR SHALL COORDINATE TESTING WITH THE TOWN AND SHALL CORRECT AND RETEST ANY DEFICIENCIES PRIOR TO PLACING THE AFFECTED FACILITIES INTO SERVICE. THE TOWN RESERVES THE RIGHT TO DELAY WORK IF CONDITIONS ARE NOT ACCEPTABLE TO PROCEED.
4. PROVIDE CONCRETE THRUST BLOCKS AT ALL BENDS, TEES, WYES, VALVES, AND HYDRANTS. VERTICAL BENDS DOWN SHALL UTILIZE RESTRAINED JOINTS; PROVIDE ADDITIONAL RESTRAINED JOINTS WHERE SHOWN ON THE PLANS. POLYWRAP ALL FITTINGS WITH 8-MIL POLYETHYLENE PRIOR TO CONCRETE PLACEMENT. THRUST BLOCKS SHALL BE MINIMUM CLASS "B" (3,000 PSI) CONCRETE, DESIGNED FOR A 200 PSI TEST PRESSURE, AND PLACED AGAINST UNDISTURBED EARTH WITH FORMS AS REQUIRED TO KEEP FLANGES, GLANDS, AND BOLTS ACCESSIBLE. CONSTRUCT THRUST RESTRAINTS IN ACCORDANCE WITH CURRENT NCTCOG STANDARDS.
5. FIRE HYDRANT ASSEMBLY INCLUDES ALL FITTINGS, TEES, PIPES, AND VALVES.
6. CONTRACTOR SHALL ONLY HAVE ONE FIRE HYDRANT OUT OF SERVICE AT ANY TIME DURING CONSTRUCTION.
7. CONTRACTOR TO BRACE ELECTRIC CONDUIT DURING CONSTRUCTION.
8. THE CONTRACTOR SHALL BE RESPONSIBLE FOR MAKING THE WATER LINE CONNECTIONS AS SPECIFIED IN THE PLANS. ANY ADDITIONAL PIPE, FITTINGS, OR MATERIALS NOT SPECIFICALLY SHOWN IN THE PLANS BUT NEEDED TO MAKE THE CONNECTIONS SHALL BE CONSIDERED SUBSIDIARY TO THE PROJECT COST AND REFLECTED IN THE UNIT BID PRICES FOR THE VARIOUS BID ITEMS LISTED IN THE PROPOSAL.
9. ALL DUCTILE IRON FITTINGS, VALVES, FIRE HYDRANTS AND OTHER METAL APPURTENANCES LOCATED BELOW GROUND SHALL BE WRAPPED IN POLYETHYLENE. ALL DUCTILE IRON FITTINGS SHALL BE MECHANICAL JOINT AND SHALL BE RESTRAINED WITH EEBA IRON SERIES MEGALUG, OR APPROVED EQUAL UNLESS OTHERWISE SHOWN IN PLANS.
10. CONTRACTOR SHALL BE RESPONSIBLE FOR INSTALLING VERTICAL FITTINGS FOR 8" PIPE AS REQUIRED. COST SHALL BE SUBSIDIARY TO THE 6" AND 8" WATER LINE BID ITEMS.
11. CONTRACTOR SHALL MAINTAIN CONTINUOUS WATER SERVICE TO ALL CUSTOMERS DURING CONSTRUCTION. TEMPORARY WATER SERVICE, IF REQUIRED, SHALL BE PROVIDED USING OWNER-APPROVED METHODS. TEMPORARY WATER LINES SHALL MATCH THE DIAMETER OF THE LINE TAKEN OUT OF SERVICE.
12. EXISTING STORM SEWER FACILITIES DESIGNATED FOR REMOVAL AS PART OF THIS PROJECT SHALL BE REMOVED AND ABANDONED PRIOR TO INSTALLATION OF THE PROPOSED WATER LINE.
13. THE CONTRACTOR SHALL REMOVE AND PROPERLY DISPOSE OF ALL MATERIALS REMOVED AS PART OF THE WORK AT NO ADDITIONAL COST TO THE OWNER.

!!WARNING!!

EXISTING UTILITIES IN THE AREA. CONTRACTOR SHALL FIELD VERIFY THE LOCATION OF ALL EXISTING UTILITIES WITH THE PROVIDER PRIOR TO START OF CONSTRUCTION AND SHALL IMMEDIATELY NOTIFY THE ENGINEER OF ANY CONFLICTS DISCOVERED. CONTRACTOR IS RESPONSIBLE FOR COORDINATING UTILITY RELOCATION WHERE NECESSARY AND PROTECTING EXISTING UTILITIES (SHOWN OR NOT SHOWN). IF ANY EXISTING UTILITIES ARE DAMAGED, THE CONTRACTOR SHALL REPLACE THEM AT THEIR OWN EXPENSE.

811 Know what's **below.** **Call** before you dig.

No.	REVISIONS	DATE	BY

PROJECT NO. C00057/ BID NO. 27-31

Kimley»Horn
225 E. JOHN W. CARPENTER FREEWAY SUITE 1100
IRVING, TX 75062
PHONE: 214.565.0660
WWW.KIMLEY-HORN.COM
© 2026 KIMLEY-HORN AND ASSOCIATES, INC.
TEXAS REGISTERED ENGINEERING FIRM #F-928

11/06/2026

STATE OF TEXAS
HANNAH G. WOOD
162206
LICENSED
PROFESSIONAL ENGINEER

KHA PROJECT			
063543066			
DATE	SCALE	AS SHOWN	
11/06/2026	DESIGNED BY	HGW	
	DRAWN BY	CIS	
	CHECKED BY	LMW	

ADDISON
ADDISON JUNCTION
PUBLIC
INFRASTRUCTURE
IMPROVEMENTS

WATER
WATER LINE 2
BEGIN TO STA 4+00

SHEET NUMBER
76

Plotted By: Stephanie Lin November 06, 2025 04:23:50pm G:\ACS\ACSDocs\Workfiles\063543066-ADDISON JUNCTION PUBLIC\Project Files\2400 PlanSheets\WATER-JULIAN AVENUE.dwg
This document, together with the concepts and designs presented herein, as an instrument of service, is intended only for the specific purpose and client for which it was prepared. Reuse of and improper reliance on this document without written authorization and adaptation by Kimley-Horn and Associates, Inc. shall be without liability to Kimley-Horn and Associates, Inc.

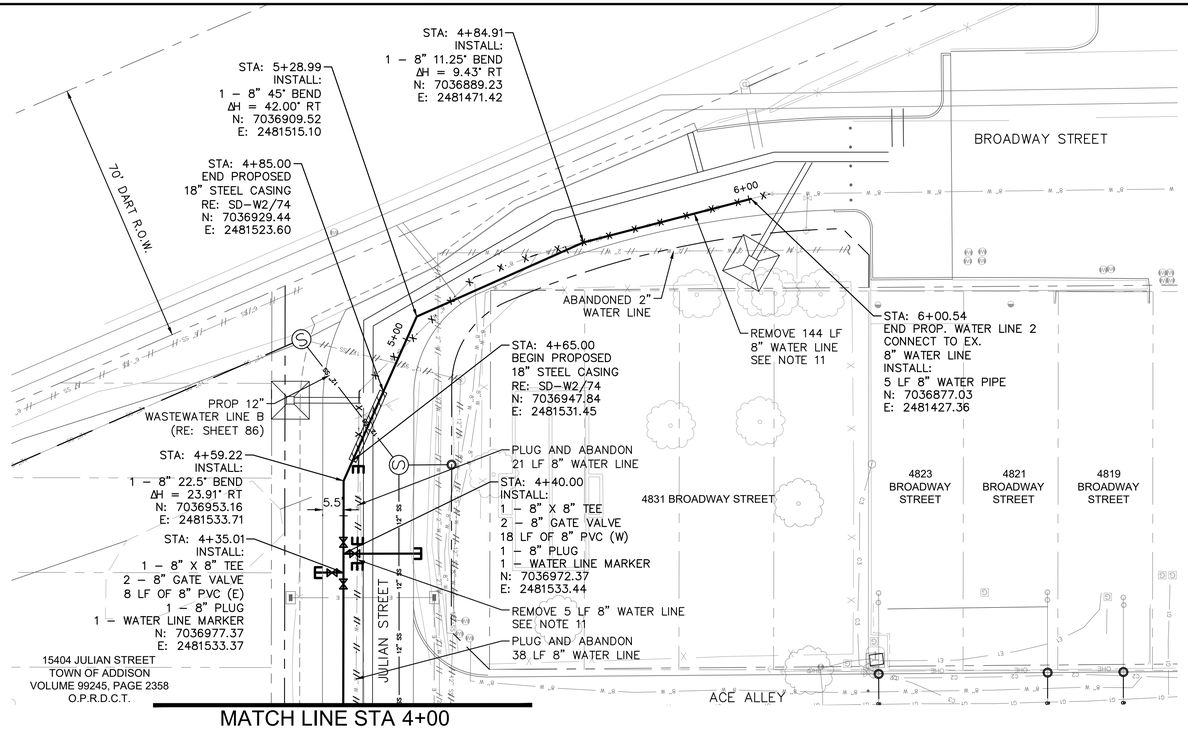

8" WATER LINE 2

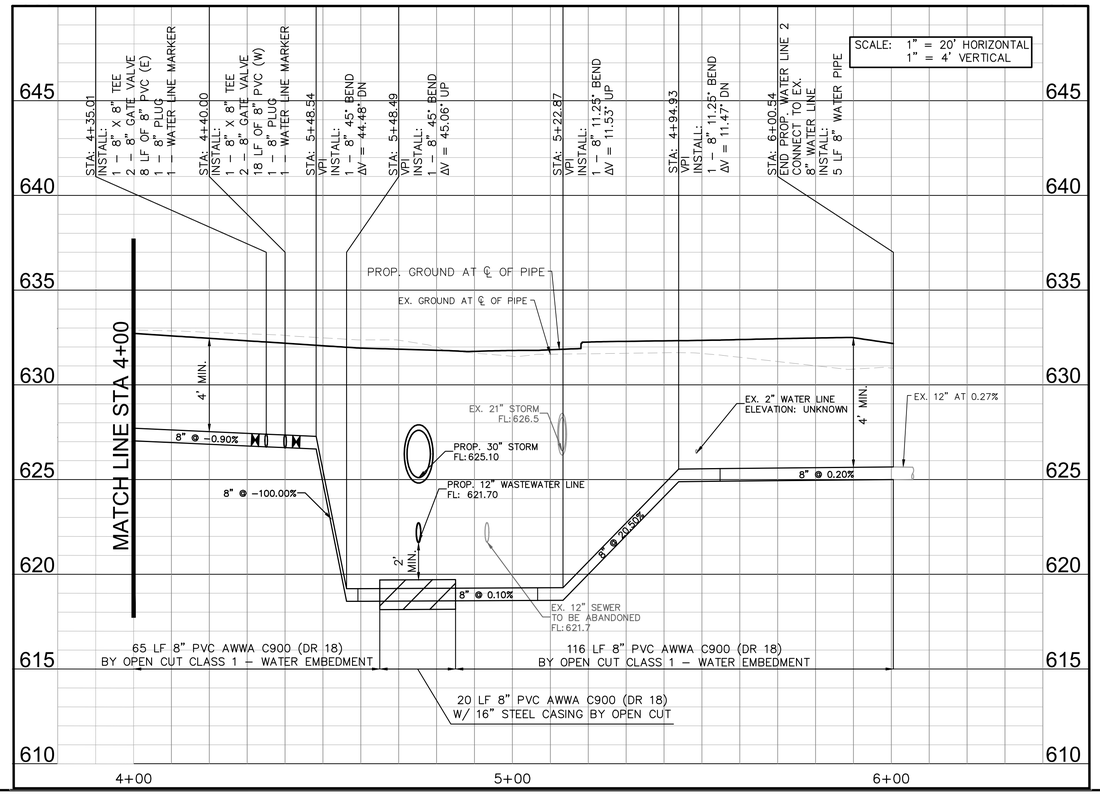

UTILITY LEGEND

- PROP WATER LINE
- PROP 1" & 2" WATER SERVICE
- PROPOSED FIRE HYDRANT
- PROPOSED WATER VALVE
- PROPOSED BORE WITH STEEL CASING
- PROPOSED WASTEWATER LINE
- PROP. SANITARY SEWER MANHOLE
- EXISTING WATER LINE
- EXISTING FIRE HYDRANT
- EXISTING WATER VALVE
- EXISTING SANITARY SEWER LINE
- EXSITING SANITARY SEWER MANHOLE
- EXISTING STORM SEWER LINE
- EXISTING STORM MANHOLE
- EXISTING OVERHEAD POWER LINE
- EXISTING POWER POLE
- EXSITING FENCE
- EXISTING TREE
- ABANDON EXISTING PIPING
- REMOVE EXISTING PIPING

NORTH

GRAPHIC SCALE IN FEET
0 10 20 40

- EXISTING AT&T FIBER
- EXISTING EXTENET COMM.
- EXISTING FIBERLIGHT COMM.
- EXISTING LOGIX COMM.
- EXISTING MCI COMM.
- EXISTING SPECTRUM COMM.
- EXISTING SPECTRUM FIBER.
- EXISTING LUMEN FIBER
- EXISTING GAS
- EXISTING ONCOR ELECTRIC
- EXISTING PRIVATE ELECTRIC
- TREE REMOVAL

NOTES:

1. CONTRACTOR TO FIELD VERIFY LOCATION OF EXISTING UTILITIES PRIOR TO CONSTRUCTION.
2. CONTRACTOR TO LOCATE ALL SERVICE LATERALS AND WATER METERS PRIOR TO CONSTRUCTION TO ENSURE SERVICE IS MAINTAINED.
3. TOWN OF ADDISON STAFF SHALL OPERATE ALL EXISTING WATER SYSTEM VALVES. CONTRACTOR SHALL COORDINATE WITH THE TOWN A MINIMUM OF [XX] HOURS PRIOR TO ANY WORK REQUIRING VALVE OPERATION, SYSTEM SHUTDOWN, CONNECTION TO THE EXISTING SYSTEM, OR TESTING AFFECTING THE EXISTING SYSTEM. NO SHUTDOWN OR CONNECTION SHALL OCCUR WITHOUT PRIOR TOWN APPROVAL. CONTRACTOR SHALL HAVE ALL REQUIRED MATERIALS, EQUIPMENT, PERSONNEL, AND TEMPORARY FACILITIES IN PLACE PRIOR TO INITIATING A SHUTDOWN. CONTRACTOR SHALL COORDINATE TESTING WITH THE TOWN AND SHALL CORRECT AND RETEST ANY DEFICIENCIES PRIOR TO PLACING THE AFFECTED FACILITIES INTO SERVICE. THE TOWN RESERVES THE RIGHT TO DELAY WORK IF CONDITIONS ARE NOT ACCEPTABLE TO PROCEED.
4. PROVIDE CONCRETE THRUST BLOCKS AT ALL BENDS, TEES, WYES, VALVES, AND HYDRANTS. VERTICAL BENDS DOWN SHALL UTILIZE RESTRAINED JOINTS; PROVIDE ADDITIONAL RESTRAINED JOINTS WHERE SHOWN ON THE PLANS. POLYWRAP ALL FITTINGS WITH 8-MIL POLYETHYLENE PRIOR TO CONCRETE PLACEMENT. THRUST BLOCKS SHALL BE MINIMUM CLASS "B" (3,000 PSI) CONCRETE, DESIGNED FOR A 200 PSI TEST PRESSURE, AND PLACED AGAINST UNDISTURBED EARTH WITH FORMS AS REQUIRED TO KEEP FLANGES, GLANDS, AND BOLTS ACCESSIBLE. CONSTRUCT THRUST RESTRAINTS IN ACCORDANCE WITH CURRENT NCTCOG STANDARDS.
5. FIRE HYDRANT ASSEMBLY INCLUDES ALL FITTINGS, TEES, PIPES, AND VALVES.
6. CONTRACTOR SHALL ONLY HAVE ONE FIRE HYDRANT OUT OF SERVICE AT ANY TIME DURING CONSTRUCTION.
7. CONTRACTOR TO BRACE ELECTRIC CONDUIT DURING CONSTRUCTION.
8. THE CONTRACTOR SHALL BE RESPONSIBLE FOR MAKING THE WATER LINE CONNECTIONS AS SPECIFIED IN THE PLANS. ANY ADDITIONAL PIPE, FITTINGS, OR MATERIALS NOT SPECIFICALLY SHOWN IN THE PLANS BUT NEEDED TO MAKE THE CONNECTIONS SHALL BE CONSIDERED SUBSIDIARY TO THE PROJECT COST AND REFLECTED IN THE UNIT BID PRICES FOR THE VARIOUS BID ITEMS LISTED IN THE PROPOSAL.
9. ALL DUCTILE IRON FITTINGS, VALVES, FIRE HYDRANTS AND OTHER METAL APPURTENANCES LOCATED BELOW GROUND SHALL BE WRAPPED IN POLYETHYLENE. ALL DUCTILE IRON FITTINGS SHALL BE MECHANICAL JOINT AND SHALL BE RESTRAINED WITH EEBA IRON SERIES MEGALUG, OR APPROVED EQUAL UNLESS OTHERWISE SHOWN IN PLANS.
10. CONTRACTOR SHALL BE RESPONSIBLE FOR INSTALLING VERTICAL FITTINGS FOR 8" PIPE AS REQUIRED. COST SHALL BE SUBSIDIARY TO THE 6" AND 8" WATER LINE BID ITEMS.
11. CONTRACTOR SHALL MAINTAIN CONTINUOUS WATER SERVICE TO ALL CUSTOMERS DURING CONSTRUCTION. TEMPORARY WATER SERVICE, IF REQUIRED, SHALL BE PROVIDED USING OWNER-APPROVED METHODS. TEMPORARY WATER LINES SHALL MATCH THE DIAMETER OF THE LINE TAKEN OUT OF SERVICE.
12. EXISTING STORM SEWER FACILITIES DESIGNATED FOR REMOVAL AS PART OF THIS PROJECT SHALL BE REMOVED AND ABANDONED PRIOR TO INSTALLATION OF THE PROPOSED WATER LINE.
13. THE CONTRACTOR SHALL REMOVE AND PROPERLY DISPOSE OF ALL MATERIALS REMOVED AS PART OF THE WORK AT NO ADDITIONAL COST TO THE OWNER.

!!WARNING!!

EXISTING UTILITIES IN THE AREA. CONTRACTOR SHALL FIELD VERIFY THE LOCATION OF ALL EXISTING UTILITIES WITH THE PROVIDER PRIOR TO START OF CONSTRUCTION AND SHALL IMMEDIATELY NOTIFY THE ENGINEER OF ANY CONFLICTS DISCOVERED. CONTRACTOR IS RESPONSIBLE FOR COORDINATING UTILITY RELOCATION WHERE NECESSARY AND PROTECTING EXISTING UTILITIES (SHOWN OR NOT SHOWN). IF ANY EXISTING UTILITIES ARE DAMAGED, THE CONTRACTOR SHALL REPLACE THEM AT THEIR OWN EXPENSE.

811 Know what's below. Call before you dig.

No.	REVISIONS	DATE	BY

PROJECT NO. C00057/ BID NO. 27-31

Kimley»Horn
225 E. JOHN W. CARPENTER FREEWAY SUITE 1100
IRVING, TX 75062
PHONE: 214-565-0660
WWW.KIMLEY-HORN.COM
© 2026 KIMLEY-HORN AND ASSOCIATES, INC.
TEXAS REGISTERED ENGINEERING FIRM #F-928

11/06/2026

STATE OF TEXAS
HANNAH G. WOOD
PROF. LICENSED ENGINEER
162206

KHA PROJECT 063543066			
DATE 11/06/2026	SCALE	AS SHOWN	
	DESIGNED BY	HGW	CIS
	DRAWN BY	CIS	LMW
	CHECKED BY	LMW	

ADDISON
ADDISON JUNCTION
PUBLIC
INFRASTRUCTURE
IMPROVEMENTS

WATER
WATER LINE 2
STA 4+00 TO END

SHEET NUMBER
77

Plotted By: Wood, Hannah November 10, 2026 03:10:08pm C:\ACCUAD\Docs\Working\063543066-ADDISON JUNCTION PUBLIC\Project Files\CAD\Plansets\WATER-JULIAN AVENUE.dwg
This document, together with the concepts and designs presented herein, as an instrument of service, is intended only for the specific purpose and client for which it was prepared. Reuse of and improper reliance on this document without written authorization and adaptation by Kimley-Horn and Associates, Inc. shall be without liability to Kimley-Horn and Associates, Inc.

PROPOSED WATER STUB A

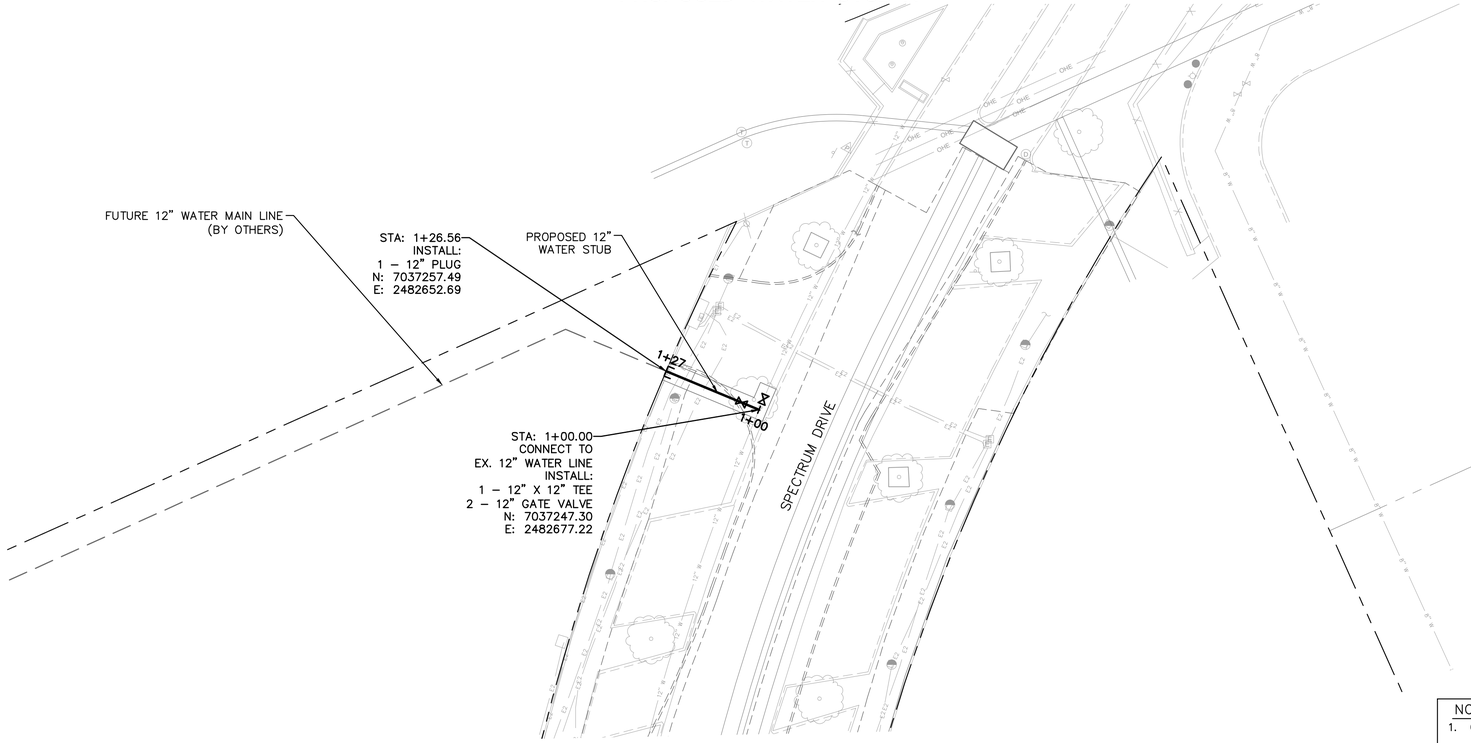

PROPOSED WATER STUB B

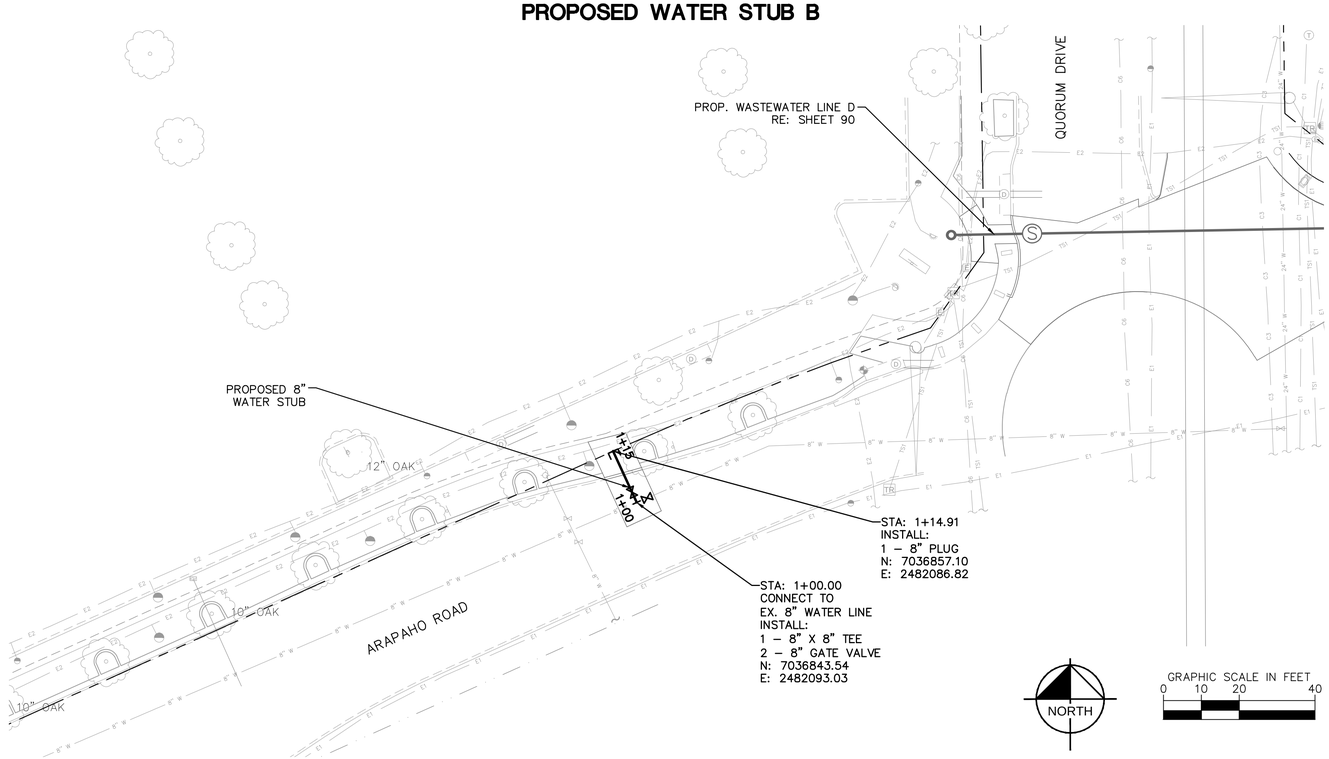

UTILITY LEGEND

- PROPOSED WATER LINE
- PROPOSED FIRE HYDRANT
- PROPOSED WATER VALVE
- PROPOSED BORE WITH STEEL CASING
- EXSITING FENCE
- EXSITING SANITARY SEWER MANHOLE
- PROP. SANITARY SEWER MANHOLE
- PROPOSED SANITARY SEWER
- OTHER PROPOSED SANITARY SEWER
- EXISTING OVERHEAD POWER LINE
- EXISTING WATER LINE
- EXISTING SANITARY SEWER LINE
- EXISTING STORM SEWER LINE
- EXISTING POWER POLE
- EXISTING FIRE HYDRANT
- EXISTING WATER VALVE
- ABANDON EXISTING PIPING
- REMOVE EXISTING PIPING
- EXISTING AT&T FIBER
- EXISTING EXTENET COMM.
- EXISTING FIBERLIGHT COMM.
- EXISTING LOGIX COMM.
- EXISTING MCI COMM.
- EXISTING SPECTRUM COMM.
- EXISTING SPECTRUM FIBER.
- EXISTING LUMEN FIBER
- EXISTING GAS
- EXISTING ONCOR ELECTRIC
- EXISTING PRIVATE ELECTRIC

NOTES:

1. CONTRACTOR TO FIELD VERIFY LOCATION OF EXISTING UTILITIES PRIOR TO CONSTRUCTION.
2. CONTRACTOR TO LOCATE ALL SERVICE LATERALS AND WATER METERS PRIOR TO CONSTRUCTION TO ENSURE SERVICE IS MAINTAINED.
3. TOWN OF ADDISON STAFF WILL OPERATE ALL EXISTING VALVES.
4. PROVIDE CONCRETE THRUST BLOCKS AT ALL BENDS, TEES, WYES, VALVES, AND HYDRANTS. VERTICAL BENDS DOWN SHALL UTILIZE RESTRAINED JOINTS; PROVIDE ADDITIONAL RESTRAINED JOINTS WHERE SHOWN ON THE PLANS. POLYWRAP ALL FITTINGS WITH 8–MIL POLYETHYLENE PRIOR TO CONCRETE PLACEMENT. THRUST BLOCKS SHALL BE MINIMUM CLASS "B" (3,000 PSI) CONCRETE, DESIGNED FOR A 200 PSI TEST PRESSURE, AND PLACED AGAINST UNDISTURBED EARTH WITH FORMS AS REQUIRED TO KEEP FLANGES, GLANDS, AND BOLTS ACCESSIBLE. CONSTRUCT THRUST RESTRAINTS IN ACCORDANCE WITH CURRENT NCTCOG STANDARDS.00
5. CONTRACTOR SHALL ONLY HAVE ONE FIRE HYDRANT OUT OF SERVICE AT ANY TIME DURING CONSTRUCTION.
6. CONTRACTOR TO BRACE ELECTRIC CONDUIT DURING CONSTRUCTION.
7. THE CONTRACTOR SHALL BE RESPONSIBLE FOR MAKING THE WATER LINE CONNECTIONS AS SPECIFIED IN THE PLANS. ANY ADDITIONAL PIPE, FITTINGS, OR MATERIALS NOT SPECIFICALLY SHOWN IN THE PLANS BUT NEEDED TO MAKE THE CONNECTIONS SHALL BE CONSIDERED SUBSIDIARY TO THE PROJECT COST AND REFLECTED IN THE UNIT BID PRICES FOR THE VARIOUS BID ITEMS LISTED IN THE PROPOSAL.
8. ALL DUCTILE IRON FITTINGS, VALVES, FIRE HYDRANTS AND OTHER METAL APPURTENANCES LOCATED BELOW GROUND SHALL BE WRAPPED IN POLYETHYLENE. ALL DUCTILE IRON FITTINGS SHALL BE MECHANICAL JOINT AND SHALL BE RESTRAINED WITH EEBA IRON SERIES MEGALUG, OR APPROVED EQUAL UNLESS OTHERWISE SHOWN IN PLANS.
9. CONTRACTOR SHALL BE RESPONSIBLE FOR INSTALLING VERTICAL FITTINGS FOR 8" PIPE AS REQUIRED. COST SHALL BE SUBSIDIARY TO THE 6" AND 8" WATER LINE BID ITEMS.
10. CONTRACTOR SHALL MAINTAIN CONTINUOUS WATER SERVICE TO ALL CUSTOMERS DURING CONSTRUCTION. TEMPORARY WATER SERVICE, IF REQUIRED, SHALL BE PROVIDED USING OWNER–APPROVED METHODS. TEMPORARY WATER LINES SHALL MATCH THE DIAMETER OF THE LINE TAKEN OUT OF SERVICE.
11. EXISTING STORM SEWER FACILITIES DESIGNATED FOR REMOVAL AS PART OF THIS PROJECT SHALL BE REMOVED AND ABANDONED PRIOR TO INSTALLATION OF THE PROPOSED WATER LINE.
12. CONTRACTOR SHALL COORDINATE WITH THE TOWN PRIOR TO MAKING ANY CONNECTION TO THE EXISTING WATER SYSTEM, INCLUDING COORDINATION OF REQUIRED SYSTEM SHUTDOWNS. NO CONNECTION OR SHUTDOWN SHALL OCCUR WITHOUT PRIOR APPROVAL FROM THE TOWN.

!!WARNING!!

EXISTING UTILITIES IN THE AREA. CONTRACTOR SHALL FIELD VERIFY THE LOCATION OF ALL EXISTING UTILITIES WITH THE PROVIDER PRIOR TO START OF CONSTRUCTION AND SHALL IMMEDIATELY NOTIFY THE ENGINEER OF ANY CONFLICTS DISCOVERED. CONTRACTOR IS RESPONSIBLE FOR COORDINATING UTILITY RELOCATION WHERE NECESSARY AND PROTECTING EXISTING UTILITIES (SHOWN OR NOT SHOWN). IF ANY EXISTING UTILITIES ARE DAMAGED, THE CONTRACTOR SHALL REPLACE THEM AT THEIR OWN EXPENSE.

811 Know what's **below.** **Call** before you dig.

No.	REVISIONS	DATE	BY

PROJECT NO. C00057/ BID NO. 27–31

Kimley»Horn
225 E. JOHN W. CARPENTER FREEWAY SUITE 1100
IRVING, TX 75062
PHONE: 214.369.6500
WWW.KIMLEY-HORN.COM

© 2026 KIMLEY-HORN AND ASSOCIATES, INC.

TEXAS REGISTERED ENGINEERING FIRM #F-928

11/06/2026

STATE OF TEXAS
HANNAH G. WOOD
162206
LICENSED
PROFESSIONAL ENGINEER

KHA PROJECT 063543066	DATE 11/06/2026	SCALE AS SHOWN	DESIGNED BY HGW	DRAWN BY CTS	CHECKED BY LMW

ADDISON
ADDISON JUNCTION PUBLIC INFRASTRUCTURE IMPROVEMENTS

PROPOSED WATER STUBS

SHEET NUMBER
78

Plotted By: Stephens, Ian November 06, 2025 04:28:12pm C:\ACCUADDocs\Vinyl+Hinge\063543066-ADDISON JUNCTION PUBLIC\Project Files\CAD\Plansheets\Vinyl+Hinge WATER STUBS.dwg
This document, together with the concepts and designs presented herein, as an instrument of service, is intended only for the specific purpose and client for which it was prepared. Reuse of and improper reliance on this document without written authorization and adaptation by Kimley-Horn and Associates, Inc. shall be without liability to Kimley-Horn and Associates, Inc.

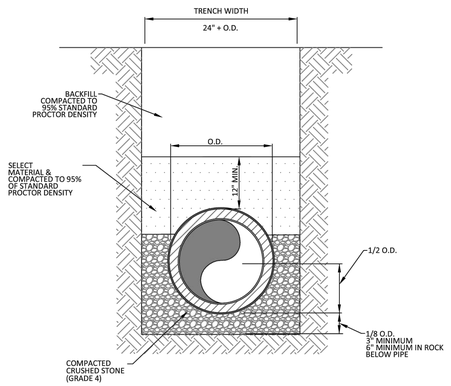

TYPICAL P.V.C.WATER MAIN EMBEDMENT
N.T.S.

ADDISON PUBLIC WORKS & ENGINEERING SERVICES	P.V.C. WATER MAIN EMBEDMENT	STANDARD CONSTRUCTION DETAILS WASTEWATER		
		DATE: JANUARY 2022	REV DATE: -	SHEET: SD-W01

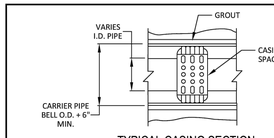

TYPICAL CASING SECTION
N.T.S.

CARRIER PIPE SIZE (IN)	STEEL ENCASEMENT O.D. (IN)	STEEL ENCASEMENT WALL THICKNESS (IN)
6	14	1/4
8	18	1/4
12	21	1/4
18	27	3/8
21	30	3/8
24	36	3/8
27	39	3/8

FOR ALL CARRIER PIPE OVER 27", THE STEEL ENCASEMENT PIPE SHALL BE SIZED TO ACCOMMODATE THE APPROPRIATE CASING SPACERS, AND MINIMUM WALL THICKNESS SHALL BE 1/2".

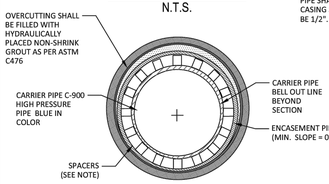

WATER MAIN ENCASEMENT
N.T.S.

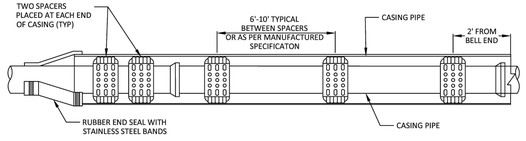

INSULATOR SPACING DETAIL
N.T.S.

1. HIGH DENSITY POLYETHYLENE SPACERS, RACI OR EQUAL, SHALL BE USED. WHERE NO CASING PIPE IS REQUIRED OVERCUTTING AROUND UTILITY SHALL BE FILLED WITH HYDRAULICALLY PLACED NON-SHRINK GROUT AS PER ASTM C476.
2. ENCASEMENT PIPE SHALL BE HIGH DENSITY STEEL PIPE. ALL JOINTS TO BE WELDED 100%

ADDISON PUBLIC WORKS & ENGINEERING SERVICES	CASING	STANDARD CONSTRUCTION DETAILS WASTEWATER		
		DATE: JANUARY 2022	REV DATE: -	SHEET: SD-W03

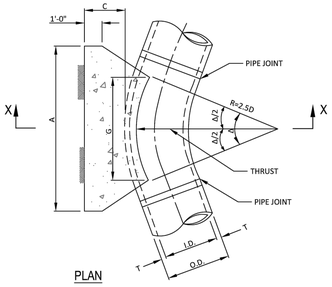

PLAN

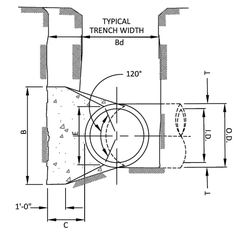

SECTION X-X

ADDISON PUBLIC WORKS & ENGINEERING SERVICES	HORIZONTAL THRUST BLOCK AT PIPE BEND	STANDARD CONSTRUCTION DETAILS WASTEWATER		
		DATE: JANUARY 2022	REV DATE: -	SHEET: SD-W04

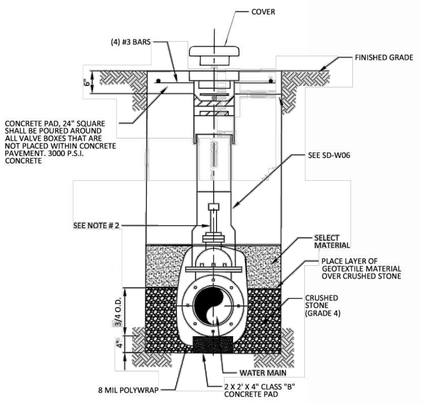

TYPICAL VALVE SETTING AND BOX

NOTES:
1. 4" THRU 12" R.S. GATE VALVES SHALL BE IN ACCORDANCE WITH TOWN OF ADDISON WATER SYSTEM REQUIREMENTS.
2. A PERMANENTLY ATTACHED VALVE EXTENSION STEM SHALL BE REQUIRED FOR ANY VALVE WHERE OPERATING NUT IS LOCATED IN EXCESS OF 5' BELOW THE TOP OF VALVE BOX. THIS EXTENSION SHALL BE OF SUFFICIENT LENGTH TO ENSURE THAT ITS TOP IS WITHIN 5' OF VALVE BOX LID.
3. BLUE "V" (3") CUT INTO FACE OF NEAREST CURB AND POINTING TOWARD THE VALVE.
4. ALL IRON MATERIALS SHALL BE DOMESTIC. (MADE IN USA)

ADDISON PUBLIC WORKS & ENGINEERING SERVICES	VALVE SETTING	STANDARD CONSTRUCTION DETAILS WASTEWATER		
		DATE: APRIL 2024	REV DATE: 04-17-2024	SHEET: SD-W05

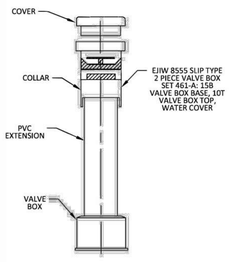

FOR ALL VALVES- 6" C-900 PVC
NTS

ADDISON PUBLIC WORKS & ENGINEERING SERVICES	VALVE BOX WITH EXTENSION	STANDARD CONSTRUCTION DETAILS WATER		
		DATE: APRIL 2024	REV DATE: 04/17/24	SHEET: SD-W06

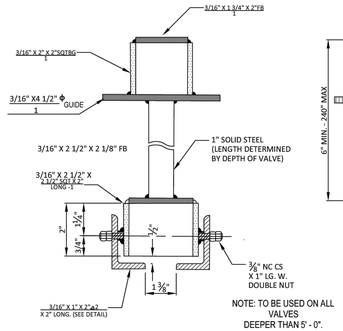

TYPE - B
VALVE EXTENSION
N.T.S.

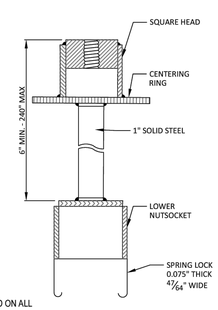

SPRING LOCK
VALVE EXTENSION
N.T.S.

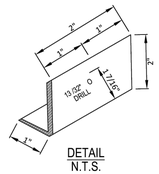

DETAIL
N.T.S.

ADDISON PUBLIC WORKS & ENGINEERING SERVICES	VALVE EXTENSION	STANDARD CONSTRUCTION DETAILS WATER		
		DATE: JANUARY 2022	REV DATE: -	SHEET: SD-W07

NOTE:
1. EJIW 5CD250 HYDRANT OR EQUIVALENT APPROVED BY THE CITY.
2. DESIGN, SITE REQUIREMENTS, THE GENERAL OPERATION, PAINTING AND DELIVERY OF ALL FIRE HYDRANTS SHALL BE IN ACCORDANCE WITH THE TOWN OF ADDISON WATER SYSTEM REQUIREMENTS.
3. FIRE HYDRANTS SHALL BE LOCATED A MINIMUM OF 24" FROM THE P.C.'S OF THE CORNER TURNING RADIUS AT INTERSECTIONS AND DRIVEWAYS (SEE PLAN VIEW).
4. FIRE HYDRANT COLORS: SHERWIN WILLIAMS ALKYD ENAMEL SEMI GLOSS: SAFETY BLUE (SW4086)

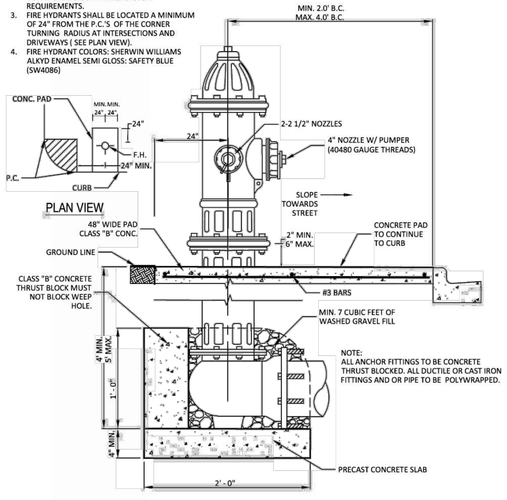

TYPICAL FIRE HYDRANT INSTALLATION
N.T.S.

ADDISON PUBLIC WORKS & ENGINEERING SERVICES	TYPICAL FIRE HYDRANT INSTALLATION	STANDARD CONSTRUCTION DETAILS WATER		
		DATE: JANUARY 2022	REV DATE: OCTOBER 2024	SHEET: SD-W09

No.	REVISIONS	DATE	BY

PROJECT NO. C00057/ BID NO. 27-31

Kimley»Horn
225 E. JOHN W. CARPENTER FREEWAY SUITE 1100
IRVING, TX 75063
PHONE: 214-420-5600
WWW.KIMLEY-HORN.COM
© 2026 KIMLEY-HORN AND ASSOCIATES, INC.
TEXAS REGISTERED ENGINEERING FIRM #F-928

11/06/2026

STATE OF TEXAS
HANNAH G. WOOD
162206
LICENSED PROFESSIONAL ENGINEER

KHA PROJECT 063543066	DATE 11/06/2026
SCALE AS SHOWN	
DESIGNED BY HGW	
DRAWN BY CIS	
CHECKED BY LMW	

ADDISON
ADDISON JUNCTION PUBLIC INFRASTRUCTURE IMPROVEMENTS

WATER
STANDARD DETAILS
(SHEET 1 OF 3)

SHEET NUMBER
79

Plotted By: Stephens, Ian, November 06, 2026 04:23:22pm C:\ACC\ACCDocs\Kimley-Horn\063543066-ADDISON JUNCTION PUBLIC\Project Files\CADD\PlanSheets\WATER - CITY DETAILS.dwg
This document, together with the concepts and designs presented herein, as an instrument of service, is intended only for the specific purpose and client for which it was prepared. Reuse of and improper reliance on this document without written authorization and adaptation by Kimley-Horn and Associates, Inc. shall be without liability to Kimley-Horn and Associates, Inc.

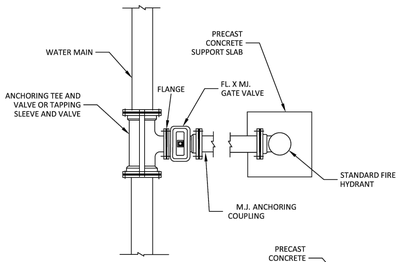

STANDARD INSTALLATION

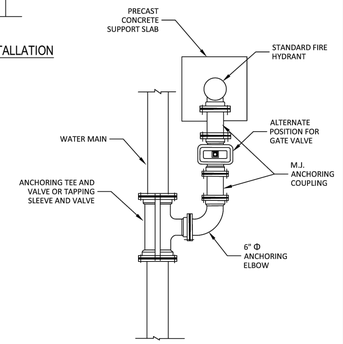

NOTE:
MEGALUGS SHALL BE USED AT ALL TEES AND BENDS.

ALTERNATE INSTALLATION

ADDISON PUBLIC WORKS & ENGINEERING SERVICES	TYPICAL FIRE HYDRANT INSTALLATION	STANDARD CONSTRUCTION DETAILS WATER	DATE: JANUARY 2022	REV DATE: -	SHEET: SD-W10

NOTES:
1. 6"Φ STEEL PIPE W/CONCRETE FILL 6' LENGTH (3' ABOVE PAVING, 3' BELOW PAVING) WITH 1-#4 X 5' - 6" TO BE CASED IN 18" Φ PIER TO DEPTH OF 1' -0" BELOW BOTTOM OF PIPE. USE 2 - #6 X 12" REBAR THRU PIPE INTO CONCRETE PIER. PIPES TO BE PAINTED TRAFFIC YELLOW W/6" WHITE REFLECTOR TAPE WRAPPED AROUND TOP.
2. BLUE STIMSONITE REFLECTORS SHALL BE INSTALLED BE IN ACCORDANCE WITH THE WATER DESIGN SYSTEM STANDARDS.

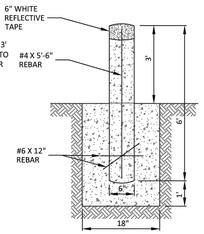

GUARD POST SECTION (N.T.S.)

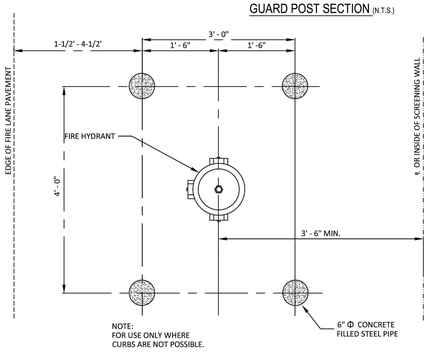

NOTE:
FOR USE ONLY WHERE CURBS ARE NOT POSSIBLE.

FIRE HYDRANT GUARD POST DETAIL (N.T.S.)

ADDISON PUBLIC WORKS & ENGINEERING SERVICES	FIRE HYDRANT GUARD POST	STANDARD CONSTRUCTION DETAILS WATER	DATE: JANUARY 2022	REV DATE: -	SHEET: SD-W11

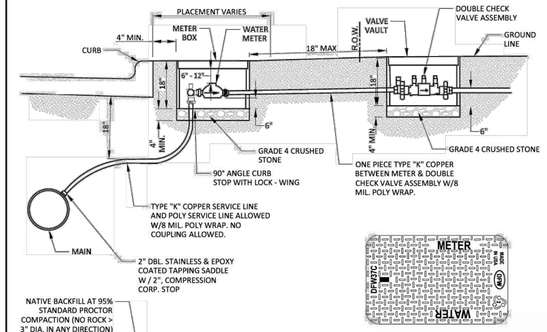

METER TOP

GENERAL INSTALLATION NOTES:
1. WATER METER SHALL BE PLACED IN CENTER OF LOT WITH THE WASTEWATER SERVICE TO BE LOCATED 10' DOWN STREAM.
2. METER AND BOX SHALL BE SET BY THE CONTRACTOR TO ADDISON STANDARDS IN ALL CASES.
3. THE METER BOX SHALL BE SET WITHIN THE R.O.W. OR A DEDICATED UTILITY EASEMENT. IN ALL CASES, THE METER BOX SHALL BE PROTECTED FROM VEHICULAR TRAFFIC.
4. WATER SERVICES SHALL NOT BE CONNECTED TO DEAD END LINES OR FIRE HYDRANT LEADS WITHOUT PRIOR APPROVAL.
5. ALL MATERIALS SHALL CONFORM TO THE TOWN OF ADDISON WATER SYSTEM REQUIREMENTS.

METER BOXES - COMPOSITE DFW PLASTICS PARTS NUMBER
- 3/4" - 1" : DFW PLASTICS DFW37C-18-AF1SF (DFW37C-18-BODY & DFW37C-AF1SF-LID)
- 1.5" - 2" : DFW PLASTICS DFW65C-14-AF1SF (DFW65C-14-BODY & DFW65C-AF1SF-LID)

ADDISON PUBLIC WORKS & ENGINEERING SERVICES	SERVICE CONNECTION WITH METER BOX	STANDARD CONSTRUCTION DETAILS WATER	DATE: JANUARY 2022	REV DATE: JUNE 2025	SHEET: SD-W12

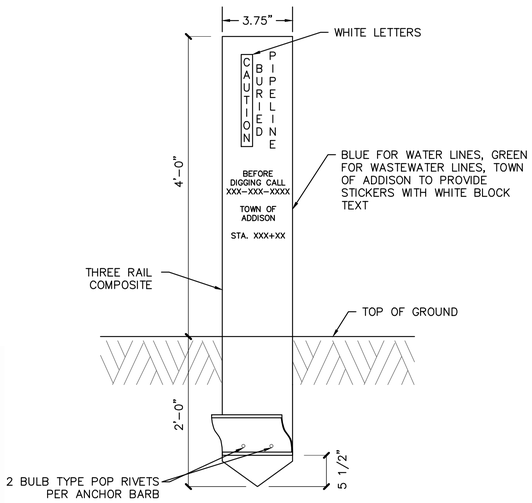

NOTES:
1. LOCATE PIPELINE MARKERS AT ALL MAINLINE VALVES, BLOWOFF VALVES, AIR RELEASE VALVES, ALL HORIZONTAL BENDS, AND BOTH SIDES OF ALL ROAD AND RAILROAD CROSSINGS.
2. EACH PIPELINE MARKER SHALL HAVE STICKERS TYPES OR STAMPED WITH NON-FADING INK WITH INFORMATION SHOWN. (HAND WRITTEN INFORMATION PROHIBITED)

Water Line Marker DETAIL
3 / D10
SCALE: NOT TO SCALE

No.	REVISIONS	DATE	BY

PROJECT NO. C00057/ BID NO. 27-31

Kimley»Horn
225 E. JOHN W. CARPENTER FREEWAY SUITE 1100
IRVING, TX 75063
PHONE: 214-420-5600
WWW.KIMLEY-HORN.COM
© 2026 KIMLEY-HORN AND ASSOCIATES, INC.
TEXAS REGISTERED ENGINEERING FIRM #F-928

11/06/2026



KHA PROJECT	063543066
DATE	11/06/2026
SCALE	AS SHOWN
DESIGNED BY	HGW
DRAWN BY	CIS
CHECKED BY	LMW

ADDISON
ADDISON JUNCTION PUBLIC INFRASTRUCTURE IMPROVEMENTS

WATER
STANDARD DETAILS
(SHEET 2 OF 3)

SHEET NUMBER
80

Plotted By: Stephens, Ian November 06, 2026 04:23:24pm C:\ACC\ACCDocs\Kimley-Horn\063543066-ADDISON JUNCTION PUBLIC\Project Files\CADD\PlanSheets\WATER - CITY DETAILS.dwg
The electronic data and designs presented herein, as an instrument of service, is intended only for the specific purpose and client for which it was prepared. Reuse of and improper reliance on this document without written authorization and adaptation by Kimley-Horn and Associates, Inc. shall be without liability to Kimley-Horn and Associates, Inc.

I.D. (IN.)	T (IN.)	Δ = 11.25° C (FT.)	Δ ≥ 22.50° C (FT.)	E (FT.)
4,6,8	0.4	1.5	1.5	0.9
10,12	0.5	1.5	1.5	1.2
16,18	0.6	1.5	1.5	1.6
20	0.7	1.5	1.5	1.8
24	0.9	1.5	1.5	2.1
30	2.9	1.5	1.9	2.6
36	4.5	1.5	2.3	3.3
42	5.0	1.8	2.6	3.8
48	5.5	2.0	3.0	4.3
54	6.0	2.3	3.4	4.8
60	6.5	2.5	3.8	5.3
66	6.8	2.8	4.1	5.7
72	7.5	3.0	4.5	6.3
78	7.5	3.3	4.9	6.7
84	8.0	3.5	5.3	7.2
90	8.5	3.8	5.6	7.7
96	9.0	4.0	6.0	8.2

	Δ = 11.25°							Δ = 22.50°						
			EARTH			ROCK				EARTH			ROCK	
I.D. (IN.)	G (FT.)	THRUST (TONS)	A (FT.)	B (FT.)	VOL. (C.Y.)	A (FT.)	B (FT.)	VOL. (C.Y.)	I.D. (IN.)	G (FT.)	THRUST (TONS)	A (FT.)	B (FT.)	VOL. (C.Y.)	A (FT.)	B (FT.)	VOL. (C.Y.)
4,6,8	0.4	1.0	1.0	1.5	0.1	1.0	1.0	0.1	4,6,8	0.8	2.0	1.5	1.5	0.1	1.0	1.0	0.1
10,12	0.6	2.2	1.5	1.5	0.1	1.0	1.5	0.1	10,12	1.1	4.4	2.0	2.5	0.3	1.5	1.5	0.1
16,18	0.8	5.0	2.0	2.5	0.3	1.5	2.0	0.2	16,18	1.6	9.9	3.0	3.5	0.6	2.0	2.5	0.3
20	0.9	6.2	2.0	3.5	0.4	1.5	3.0	0.3	20	1.8	12.3	3.5	3.5	0.7	2.0	3.0	0.4
24	1.1	8.9	3.0	3.5	0.5	1.5	3.0	0.3	24	2.2	17.7	4.0	4.5	1.0	3.0	3.5	0.5
30	1.4	10.4	3.0	3.5	0.6	2.0	3.5	0.4	30	2.7	20.7	5.0	4.5	1.5	3.0	4.0	0.8
36	1.7	15.0	3.5	4.5	0.9	2.0	4.0	0.5	36	3.3	29.8	5.5	5.5	2.3	4.0	4.0	1.3
42	1.9	20.4	4.5	5.0	1.5	2.5	5.0	0.8	42	3.8	40.5	7.0	6.0	3.9	4.5	5.0	2.1
48	2.2	26.6	4.5	6.0	2.0	2.5	6.0	1.1	48	4.4	52.9	8.0	7.0	5.7	4.5	6.0	2.8
54	2.5	33.7	6.0	6.0	3.0	3.0	6.0	1.4	54	4.9	67.0	9.0	8.0	8.0	6.0	6.0	4.1
60	2.7	41.6	6.0	7.0	3.8	3.0	7.0	1.8	60	5.5	82.7	9.5	9.0	10.6	6.0	7.0	5.3
66	3.0	50.3	6.5	8.0	5.1	3.5	8.0	2.7	66	6.0	100.1	10.5	10.0	14.1	6.5	8.0	7.2
72	3.3	59.9	7.5	8.0	6.3	4.0	8.0	3.3	72	6.6	119.1	11.0	11.0	17.6	7.5	8.0	9.1
78	3.6	70.2	8.0	9.0	8.1	4.0	9.0	3.9	78	7.1	139.8	12.0	12.0	22.5	8.0	9.0	11.7
84	3.8	81.5	8.5	10.0	10.3	4.5	10.0	5.3	84	7.6	162.1	13.0	12.5	27.2	8.5	10.0	14.8
90	4.1	93.5	9.5	10.0	12.2	5.0	10.0	6.3	90	8.2	186.1	14.0	13.5	33.7	9.5	10.0	17.7
96	4.4	106.4	10.0	11.0	15.0	5.0	11.0	7.4	96	8.7	211.7	15.0	14.5	41.2	10.0	11.0	21.8

TABLES OF DIMENSIONS AND QUANTITIES

HORIZONTAL THRUST BLOCK	North Central Texas Council of Governments	STANDARD SPECIFICATION REFERENCE 502.4	
AT PIPE BEND		DATE AUG '23	STANDARD DRAWING NO. 4010B

	Δ = 30°								Δ = 45°							
			EARTH			ROCK					EARTH			ROCK		
I.D. (IN.)	G (FT.)	THRUST (TONS)	A (FT.)	B (FT.)	VOL. (C.Y.)	A (FT.)	B (FT.)	VOL. (C.Y.)	I.D. (IN.)	G (FT.)	THRUST (TONS)	A (FT.)	B (FT.)	VOL. (C.Y.)	A (FT.)	B (FT.)	VOL. (C.Y.)
4,6,8	1.0	2.6	2.0	1.5	0.2	1.0	1.5	0.1	4,6,8	1.5	3.9	2.0	2.0	0.2	1.5	1.5	0.1
10,12	1.5	5.9	2.5	2.5	0.3	2.0	1.5	0.2	10,12	2.2	8.7	3.5	2.5	0.5	2.0	2.5	0.3
16,18	2.2	13.2	3.5	4.0	0.8	2.5	3.0	0.4	16,18	3.2	19.5	4.5	4.5	1.2	3.0	3.5	0.6
20	2.4	16.3	4.5	4.0	1.0	3.0	3.0	0.5	20	3.6	24.1	5.5	4.5	1.5	3.5	3.5	0.7
24	2.9	23.4	6.0	4.0	1.4	3.5	3.5	0.7	24	4.3	34.6	8.0	4.5	2.3	4.5	4.0	1.1
30	3.6	27.5	6.5	5.0	1.9	3.5	4.0	0.9	30	5.4	40.6	8.5	5.0	3.2	5.5	4.0	1.6
36	4.4	39.5	7.0	6.0	3.4	4.5	4.5	1.6	36	6.5	58.5	10.0	6.0	5.3	6.5	4.5	2.6
42	5.1	53.8	8.0	7.0	5.1	5.5	5.0	2.5	42	7.5	79.6	11.5	7.0	8.1	8.0	5.0	4.2
48	5.8	70.3	9.0	8.0	7.4	6.0	6.0	3.7	48	8.6	104.0	13.0	8.0	11.9	9.0	6.0	6.3
54	6.5	89.0	10.0	9.0	10.3	7.0	6.5	5.3	54	9.7	131.5	15.0	9.0	17.1	10.5	6.5	8.9
60	7.3	110.0	11.0	10.0	13.9	7.5	7.5	7.3	60	10.7	162.4	16.5	10.0	23.1	11.0	7.5	12.0
66	8.0	132.9	12.5	11.0	18.9	8.5	8.0	9.6	66	11.8	196.5	18.0	11.0	30.1	12.0	8.5	16.2
72	8.7	158.2	13.5	12.0	24.0	9.0	9.0	12.3	72	12.9	233.9	19.5	12.0	38.6	14.0	8.5	20.7
78	9.4	185.6	14.5	13.0	30.0	10.0	9.5	15.6	78	13.9	274.5	21.5	13.0	49.8	14.5	9.5	25.9
84	10.1	215.3	15.5	14.0	37.1	10.5	10.5	19.5	84	15.0	318.4	23.0	14.0	61.2	15.5	10.5	32.6
90	10.9	247.1	16.5	15.0	45.0	11.5	11.0	23.9	90	16.1	365.5	24.5	15.0	74.5	17.5	10.5	39.6
96	11.6	281.2	18.0	16.0	55.5	12.5	11.5	28.9	96	17.1	415.6	26.0	16.0	89.5	18.5	11.5	48.5

	Δ = 67.50°							Δ = 90°						
			EARTH			ROCK				EARTH			ROCK	
I.D. (IN.)	G (FT.)	THRUST (TONS)	A (FT.)	B (FT.)	VOL. (C.Y.)	A (FT.)	B (FT.)	VOL. (C.Y.)	I.D. (IN.)	G (FT.)	THRUST (TONS)	A (FT.)	B (FT.)	VOL. (C.Y.)	A (FT.)	B (FT.)	VOL. (C.Y.)
4,6,8	2.1	5.6	3.0	2.0	0.3	2.0	1.5	0.2	4,6,8	2.7	7.1	5.0	1.5	0.4	2.0	2.0	0.2
10,12	3.1	12.6	5.5	2.5	0.8	3.5	2.0	0.4	10,12	4.0	16.0	6.5	2.5	1.0	3.5	2.5	0.5
16,18	4.7	28.3	7.5	4.0	1.9	5.5	3.0	0.9	16,18	6.0	36.0	9.0	4.0	2.4	4.5	4.0	1.0
20	5.2	34.9	9.0	4.0	2.3	5.5	3.5	1.2	20	6.6	44.4	10.0	4.5	3.1	6.0	4.0	1.5
24	6.2	50.3	11.5	4.5	3.5	6.5	4.0	1.6	24	7.9	64.0	14.5	4.5	5.0	8.0	4.0	2.1
30	7.8	58.9	12.0	5.0	4.8	7.5	4.0	2.2	30	9.9	75.0	15.0	5.0	6.7	10.0	4.0	3.3
36	9.4	84.9	14.5	6.0	8.2	9.5	4.5	3.8	36	11.9	108.0	18.0	6.0	11.4	12.0	4.5	5.3
42	10.9	115.5	17.0	7.0	12.8	11.0	5.5	6.3	42	13.9	147.0	21.0	7.0	17.8	14.0	5.5	8.7
48	12.5	150.9	19.0	8.0	18.4	13.0	6.0	9.2	48	15.9	192.0	24.0	8.0	26.2	16.0	6.0	12.4
54	14.0	191.0	21.5	9.0	26.0	15.0	6.5	12.9	54	17.9	243.0	27.0	9.0	36.9	18.0	7.0	18.1
60	15.6	235.8	24.0	10.0	35.6	16.0	7.5	17.6	60	19.9	299.8	30.0	10.0	50.3	20.0	7.5	24.0
66	17.1	285.3	26.0	11.0	46.0	18.0	8.0	23.0	66	21.8	362.8	33.0	11.0	66.2	22.0	8.5	32.5
72	18.7	339.5	28.5	12.0	57.8	19.0	9.0	28.4	72	23.8	431.8	36.0	12.0	85.6	24.0	9.0	41.0
78	20.2	398.5	31.0	13.0	75.7	21.0	9.5	37.4	78	25.7	506.7	39.0	13.0	108.2	26.0	10.0	53.2
84	21.8	462.1	33.5	14.0	94.7	22.0	10.5	46.5	84	27.7	587.7	42.0	14.0	134.4	28.0	10.5	64.8
90	23.3	530.5	35.5	15.0	114.4	24.5	11.0	58.2	90	29.0	674.6	45.0	15.0	164.9	30.0	11.5	81.2
96	24.9	603.6	38.0	16.0	138.9	25.5	12.0	70.0	96	31.6	767.5	48.0	16.0	199 0	32.0	12.0	95.1

TABLE OF DIMENSIONS AND QUANTITIES

HORIZONTAL THRUST BLOCK	North Central Texas Council of Governments	STANDARD SPECIFICATION REFERENCE 502.4	
AT PIPE BEND		DATE AUG '23	STANDARD DRAWING NO. 4010C

GENERAL NOTES FOR ALL THRUST BLOCKS:

1. CONCRETE FOR BLOCKING SHALL BE CLASS "B".
2. ALL CALCULATIONS ARE BASED ON INTERNAL PRESSURE OF 200 PSI FOR DUCTILE IRON, P.V.V, AND 150 PSI FOR CONCRETE PIPE.
3. VOLUMES OF THRUST BLOCKS ARE NET VOLUMES OF CONCRETE TO BE FURNISHED. THE CORRESPONDING WEIGHT OF THE CONCRETE (CLASS "B") IS EQUAL TO OR GREATER THAN THE VERTICAL COMPONENT OF THE THRUST ON THE VERTICAL BEND.
4. WALL THICKNESS (T) ASSUMED HERE FOR ESTIMATING PURPOSES ONLY.
5. POUR CONCRETE FOR BLOCKS AGAINST UNDISTURBED EARTH.
6. DIMENSIONS MAY BE VARIED AS REQUIRED BY FIELD CONDITIONS WHRE AND AS DIRECTED BY THE ENGINEER. THE VOLUME OF CONCRETE BLOCKING SHALL NOT BE LESS THAN SHOWN HERE.
7. THE SOIL BEARING PRESSURES ARE BASED ON 1000 LBS./S.F. IN SOIL AND 2000 LBS./S.F. IN ROCK.
8. USE POLYETHYLENE WRAP OR EQUAL BETWEEN CONCRETE AND BEND, TEE, OR PLUG TO PREVENT THE CONCRETE FROM STICKING TO IT.
9. CONCRETE SHALL NOT EXPAND BEYOND JOINTS.
10. RESTRAINED JOINTS AND/OR THRUST BLOCKING SHALL BE USED TO RESIST THRUST FORCES AT ALL FITTINGS. IF USED IN LIEU OF THRUST BLOCKING, RESTRAINING LENGTH SHALL BE CALCULATED IN ACCORDANCE WITH AWWA M41 FOR DUCTILE IRON PIPES AND AWWA M23 FOR PVC PIPES.
11. IF ADDING ADDITIONAL SACRIFICIAL ANODE DETAIL: SACRIFICIAL ANODES CAN BE ADDED TO FITTINGS AS DIRECTED BY OWNER AND/OR ENGINEER.

THRUST BLOCK	North Central Texas Council of Governments	STANDARD SPECIFICATION REFERENCE 502.4	
GENERAL NOTES		DATE AUG '23	STANDARD DRAWING NO. 4040

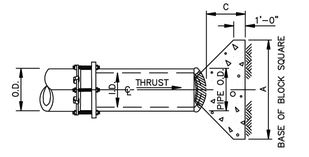

PLAN OF PLUG THRUST BLOCK

N.T.S.

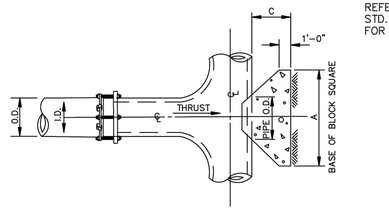

PLAN OF TEE THRUST BLOCK

N.T.S.

REFER TO STD. DWG. No. 4040 FOR GENERAL NOTES.

I.D. (IN.)	THRUST (TONS)	C (FT.)	EARTH A (FT.)	EARTH VOL. (C.Y.)	ROCK A (FT.)	ROCK VOL. (C.Y.)
4,6,8	5.1	1.5	2.5	0.3	2.0	0.2
10,12	11.3	1.5	3.5	0.6	2.5	0.3
16,18	25.5	2.0	5.5	1.6	4.0	0.9
20	31.5	2.0	6.0	1.9	4.0	0.9
24	45.2	2.5	7.0	3.1	5.0	1.7
30	53.0	3.0	7.5	4.1	5.5	2.2
36	76.3	4.0	9.0	6.5	6.5	4.2
42	104.0	4.5	10.5	11.0	7.5	6.2
48	136.0	5.0	12.0	15.8	8.5	8.9
54	172.0	5.5	13.5	21.4	9.5	11.9
60	212.0	6.0	15.0	28.4	10.5	15.7
66	257.0	6.5	16.5	36.8	11.5	20.5
72	305.0	7.5	17.5	47.2	12.5	27.2
78	358.0	8.0	19.0	58.9	13.5	33.7
84	416.0	8.5	20.5	72.3	14.5	41.2
90	477.0	9.0	22.0	87.7	15.5	49.7
96	543.0	9.5	23.5	104.8	16.5	61.0

HORIZONTAL THRUST BLOCK	North Central Texas Council of Governments	STANDARD SPECIFICATION REFERENCE 502.4	
AT TEES AND PLUGS		DATE AUG '23	STANDARD DRAWING NO. 4020

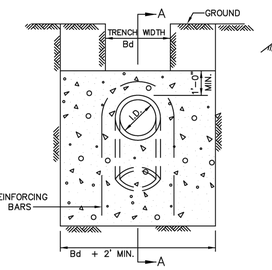

ELEVATION "B–B"

N.T.S.

SECTION "A–A"

N.T.S.

REFER TO STD. DWG. No. 4040 FOR GENERAL NOTES.

Δ →	11.25°		22.50°		30°		45°		67.50°		90°		← Δ
I.D. (IN.)	THRUST (TONS)	VOL. (C.Y.)	THRUST (TONS)	VOL. (C.Y.)	THRUST (TONS)	VOL. (C.Y.)	THRUST (TONS)	VOL. (C.Y.)	THRUST (TONS)	VOL. (C.Y.)	THRUST (TONS)	VOL. (C.Y.)	I.D. (IN.)
4,6,8	1.0	0.5	2.0	1.0	2.5	1.3	3.6	1.8	4.6	2.3	5.0	2.5	4,6,8
10,12	2.2	1.1	4.3	2.2	5.7	2.8	8.0	4.0	10.5	5.2	11.3	5.7	10,12
16,18	5.0	2.5	9.7	4.9	12.7	6.4	18.0	9.0	23.5	11.8	25.5	12.7	16,18
20	6.1	3.1	12.0	6.0	15.7	7.9	22.2	11.1	29.2	14.5	31.4	15.7	20
24	8.2	4.4	17.3	8.7	22.6	11.3	32.0	16.0	41.8	20.9	45.2	22.6	24
30	10.5	5.2	20.3	10.1	26.5	13.3	37.5	18.8	49.0	24.5	53.1	26.5	30
36	14.9	7.5	29.2	14.6	38.2	19.1	54.0	27.0	70.5	35.3	76.4	38.2	36
42	20.3	10.1	39.8	19.9	52.0	26.0	73.5	36.7	96.0	48.0	104.0	52.0	42
48	26.5	13.2	51.9	26.0	67.9	33.9	96.0	48.0	126.0	62.7	136.0	67.9	48
54	33.5	16.8	65.7	32.9	85.9	42.9	122.0	60.7	159.0	79.4	172.0	85.9	54
60	41.4	20.7	81.2	40.6	106.0	53.0	150.0	75.0	196.0	98.0	212.0	106.0	60
66	50.1	25.0	98.2	49.1	128.0	64.2	182.0	90.7	237.0	119.0	257.0	128.0	66
72	59.6	29.8	117.0	58.4	153.0	76.3	216.0	108.0	282.0	141.0	305.0	153.0	72
78	69.9	35.0	137.0	68.6	179.0	90.0	254.0	127.0	331.0	166.0	358.0	179.0	78
84	81.1	40.5	159.0	79.5	208.0	104.0	294.0	147.0	384.0	192.0	416.0	208.0	84
90	93.1	46.5	183.0	91.3	239.0	119.0	337.0	169.0	441.0	221.0	477.0	239.0	90
96	106.0	53.0	208.0	104.0	272.0	136.0	384.0	192.0	502.0	251.0	543.0	272.0	96

VERTICAL THRUST BLOCK

AT PIPE BEND

North Central Texas Council of Governments	STANDARD SPECIFICATION REFERENCE 502.4	
	DATE AUG '23	STANDARD DRAWING NO. 4030

No.	REVISIONS	DATE	BY

PROJECT NO. C00057/ BID NO. 27-31

Kimley»Horn
225 E. JOHN W. CARPENTER FREEWAY SUITE 1100
IRVING, TX 75063
PHONE: 214-420-5600
WWW.KIMLEY-HORN.COM

© 2026 KIMLEY-HORN AND ASSOCIATES, INC.

TEXAS REGISTERED ENGINEERING FIRM #F-928

11/06/2026



KHA PROJECT 063543066	DATE 11/06/2026	SCALE AS SHOWN	DESIGNED BY HGW
		DRAWN BY CJS	CHECKED BY LMW

ADDISON
ADDISON JUNCTION PUBLIC INFRASTRUCTURE IMPROVEMENTS

WATER
STANDARD DETAILS
(SHEET 3 OF 3)

SHEET NUMBER
81

Plotted By: Stephens, Ian November 06, 2026 04:23:29pm C:\ACC\ACCDocs\Kimley-Horn\063543066-ADDISON JUNCTION PUBLIC\Project Files\CADD\PlanSheets\WATER - CITY DETAILS.dwg
This document, together with the concepts and designs presented herein, as an instrument of service, is intended only for the specific purpose and client for which it was prepared. Reuse of and improper reliance on this document without written authorization and adaptation by Kimley-Horn and Associates, Inc. shall be without liability to Kimley-Horn and Associates, Inc.

Plotted By: Wood, Hannah November 10, 2026 - 03:17:24pm G:\ACCT\063543066\Wip\Horn\063543066-ADDISON JUNCTION PUBLIC INFRASTRUCTURE IMPROVEMENTS\Project Files\CAD\PlanSheets\WASTEWATER\WASTEWATER - OVERALL MAP.dwg
This set of drawings, together with the contracts, and designs presented herein, as an instrument of service, is intended only for the specific purpose and client for which it was prepared. Reuse of and improper reliance on this document without written authorization and adaptation by Kimley-Horn and Associates, Inc. shall be without liability to Kimley-Horn and Associates, Inc.

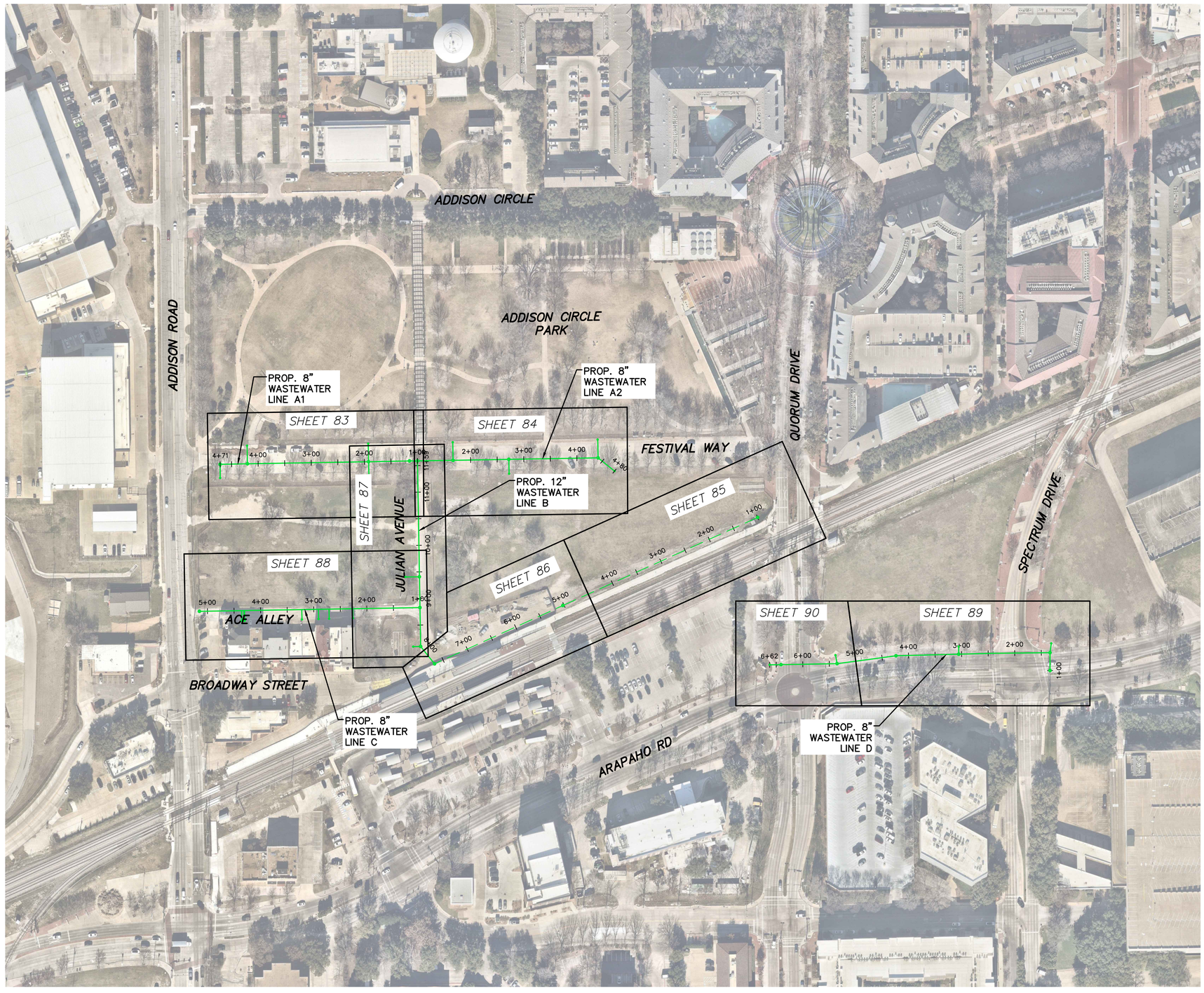

NORTH

GRAPHIC SCALE IN FEET
0 50 100 200

UTILITY LEGEND

- PROP. SANITARY SEWER MANHOLE
- PROPOSED SANITARY SEWER BY OPEN CUT
- PROPOSED SANITARY SEWER BY TRENCHLESS METHODS

Know what's **below.**
Call before you dig.

No.	REVISIONS	DATE	BY

PROJECT NO. C00057/ BID NO. 27-31

Kimley»Horn
225 E. JOHN W. CARPENTER FREEWAY SUITE 1100
IRVING, TX 75062
PHONE: 214-369-2100
WWW.KIMLEY-HORN.COM
© 2026 KIMLEY-HORN AND ASSOCIATES, INC.
TEXAS REGISTERED ENGINEERING FIRM #F-928

11/06/2026

STATE OF TEXAS
HANNAH G. WOOD
162206
LICENSED
PROFESSIONAL ENGINEER

KHA PROJECT	063543066
DATE	11/06/2026
SCALE	AS SHOWN
DESIGNED BY	HGW
DRAWN BY	CIS
CHECKED BY	LMW

ADDISON
ADDISON JUNCTION PUBLIC INFRASTRUCTURE IMPROVEMENTS

WASTEWATER
OVERALL WASTEWATER MAP

SHEET NUMBER
82

Plotted By: Stephanie Lam, November 05, 2025 - 04:23:48pm C:\ACCDocs\KHorn (Horn\06354306-ADDISON PUBLIC\Project Files\24-00\Plansheets\WASTEWATER-FESTIVAL WAY WEST.dwg
This document, together with the concepts and designs presented herein, as an instrument of service, is intended only for the specific purpose and client for which it was prepared. Reuse of and improper reliance on this document without written authorization and adaptation by Kimley-Horn and Associates, Inc. shall be without liability to Kimley-Horn and Associates, Inc.

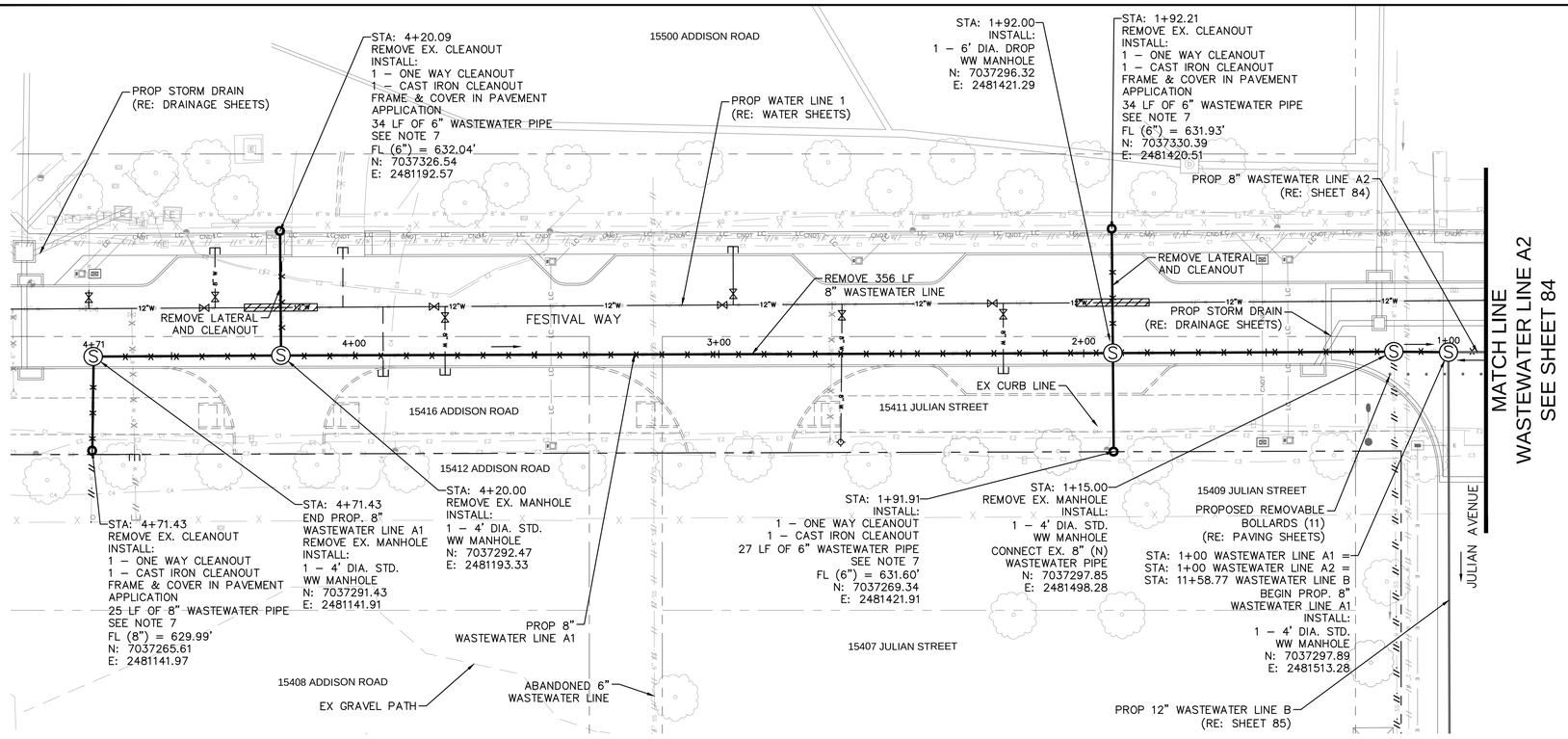

8" WASTEWATER LINE A1

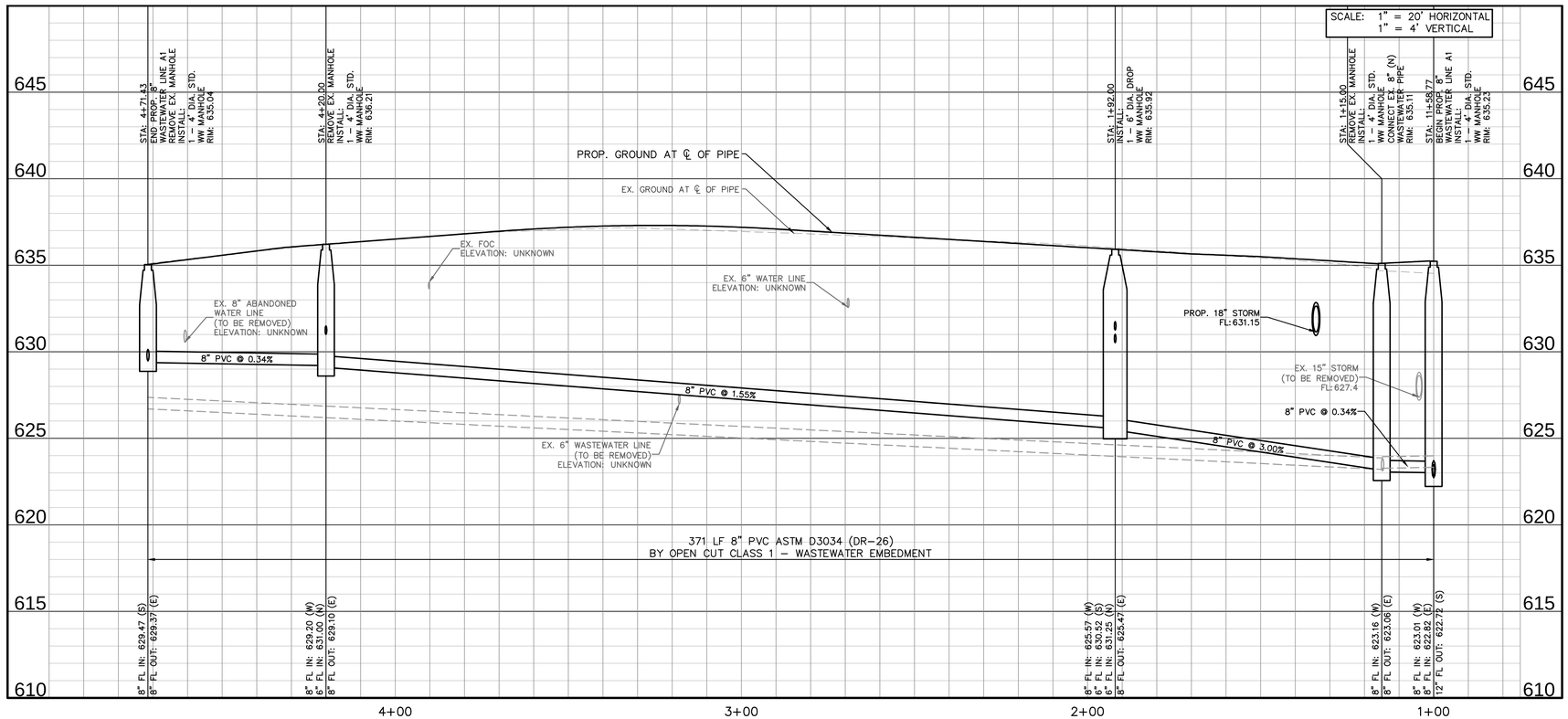

GRAPHIC SCALE IN FEET
0 10 20 40

NORTH

UTILITY LEGEND

- PROPOSED WASTEWATER LINE
- PROP. SANITARY SEWER MANHOLE
- PROPOSED WATER LINE
- PROPOSED BORE WITH STEEL CASING
- PROPOSED WATER VALVE
- PROPOSED FIRE HYDRANT
- EXISTING WATER LINE
- EXISTING FIRE HYDRANT
- EXISTING WATER VALVE
- EXISTING SANITARY SEWER LINE
- EXISTING SANITARY SEWER MANHOLE
- EXISTING STORM SEWER LINE
- EXISTING STORM MANHOLE
- EXISTING OVERHEAD POWER LINE
- EXISTING POWER POLE
- EXISTING FENCE
- EXISTING TREE
- ABANDON EXISTING PIPING
- REMOVE EXISTING PIPING
- EXISTING AT&T FIBER
- EXISTING EXTENET COMM.
- EXISTING FIBERLIGHT COMM.
- EXISTING LOGIX COMM.
- EXISTING MCI COMM.
- EXISTING SPECTRUM COMM.
- EXISTING SPECTRUM FIBER.
- EXISTING LUMEN FIBER
- EXISTING GAS
- EXISTING ONCOR ELECTRIC
- EXISTING PRIVATE ELECTRIC
- TREE REMOVAL

WASTEWATER NOTES

1. LOCATION OF EXISTING LATERALS IS APPROXIMATE. CONTRACTOR SHALL TV INSPECT EXISTING LINE PRIOR TO CONSTRUCTION TO CONFIRM NUMBER AND LOCATION OF EXISTING LATERALS.
2. AT WASTEWATER TIE–IN LOCATIONS WHERE PROPOSED INTERCEPTOR OR COLLECTOR REQUIRES EXISTING WASTEWATER LINES TO BE REMOVED OR TAKEN OUT OF SERVICE, CONTRACTOR SHALL BYPASS PUMP WASTEWATER.
3. CONTRACTOR SHALL SURVEY ALL EXISTING FLOW LINES PRIOR TO CONSTRUCTION. CONTRACTOR SHALL NOTIFY ENGINEER IF DISCREPANCIES TO THESE PLANS EXIST.
4. CONTRACTOR IS RESPONSIBLE FOR GENERAL BYPASS PUMPING SEQUENCE NECESSARY TO INSTALL WASTEWATER LINE A1 AND THE RECONNECTIONS OF EXISTING LATERALS AND CONNECTIONS TO EXISTING MANHOLES.
5. ALL PROPOSED WASTEWATER SERVICE LATERALS SHALL BE SDR 26 PVC PRESSURE PIPE CONFORMING TO ASTM D2241.
6. CONTRACTOR SHALL PROTECT EXISTING FENCE DURING INSTALLATION OF CLEANOUTS AND PLUGS. ANY FENCE DAMAGED BY THE CONTRACTOR SHALL BE RESTORED TO EXISTING OR BETTER CONDITION AT NO ADDITIONAL COST TO THE TOWN.
7. CONTRACTOR SHALL INSTALL ALL WASTEWATER LATERALS AT A MINIMUM SLOPE OF 2.0%, UNLESS OTHERWISE NOTED, AND PROVIDE A MINIMUM OF 4 FEET OF COVER AT THE CLEANOUT LOCATED AT THE PROPERTY LINE. FLOWLINE ELEVATION OF THE PROPOSED LATERAL AT THE WASTEWATER MAIN CONNECTION SHALL BE AS SHOWN ON THE PLANS.

!!WARNING!!

EXISTING UTILITIES IN THE AREA. CONTRACTOR SHALL FIELD VERIFY THE LOCATION OF ALL EXISTING UTILITIES WITH THE PROVIDER PRIOR TO START OF CONSTRUCTION AND SHALL IMMEDIATELY NOTIFY THE ENGINEER OF ANY CONFLICTS DISCOVERED. CONTRACTOR IS RESPONSIBLE FOR COORDINATING UTILITY RELOCATION WHERE NECESSARY AND PROTECTING EXISTING UTILITIES (SHOWN OR NOT SHOWN). IF ANY EXISTING UTILITIES ARE DAMAGED, THE CONTRACTOR SHALL REPLACE THEM AT THEIR OWN EXPENSE.

811 Know what's **below.** **Call** before you dig.

No.	REVISIONS	DATE	BY

PROJECT NO. C00057/ BID NO. 27-31

Kimley»Horn
225 E. JOHN W. CARPENTER FREEWAY SUITE 1100
IRVING, TX 75062
PHONE: 214-565-0660
WWW.KIMLEY-HORN.COM
© 2026 KIMLEY-HORN AND ASSOCIATES, INC.
TEXAS REGISTERED ENGINEERING FIRM #F-928

11/06/2026

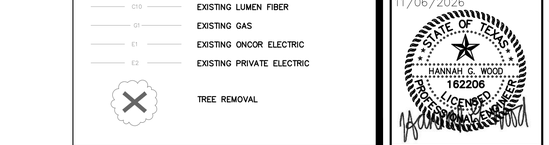

KHA PROJECT	063543066		
DATE	11/06/2026		
SCALE	AS SHOWN	DESIGNED BY	HGW
		DRAWN BY	CJS
		CHECKED BY	LMW

ADDISON
ADDISON JUNCTION
PUBLIC
INFRASTRUCTURE
IMPROVEMENTS

WASTEWATER
WASTEWATER LINE A1
BEGIN TO END

SHEET NUMBER
83

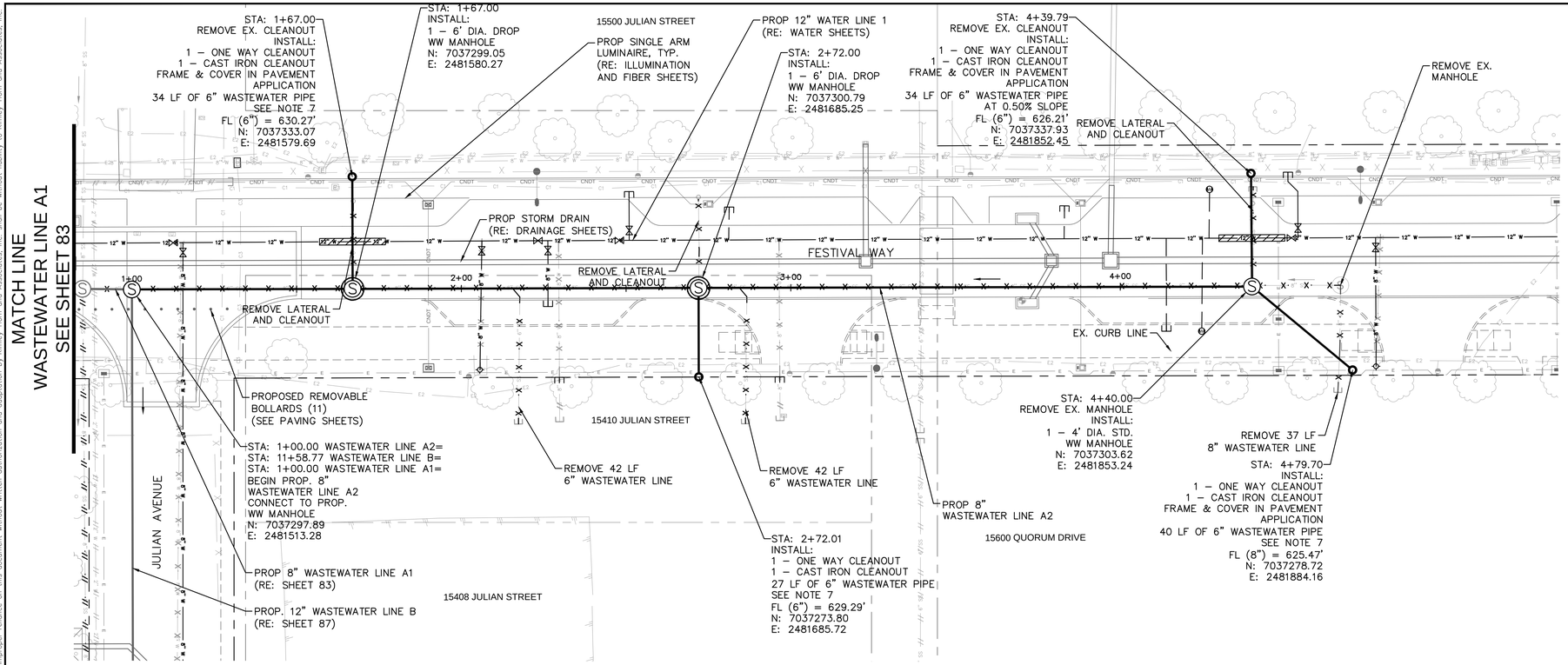

8" WASTEWATER LINE A2

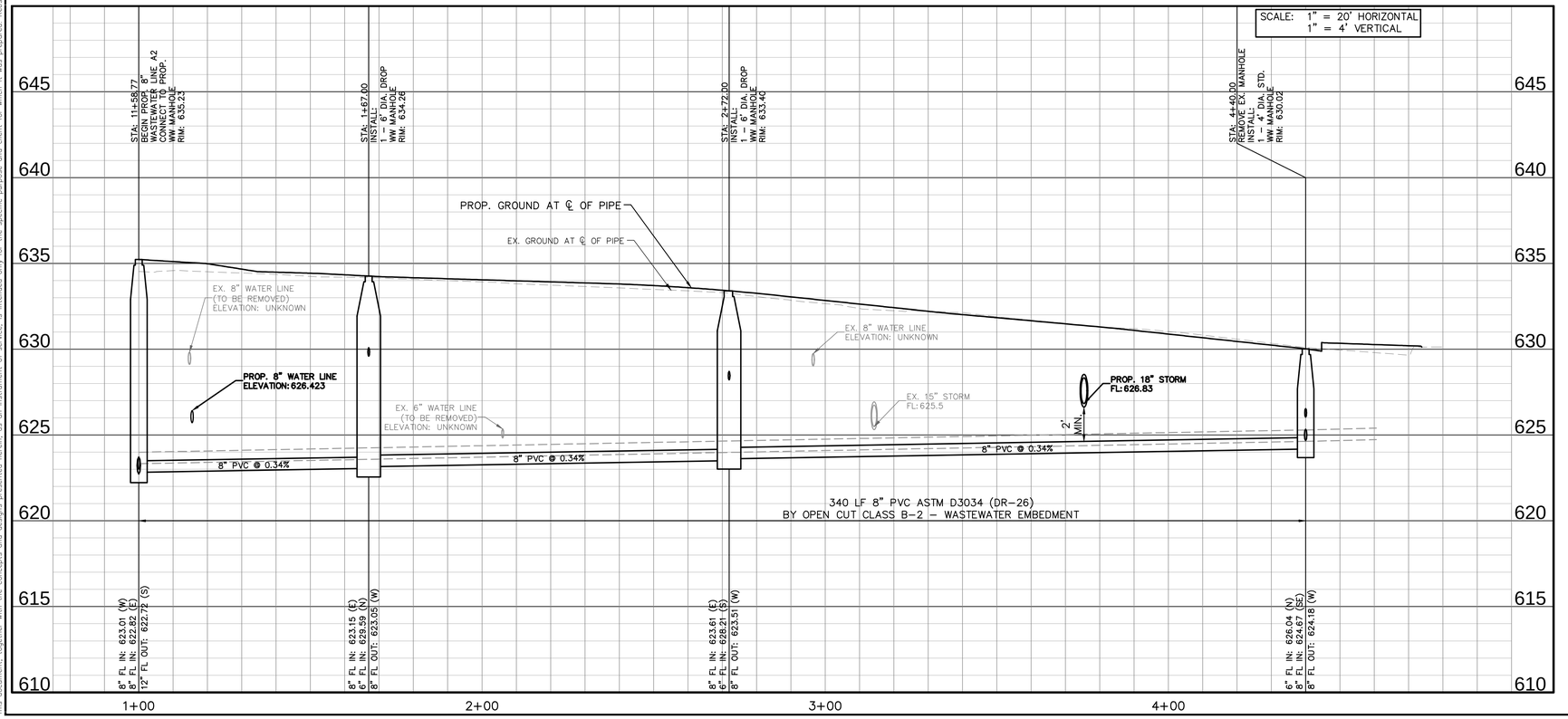

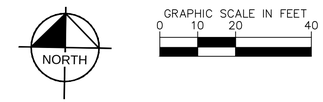

UTILITY LEGEND

- PROPOSED WASTEWATER LINE
- PROP. SANITARY SEWER MANHOLE
- PROPOSED WATER LINE
- PROPOSED BORE WITH STEEL CASING
- PROPOSED WATER VALVE
- PROPOSED FIRE HYDRANT
- EXISTING WATER LINE
- EXISTING FIRE HYDRANT
- EXISTING WATER VALVE
- EXISTING SANITARY SEWER LINE
- EXISTING SANITARY SEWER MANHOLE
- EXISTING STORM SEWER LINE
- EXISTING STORM MANHOLE
- EXISTING OVERHEAD POWER LINE
- EXISTING POWER POLE
- EXISTING FENCE
- EXISTING TREE
- ABANDON EXISTING PIPING
- REMOVE EXISTING PIPING
- EXISTING AT&T FIBER
- EXISTING EXTENET COMM.
- EXISTING FIBERLIGHT COMM.
- EXISTING LOGIX COMM.
- EXISTING MCI COMM.
- EXISTING SPECTRUM COMM.
- EXISTING SPECTRUM FIBER.
- EXISTING LUMEN FIBER
- EXISTING GAS
- EXISTING ONCOR ELECTRIC
- EXISTING PRIVATE ELECTRIC
- TREE REMOVAL

WASTEWATER NOTES

1. LOCATION OF EXISTING LATERALS IS APPROXIMATE. CONTRACTOR SHALL TV INSPECT EXISTING LINE PRIOR TO CONSTRUCTION TO CONFIRM NUMBER AND LOCATION OF EXISTING LATERALS.
2. AT WASTEWATER TIE–IN LOCATIONS WHERE PROPOSED INTERCEPTOR OR COLLECTOR REQUIRES EXISTING WASTEWATER LINES TO BE REMOVED OR TAKEN OUT OF SERVICE, CONTRACTOR SHALL BYPASS PUMP WASTEWATER.
3. CONTRACTOR SHALL SURVEY ALL EXISTING FLOW LINES PRIOR TO CONSTRUCTION. CONTRACTOR SHALL NOTIFY ENGINEER IF DISCREPANCIES TO THESE PLANS EXIST.
4. CONTRACTOR IS RESPONSIBLE FOR GENERAL BYPASS PUMPING SEQUENCE NECESSARY TO INSTALL WASTEWATER LINE A2 AND THE RECONNECTIONS OF EXISTING LATERALS AND CONNECTIONS TO EXISTING MANHOLES.
5. ALL PROPOSED WASTEWATER SERVICE LATERALS SHALL BE SDR 26 PVC PRESSURE PIPE CONFORMING TO ASTM D2241.
6. CONTRACTOR SHALL PROTECT EXISTING FENCE DURING INSTALLATION OF CLEANOUTS AND PLUGS. ANY FENCE DAMAGED BY THE CONTRACTOR SHALL BE RESTORED TO EXISTING OR BETTER CONDITION AT NO ADDITIONAL COST TO THE TOWN.
7. CONTRACTOR SHALL INSTALL ALL WASTEWATER LATERALS AT A MINIMUM SLOPE OF 2.0%, UNLESS OTHERWISE NOTED, AND PROVIDE A MINIMUM OF 4 FEET OF COVER AT THE CLEANOUT LOCATED AT THE PROPERTY LINE. FLOWLINE ELEVATION OF THE PROPOSED LATERAL AT THE WASTEWATER MAIN CONNECTION SHALL BE AS SHOWN ON THE PLANS.

!!WARNING!!

EXISTING UTILITIES IN THE AREA. CONTRACTOR SHALL FIELD VERIFY THE LOCATION OF ALL EXISTING UTILITIES WITH THE PROVIDER PRIOR TO START OF CONSTRUCTION AND SHALL IMMEDIATELY NOTIFY THE ENGINEER OF ANY CONFLICTS DISCOVERED. CONTRACTOR IS RESPONSIBLE FOR COORDINATING UTILITY RELOCATION WHERE NECESSARY AND PROTECTING EXISTING UTILITIES (SHOWN OR NOT SHOWN). IF ANY EXISTING UTILITIES ARE DAMAGED, THE CONTRACTOR SHALL REPLACE THEM AT THEIR OWN EXPENSE.

811 Know what's below. Call before you dig.

No.	REVISIONS	DATE	BY

PROJECT NO. C00057/ BID NO. 27-31

Kimley»Horn
225 E. JOHN W. CARPENTER FREEWAY SUITE 1100
IRVING, TX 75062
PHONE: 214-369-6500
WWW.KIMLEY-HORN.COM
© 2026 KIMLEY-HORN AND ASSOCIATES, INC.
TEXAS REGISTERED ENGINEERING FIRM #F-928

11/06/2026

STATE OF TEXAS
HANNAH G. WOOD
162206
LICENSED
PROFESSIONAL ENGINEER

KHA PROJECT	063543066
DATE	11/06/2026
SCALE	AS SHOWN
DESIGNED BY	HGW
DRAWN BY	CJS
CHECKED BY	LMW

ADDISON
ADDISON JUNCTION PUBLIC INFRASTRUCTURE IMPROVEMENTS

WASTEWATER
WASTEWATER LINE A2 BEGIN TO END

SHEET NUMBER
84

Plotted By: Stephanie Jan November 06, 2026 - 04:23:59pm G:\ACAD\Docs\Vintage Hills\063543066-ADDISON JUNCTION PUBLIC\Project Files\2400\PlanSheets\WASTEWATER_FESTIVAL WAY EAST.dwg
This document, together with the concepts and designs presented herein, as an instrument of service, is intended only for the specific purpose and client for which it was prepared. Reuse of and improper reliance on this document without written authorization and adaptation by Kimley-Horn and Associates, Inc. shall be without liability to Kimley-Horn and Associates, Inc.

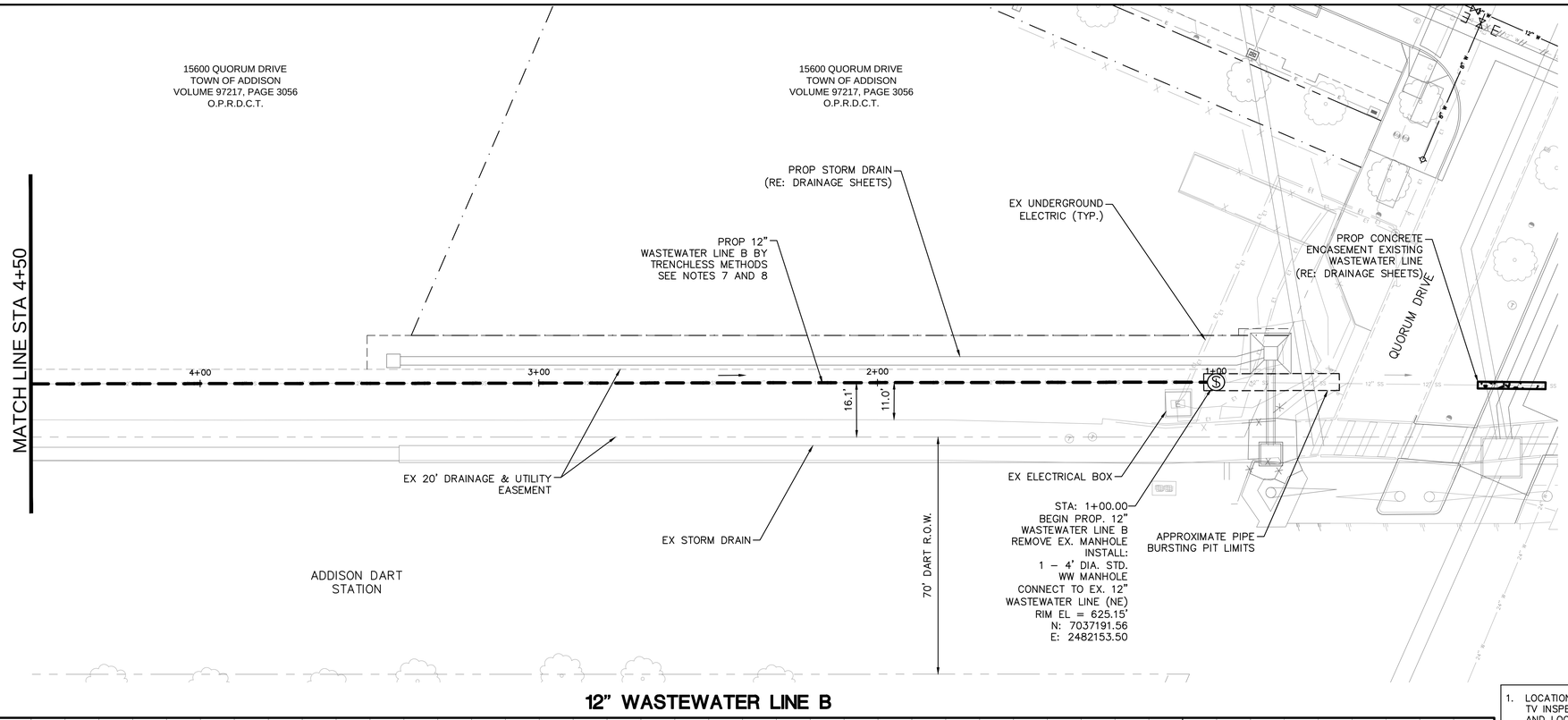

12" WASTEWATER LINE B

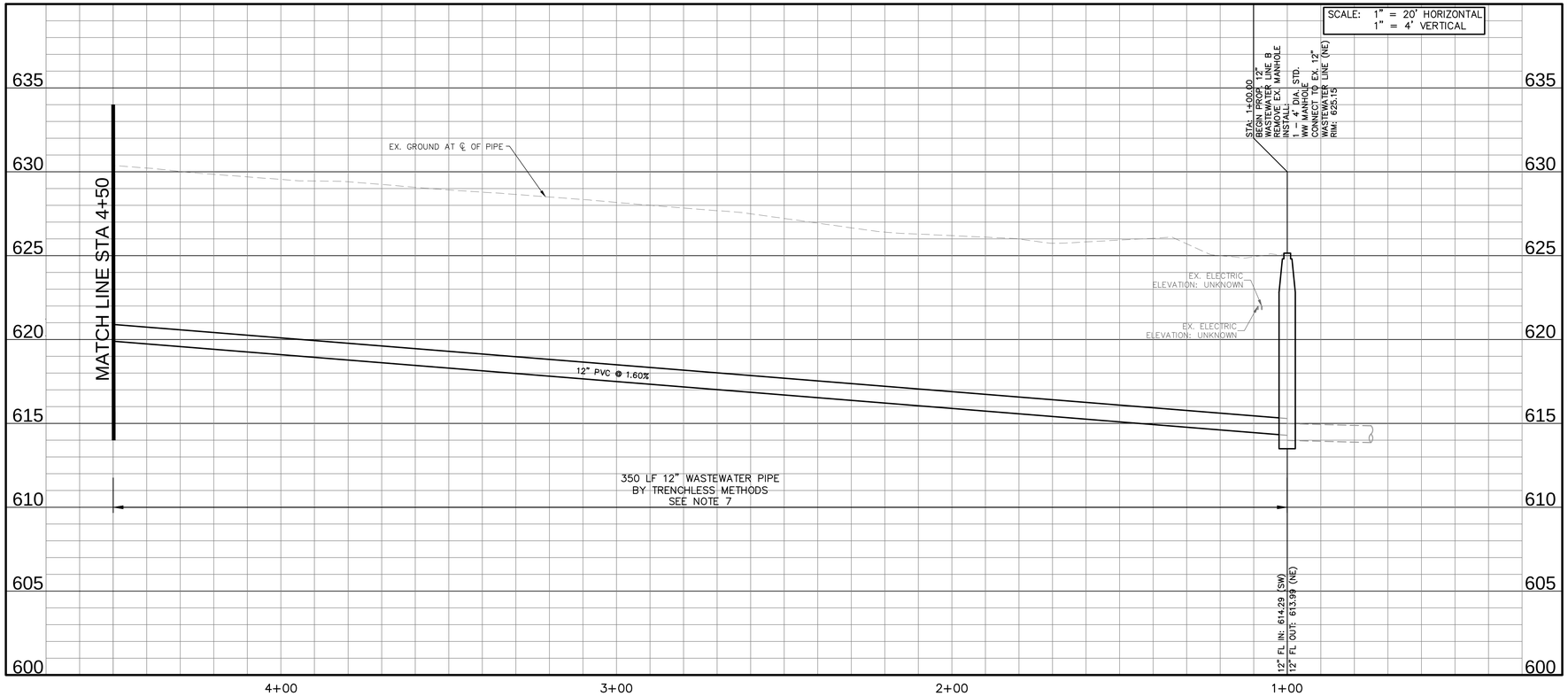

GRAPHIC SCALE IN FEET
0 10 20 40

NORTH

UTILITY LEGEND

- PROPOSED TRENCHLESS WASTEWATER LINE
- PROPOSED WASTEWATER LINE
- PROP. SANITARY SEWER MANHOLE
- PROPOSED WATER LINE
- PROPOSED BORE WITH STEEL CASING
- PROPOSED CONCRETE ENCASEMENT
- PROPOSED WATER VALVE
- PROPOSED FIRE HYDRANT
- EXISTING WATER LINE
- EXISTING FIRE HYDRANT
- EXISTING WATER VALVE
- EXISTING SANITARY SEWER LINE
- EXSITING SANITARY SEWER MANHOLE
- EXISTING STORM SEWER LINE
- EXISTING OVERHEAD POWER LINE
- EXISTING POWER POLE
- EXSITING FENCE
- EXISTING TREE
- ABANDON EXISTING PIPING
- REMOVE EXISTING PIPING
- EXISTING AT&T FIBER
- EXISTING EXTENET COMM.
- EXISTING FIBERLIGHT COMM.
- EXISTING LOGIX COMM.
- EXISTING MCI COMM.
- EXISTING SPECTRUM COMM.
- EXISTING SPECTRUM FIBER.
- EXISTING LUMEN FIBER
- EXISTING GAS
- EXISTING ONCOR ELECTRIC
- EXISTING PRIVATE ELECTRIC

WASTEWATER NOTES

1. LOCATION OF EXISTING LATERALS IS APPROXIMATE. CONTRACTOR SHALL TV INSPECT EXISTING LINE PRIOR TO CONSTRUCTION TO CONFIRM NUMBER AND LOCATION OF EXISTING LATERALS.
2. CONTRACTOR TO UTILIZE BYPASS PUMPING AS NEEDED TO MAINTAIN SERVICE AND KEEP FLOW CONTAINED THROUGHOUT THE DURATION OF THE PROJECT.
3. CONTRACTOR SHALL SURVEY ALL EXISTING FLOW LINES PRIOR TO CONSTRUCTION. CONTRACTOR SHALL NOTIFY ENGINEER IF DISCREPANCIES TO THESE PLANS EXIST.
4. CONTRACTOR IS RESPONSIBLE FOR GENERAL BYPASS PUMPING SEQUENCE NECESSARY TO INSTALL WASTEWATER LINE B AND THE RECONNECTIONS OF EXISTING LATERALS AND CONNECTIONS TO EXISTING MANHOLES.
5. CONTRACTOR SHALL REMOVE AND REPLACE TRAIL PAVEMENT, EXISTING FENCE, AND ANY PORTION OF THE TRAIL DISTURBED DURING INSTALLATION AND CONSTRUCTION OF THE PROPOSED WASTEWATER LINE. CONTRACTOR SHALL REPLACE THE FULL PAVEMENT PANELS, MATCH EXISTING THICKNESS AND REINFORCEMENT AND RESTORE ALL DISTURBED AREAS TO THEIR ORIGINAL CONDITION.
6. ALL PROPOSED WASTEWATER SERVICE LATERALS SHALL BE SDR 26 PVC PRESSURE PIPE CONFORMING TO ASTM D2241.
7. PROPOSED SEWER PIPE SHALL BE INSTALLED BY TRENCHLESS CONSTRUCTION METHODS WHERE INDICATED ON THE PLANS. TRENCHLESS INSTALLATION SHALL BE PERFORMED USING PIPE BURSTING OR CURED–IN–PLACE PIPE (CIPP) LINING BY A CONTRACTOR EXPERIENCED AND CERTIFIED BY THE MANUFACTURER FOR THE SPECIFIED INSTALLATION METHOD.
8. CONTRACTOR SHALL COORDINATE ALL CONSTRUCTION ACTIVITIES NEAR DART FACILITIES WITH DART PRIOR TO CONSTRUCTION. CONTRACTOR SHALL PROTECT ALL EXISTING DART INFRASTRUCTURE AND SHALL NOTIFY AND COORDINATE WITH DART PRIOR TO ANY TRENCHLESS CONSTRUCTION ACTIVITIES.

!!WARNING!!

EXISTING UTILITIES IN THE AREA. CONTRACTOR SHALL FIELD VERIFY THE LOCATION OF ALL EXISTING UTILITIES WITH THE PROVIDER PRIOR TO START OF CONSTRUCTION AND SHALL IMMEDIATELY NOTIFY THE ENGINEER OF ANY CONFLICTS DISCOVERED. CONTRACTOR IS RESPONSIBLE FOR COORDINATING UTILITY RELOCATION WHERE NECESSARY AND PROTECTING EXISTING UTILITIES (SHOWN OR NOT SHOWN). IF ANY EXISTING UTILITIES ARE DAMAGED, THE CONTRACTOR SHALL REPLACE THEM AT THEIR OWN EXPENSE.

811
Know what's **below.**
Call before you dig.

No.	REVISIONS	DATE	BY

PROJECT NO. C00057/ BID NO. 27–31

Kimley»Horn
225 E. JOHN W. CARPENTER FREEWAY SUITE 1100
IRVING, TX 75062
PHONE: 214-369-6500
WWW.KIMLEY-HORN.COM
© 2026 KIMLEY-HORN AND ASSOCIATES, INC.
TEXAS REGISTERED ENGINEERING FIRM #F-928

11/06/2026



KHA PROJECT 063543066	DATE 11/06/2026		
SCALE AS SHOWN	DESIGNED BY HGW	DRAWN BY C/S	CHECKED BY LMW

ADDISON
ADDISON JUNCTION PUBLIC INFRASTRUCTURE IMPROVEMENTS

WASTEWATER LINE B
BEGIN TO STA 4+50

SHEET NUMBER
85

Plotted By: Stephanie Lam November 05, 2026 - 04:24:11pm G:\ACT\ACCDocs\Kimley-Horn\06354306E-ADDISON JUNCTION PUBLIC\Project Files\CAD\Plan Sheets\WASTEWATER_JULIAN AVENUE.dwg
This document, together with the concepts and designs presented herein, as an instrument of service, is intended only for the specific purpose and client for which it was prepared. Reuse of and improper reliance on this document without written authorization and adaptation by Kimley-Horn and Associates, Inc. shall be without liability to Kimley-Horn and Associates, Inc.

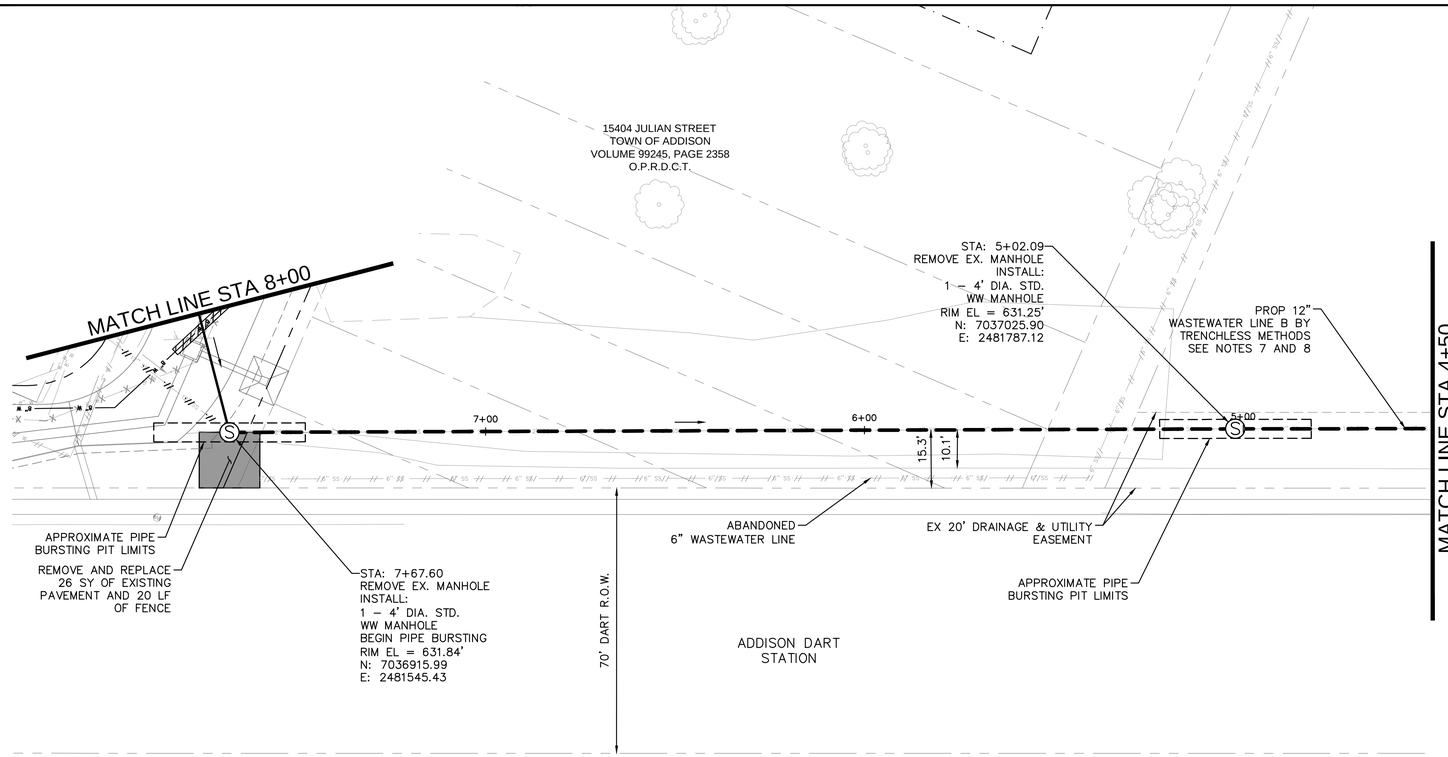

12" WASTEWATER LINE B

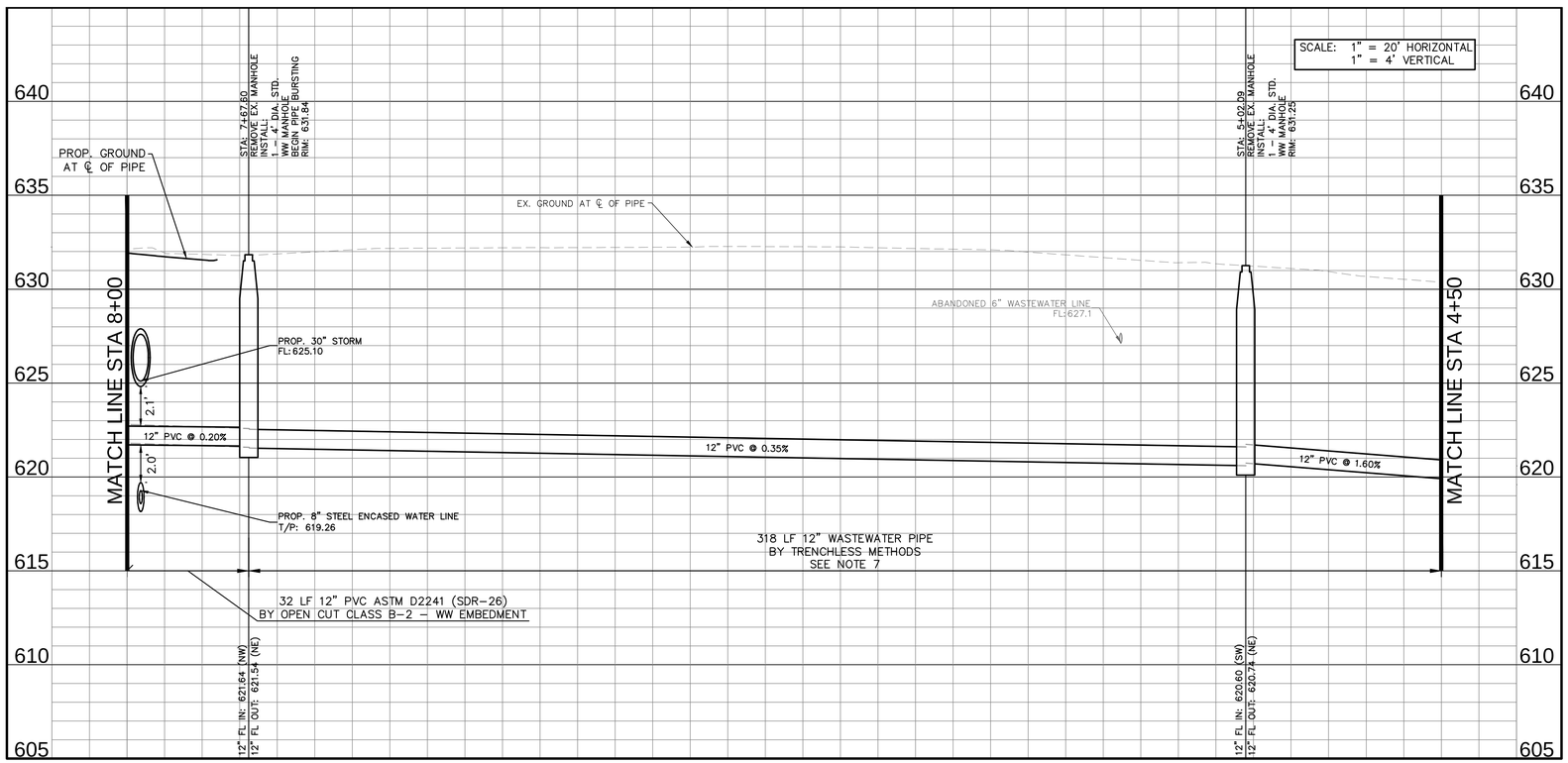

GRAPHIC SCALE IN FEET
0 10 20 40

NORTH

UTILITY LEGEND

- PROPOSED TRENCHLESS WASTEWATER LINE
- PROPOSED WASTEWATER LINE
- PROP. SANITARY SEWER MANHOLE
- x" W — PROPOSED WATER LINE
- PROPOSED BORE WITH STEEL CASING
- PROPOSED WATER VALVE
- PROPOSED FIRE HYDRANT
- x" W — EXISTING WATER LINE
- EXISTING FIRE HYDRANT
- EXISTING WATER VALVE
- x" SS — EXISTING SANITARY SEWER LINE
- EXSITING SANITARY SEWER MANHOLE
- EXISTING STORM SEWER LINE
- OHE — EXISTING OVERHEAD POWER LINE
- EXISTING POWER POLE
- x — EXSITING FENCE
- EXISTING TREE
- P — ABANDON EXISTING PIPING
- X X X — REMOVE EXISTING PIPING
- C2 — EXISTING AT&T FIBER
- C3 — EXISTING EXTENET COMM.
- C4 — EXISTING FIBERLIGHT COMM.
- C5 — EXISTING LOGIX COMM.
- C6 — EXISTING MCI COMM.
- C7 — EXISTING SPECTRUM COMM.
- C8 — EXISTING SPECTRUM FIBER.
- C10 — EXISTING LUMEN FIBER
- G1 — EXISTING GAS
- E1 — EXISTING ONCOR ELECTRIC
- E2 — EXISTING PRIVATE ELECTRIC

WASTEWATER NOTES

1. LOCATION OF EXISTING LATERALS IS APPROXIMATE. CONTRACTOR SHALL TV INSPECT EXISTING LINE PRIOR TO CONSTRUCTION TO CONFIRM NUMBER AND LOCATION OF EXISTING LATERALS.
2. CONTRACTOR TO UTILIZE BYPASS PUMPING AS NEEDED TO MAINTAIN SERVICE AND KEEP FLOW CONTAINED THROUGHOUT THE DURATION OF THE PROJECT.
3. CONTRACTOR SHALL SURVEY ALL EXISTING FLOW LINES PRIOR TO CONSTRUCTION. CONTRACTOR SHALL NOTIFY ENGINEER IF DISCREPANCIES TO THESE PLANS EXIST.
4. CONTRACTOR IS RESPONSIBLE FOR GENERAL BYPASS PUMPING SEQUENCE NECESSARY TO INSTALL WASTEWATER LINE B AND THE RECONNECTIONS OF EXISTING LATERALS AND CONNECTIONS TO EXISTING MANHOLES.
5. CONTRACTOR SHALL REMOVE AND REPLACE TRAIL PAVEMENT, EXISTING FENCE, AND ANY PORTION OF THE TRAIL DISTURBED DURING INSTALLATION AND CONSTRUCTION OF THE PROPOSED WASTEWATER LINE. CONTRACTOR SHALL REPLACE THE FULL PAVEMENT PANELS, MATCH EXISTING THICKNESS AND REINFORCEMENT AND RESTORE ALL DISTURBED AREAS TO THEIR ORIGINAL CONDITION.
6. ALL PROPOSED WASTEWATER SERVICE LATERALS SHALL BE SDR 26 PVC PRESSURE PIPE CONFORMING TO ASTM D2241.
7. PROPOSED SEWER PIPE SHALL BE INSTALLED BY TRENCHLESS CONSTRUCTION METHODS WHERE INDICATED ON THE PLANS. TRENCHLESS INSTALLATION SHALL BE PERFORMED USING PIPE BURSTING OR CURED-IN-PLACE PIPE (CIPP) LINING BY A CONTRACTOR EXPERIENCED AND CERTIFIED BY THE MANUFACTURER FOR THE SPECIFIED INSTALLATION METHOD.
8. CONTRACTOR SHALL COORDINATE ALL CONSTRUCTION ACTIVITIES NEAR DART FACILITIES WITH DART PRIOR TO CONSTRUCTION. CONTRACTOR SHALL PROTECT ALL EXISTING DART INFRASTRUCTURE AND SHALL NOTIFY AND COORDINATE WITH DART PRIOR TO ANY TRENCHLESS CONSTRUCTION ACTIVITIES.

!!WARNING!!

EXISTING UTILITIES IN THE AREA. CONTRACTOR SHALL FIELD VERIFY THE LOCATION OF ALL EXISTING UTILITIES WITH THE PROVIDER PRIOR TO START OF CONSTRUCTION AND SHALL IMMEDIATELY NOTIFY THE ENGINEER OF ANY CONFLICTS DISCOVERED. CONTRACTOR IS RESPONSIBLE FOR COORDINATING UTILITY RELOCATION WHERE NECESSARY AND PROTECTING EXISTING UTILITIES (SHOWN OR NOT SHOWN). IF ANY EXISTING UTILITIES ARE DAMAGED, THE CONTRACTOR SHALL REPLACE THEM AT THEIR OWN EXPENSE.

811 Know what's **below.** **Call** before you dig.

No.	REVISIONS	DATE	BY

PROJECT NO. C00057/ BID NO. 27-31

Kimley»Horn
225 E. JOHN W. CARPENTER FREEWAY SUITE 1100
IRVING, TX 75062
PHONE: 214.369.6500
WWW.KIMLEY-HORN.COM
© 2026 KIMLEY-HORN AND ASSOCIATES, INC.
TEXAS REGISTERED ENGINEERING FIRM #F-928

11/06/2026



KHA PROJECT 063543066			
DATE 11/06/2026	SCALE	AS SHOWN	
	DESIGNED BY	HGW	
	DRAWN BY	CIS	
	CHECKED BY	LMW	

ADDISON
ADDISON JUNCTION
PUBLIC
INFRASTRUCTURE
IMPROVEMENTS

WASTEWATER LINE B
STA 4+50 TO STA 8+00

SHEET NUMBER
86

Plotted By: Stephens, Ian November 06, 2026 04:24:16pm C:\ACCUACDocs\Virtual Drives\Irving-Hotel\063543066-ADDISON JUNCTION PUBLIC\Project Files\CAD\Pro-Sheets\WASTEWATER-JULIAN AVENUE.dwg
This document, together with the concepts and designs presented herein, as an instrument of service, is intended only for the specific purpose and client for which it was prepared. Reuse of and improper reliance on this document without written authorization and adaptation by Kimley-Horn and Associates, Inc. shall be without liability to Kimley-Horn and Associates, Inc.

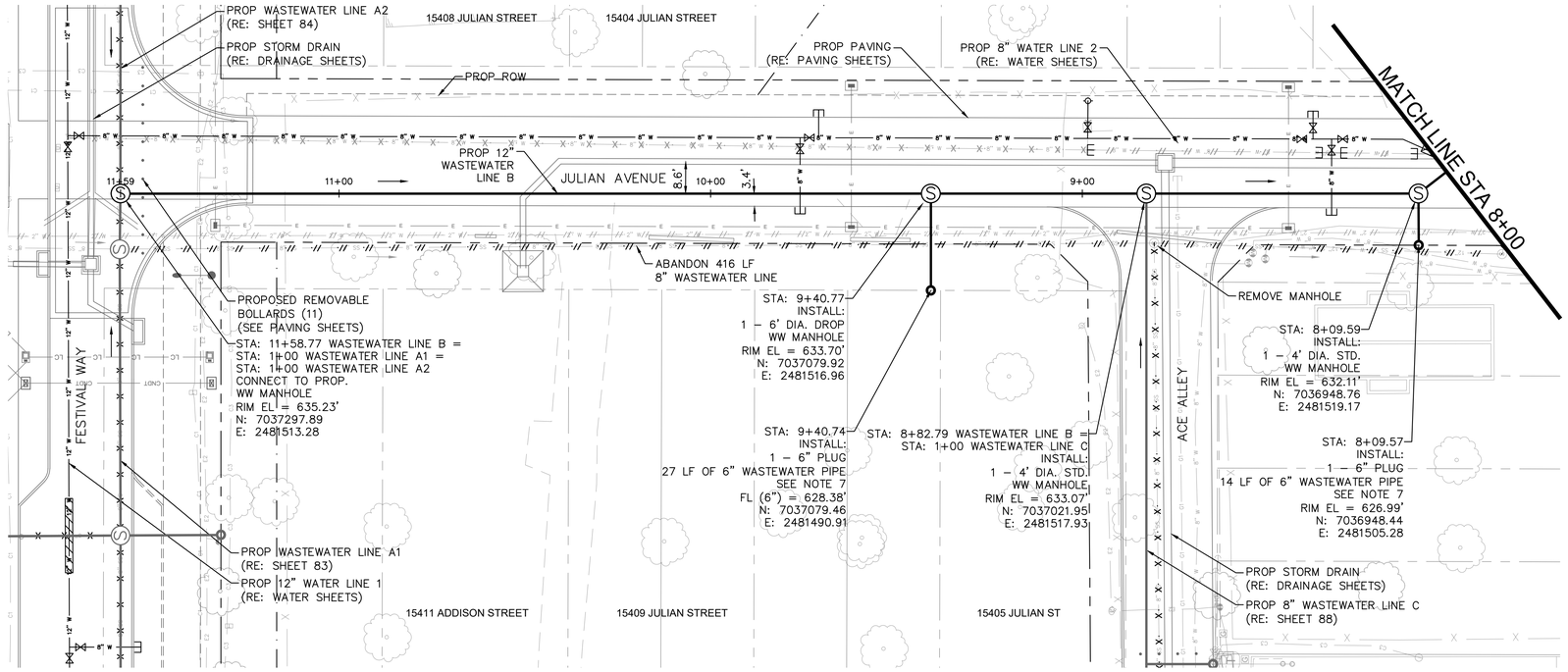

12" WASTEWATER LINE B

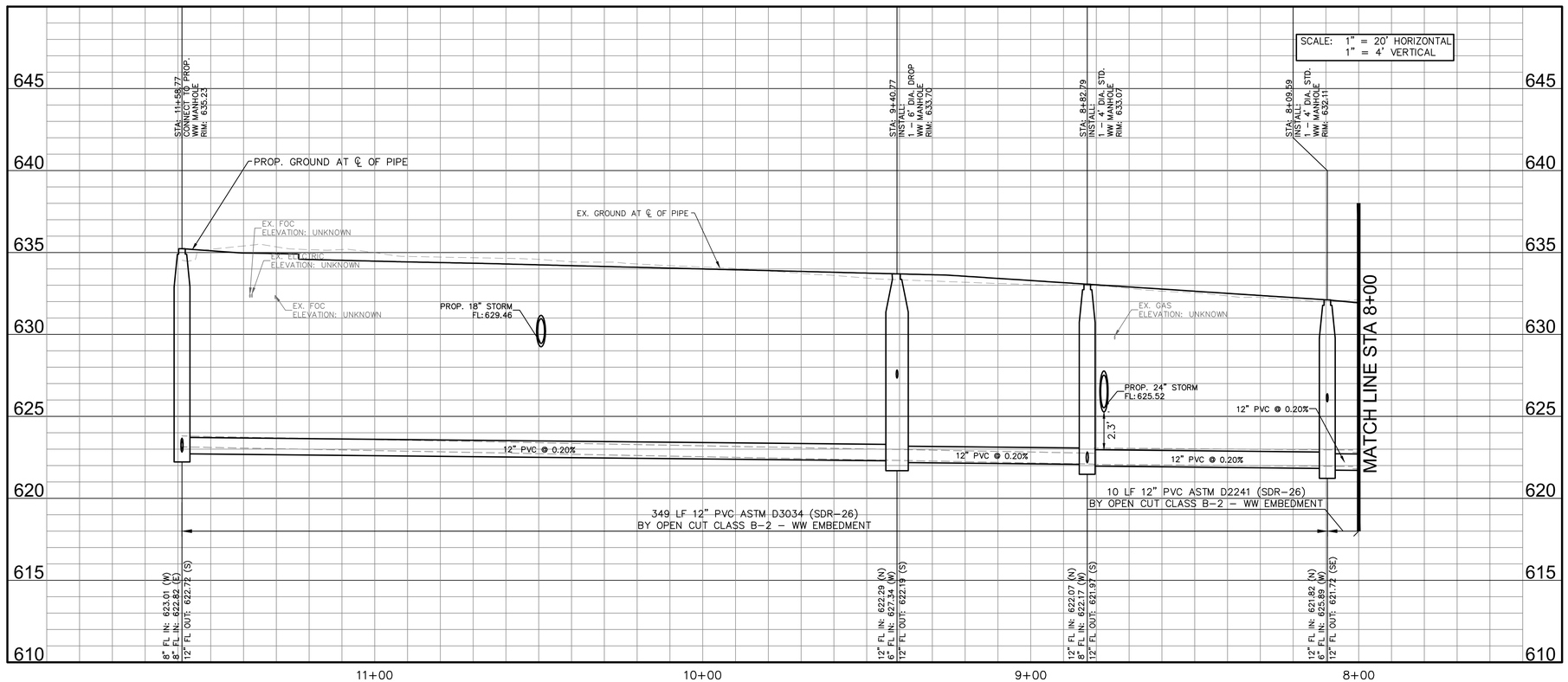

GRAPHIC SCALE IN FEET
0 10 20 40

NORTH

UTILITY LEGEND

- PROPOSED WASTEWATER LINE
- PROP. SANITARY SEWER MANHOLE
- PROPOSED WATER LINE
- PROPOSED BORE WITH STEEL CASING
- PROPOSED WATER VALVE
- PROPOSED FIRE HYDRANT
- EXISTING WATER LINE
- EXISTING FIRE HYDRANT
- EXISTING WATER VALVE
- EXISTING SANITARY SEWER LINE
- EXSITING SANITARY SEWER MANHOLE
- EXISTING STORM SEWER LINE
- EXISTING OVERHEAD POWER LINE
- EXISTING POWER POLE
- EXSITING FENCE
- EXISTING TREE
- ABANDON EXISTING PIPING
- REMOVE EXISTING PIPING
- EXISTING AT&T FIBER
- EXISTING EXTENET COMM.
- EXISTING FIBERLIGHT COMM.
- EXISTING LOGIX COMM.
- EXISTING MCI COMM.
- EXISTING SPECTRUM COMM.
- EXISTING SPECTRUM FIBER.
- EXISTING LUMEN FIBER
- EXISTING GAS
- EXISTING ONCOR ELECTRIC
- EXISTING PRIVATE ELECTRIC

WASTEWATER NOTES

1. LOCATION OF EXISTING LATERALS IS APPROXIMATE. CONTRACTOR SHALL TV INSPECT EXISTING LINE PRIOR TO CONSTRUCTION TO CONFIRM NUMBER AND LOCATION OF EXISTING LATERALS.
2. CONTRACTOR TO UTILIZE BYPASS PUMPING AS NEEDED TO MAINTAIN SERVICE AND KEEP FLOW CONTAINED THROUGHOUT THE DURATION OF THE PROJECT.
3. CONTRACTOR SHALL SURVEY ALL EXISTING FLOW LINES PRIOR TO CONSTRUCTION. CONTRACTOR SHALL NOTIFY ENGINEER IF DISCREPANCIES TO THESE PLANS EXIST.
4. CONTRACTOR IS RESPONSIBLE FOR GENERAL BYPASS PUMPING SEQUENCE NECESSARY TO INSTALL WASTEWATER LINE B AND THE RECONNECTIONS OF EXISTING LATERALS AND CONNECTIONS TO EXISTING MANHOLES.
5. CONTRACTOR SHALL REMOVE AND REPLACE TRAIL PAVEMENT, EXISTING FENCE, AND ANY PORTION OF THE TRAIL DISTURBED DURING INSTALLATION AND CONSTRUCTION OF THE PROPOSED WASTEWATER LINE. CONTRACTOR SHALL REPLACE THE FULL PAVEMENT PANELS, MATCH EXISTING THICKNESS AND REINFORCEMENT AND RESTORE ALL DISTURBED AREAS TO THEIR ORIGINAL CONDITION.
6. ALL PROPOSED WASTEWATER SERVICE LATERALS SHALL BE SDR 26 PVC PRESSURE PIPE CONFORMING TO ASTM D2241.
7. CONTRACTOR SHALL INSTALL ALL WASTEWATER LATERALS AT A MINIMUM SLOPE OF 2.0%, UNLESS OTHERWISE NOTED, AND PROVIDE A MINIMUM OF 4 FEET OF COVER AT THE CLEANOUT LOCATED AT THE PROPERTY LINE. FLOWLINE ELEVATION OF THE PROPOSED LATERAL AT THE WASTEWATER MAIN CONNECTION SHALL BE AS SHOWN ON THE PLANS.

!!WARNING!!

EXISTING UTILITIES IN THE AREA. CONTRACTOR SHALL FIELD VERIFY THE LOCATION OF ALL EXISTING UTILITIES WITH THE PROVIDER PRIOR TO START OF CONSTRUCTION AND SHALL IMMEDIATELY NOTIFY THE ENGINEER OF ANY CONFLICTS DISCOVERED. CONTRACTOR IS RESPONSIBLE FOR COORDINATING UTILITY RELOCATION WHERE NECESSARY AND PROTECTING EXISTING UTILITIES (SHOWN OR NOT SHOWN). IF ANY EXISTING UTILITIES ARE DAMAGED, THE CONTRACTOR SHALL REPLACE THEM AT THEIR OWN EXPENSE.

811 Know what's below. Call before you dig.

No.	REVISIONS	DATE	BY

PROJECT NO. C00057/ BID NO. 27-31

Kimley»Horn
225 E. JOHN W. CARPENTER FREEWAY SUITE 1100
IRVING, TX 75062
PHONE: 214-369-2100
WWW.KIMLEY-HORN.COM
© 2026 KIMLEY-HORN AND ASSOCIATES, INC.
TEXAS REGISTERED ENGINEERING FIRM #F-928

11/06/2026

HANNAH G. WOOD
162206
LICENSED
PROFESSIONAL ENGINEER

KHA PROJECT 063543066
DATE 11/06/2026
SCALE AS SHOWN | DESIGNED BY HGW | DRAWN BY CIS | CHECKED BY LMW

ADDISON
ADDISON JUNCTION PUBLIC INFRASTRUCTURE IMPROVEMENTS

WASTEWATER LINE B
STA 8+00 TO END

SHEET NUMBER
87

Plotted By: Wood, Hannah November 10, 2026 - 03:16:10pm G:\ACCUACD\cas\Vinny-Hton\063543066-ADDISON JUNCTION PUBLIC\Project Files\2400\Pro-Sheets\WASTEWATER-JULIAN AVENUE.dwg
This document, together with the concepts and designs presented herein, as an instrument of service, is intended only for the specific purpose and client for which it was prepared. Reuse of and improper reliance on this document without written authorization and adaptation by Kimley-Horn and Associates, Inc. shall be without liability to Kimley-Horn and Associates, Inc.

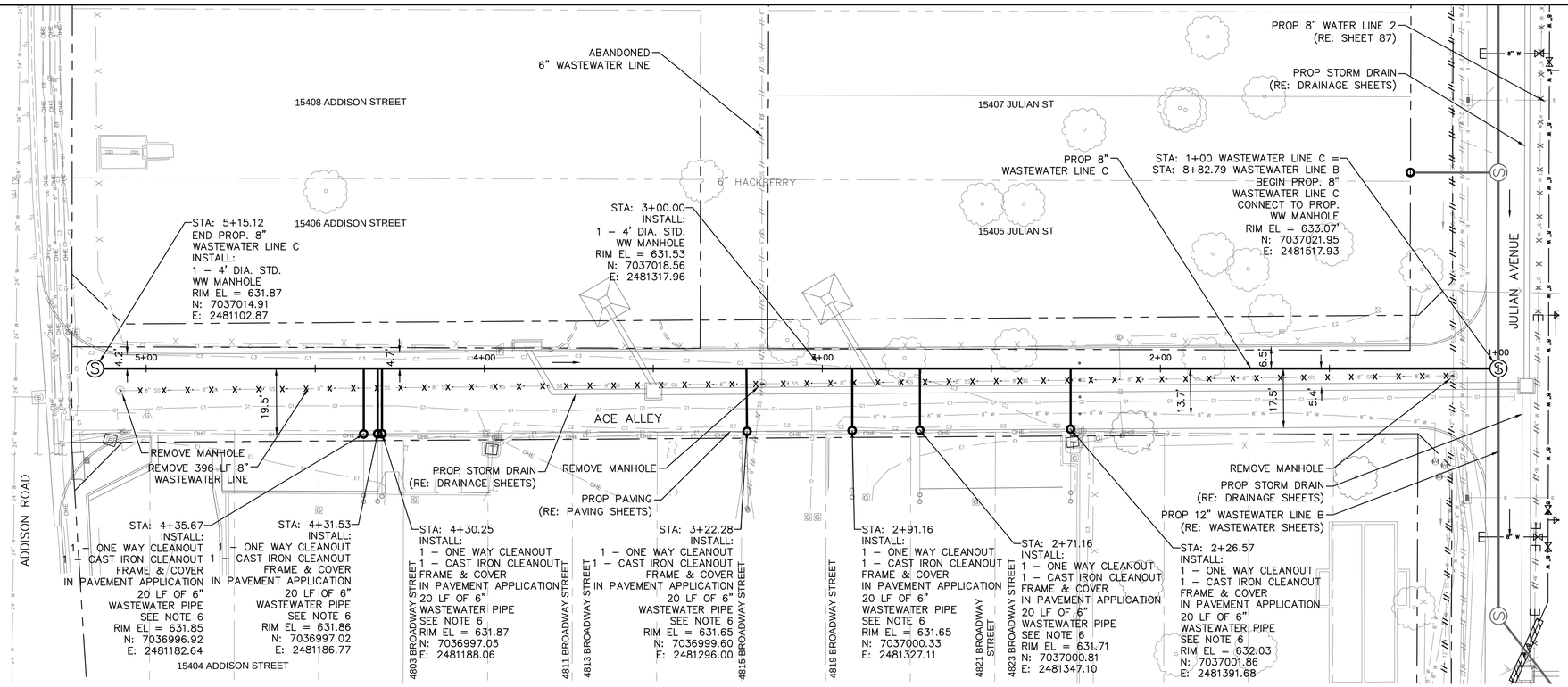

8" WASTEWATER LINE C

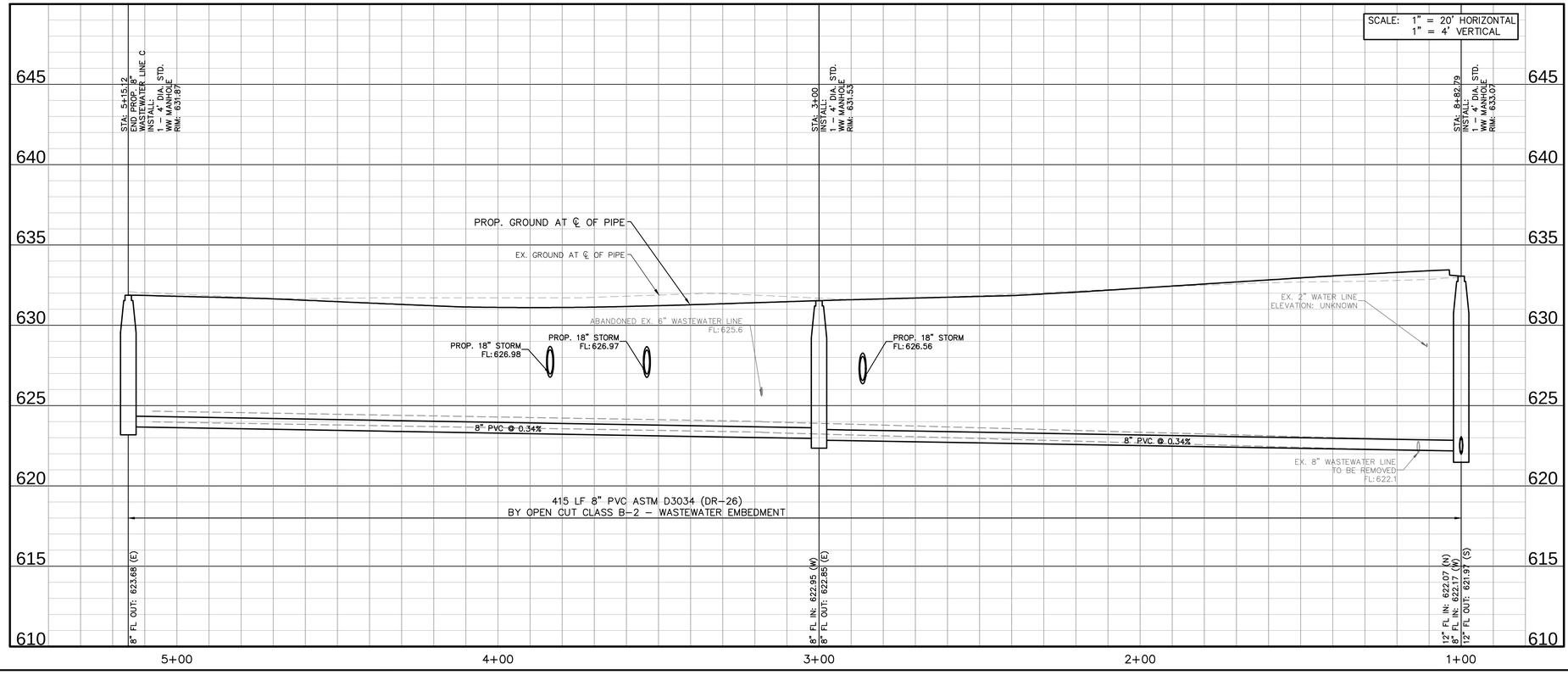

GRAPHIC SCALE IN FEET
0 10 20 40

NORTH

UTILITY LEGEND

- PROPOSED WASTEWATER LINE
- PROP. SANITARY SEWER MANHOLE
- PROPOSED WATER LINE
- PROPOSED BORE WITH STEEL CASING
- PROPOSED WATER VALVE
- PROPOSED FIRE HYDRANT
- EXISTING WATER LINE
- EXISTING FIRE HYDRANT
- EXISTING WATER VALVE
- EXISTING SANITARY SEWER LINE
- EXSITING SANITARY SEWER MANHOLE
- EXISTING STORM SEWER LINE
- EXISTING STORM MANHOLE
- EXISTING OVERHEAD POWER LINE
- EXISTING POWER POLE
- EXSITING FENCE
- EXISTING TREE
- ABANDON EXISTING PIPING
- REMOVE EXISTING PIPING
- EXISTING AT&T FIBER
- EXISTING EXTENET COMM.
- EXISTING FIBERLIGHT COMM.
- EXISTING LOGIX COMM.
- EXISTING MCI COMM.
- EXISTING SPECTRUM COMM.
- EXISTING SPECTRUM FIBER.
- EXISTING LUMEN FIBER
- EXISTING GAS
- EXISTING ONCOR ELECTRIC
- EXISTING PRIVATE ELECTRIC
- TREE REMOVAL

WASTEWATER NOTES

1. LOCATION OF EXISTING LATERALS IS APPROXIMATE. CONTRACTOR SHALL TV INSPECT EXISTING LINE PRIOR TO CONSTRUCTION TO CONFIRM NUMBER AND LOCATION OF EXISTING LATERALS.
2. CONTRACTOR TO UTILIZE BYPASS PUMPING AS NEEDED TO MAINTAIN SERVICE AND KEEP FLOW CONTAINED THROUGHOUT THE DURATION OF THE PROJECT.
3. CONTRACTOR SHALL SURVEY ALL EXISTING FLOW LINES PRIOR TO CONSTRUCTION. CONTRACTOR SHALL NOTIFY ENGINEER IF DISCREPANCIES TO THESE PLANS EXIST.
4. CONTRACTOR IS RESPONSIBLE FOR GENERAL BYPASS PUMPING SEQUENCE NECESSARY TO INSTALL WASTEWATER LINE C AND THE RECONNECTIONS OF EXISTING LATERALS AND CONNECTIONS TO EXISTING MANHOLES.
5. ALL PROPOSED WASTEWATER SERVICE LATERALS SHALL BE SDR 26 PVC PRESSURE PIPE CONFORMING TO ASTM D2241.
6. CONTRACTOR SHALL INSTALL ALL WASTEWATER LATERALS AT A MINIMUM SLOPE OF 2.0%, UNLESS OTHERWISE NOTED, AND PROVIDE A MINIMUM OF 4 FEET OF COVER AT THE CLEANOUT LOCATED AT THE PROPERTY LINE. FLOWLINE ELEVATION OF THE PROPOSED LATERAL AT THE WASTEWATER MAIN CONNECTION SHALL BE AS SHOWN ON THE PLANS.

!!WARNING!!

EXISTING UTILITIES IN THE AREA. CONTRACTOR SHALL FIELD VERIFY THE LOCATION OF ALL EXISTING UTILITIES WITH THE PROVIDER PRIOR TO START OF CONSTRUCTION AND SHALL IMMEDIATELY NOTIFY THE ENGINEER OF ANY CONFLICTS DISCOVERED. CONTRACTOR IS RESPONSIBLE FOR COORDINATING UTILITY RELOCATION WHERE NECESSARY AND PROTECTING EXISTING UTILITIES (SHOWN OR NOT SHOWN). IF ANY EXISTING UTILITIES ARE DAMAGED, THE CONTRACTOR SHALL REPLACE THEM AT THEIR OWN EXPENSE.

811
Know what's **below.**
Call before you dig.

No.	REVISIONS	DATE	BY

PROJECT NO. C00057/ BID NO. 27-31

Kimley»Horn
225 E. JOHN W. CARPENTER FREEWAY SUITE 1100
IRVING, TX 75063
PHONE: 214.369.2100
WWW.KIMLEY-HORN.COM

© 2026 KIMLEY-HORN AND ASSOCIATES, INC.

TEXAS REGISTERED ENGINEERING FIRM #F-928

11/06/2026

STATE OF TEXAS
HANNAH G. WOOD
162206
LICENSED
PROFESSIONAL ENGINEER

KHA PROJECT	063543066
DATE	11/06/2026
SCALE	AS SHOWN
DESIGNED BY	HGW
DRAWN BY	CJS
CHECKED BY	LMW

ADDISON
ADDISON JUNCTION PUBLIC INFRASTRUCTURE IMPROVEMENTS

WASTEWATER LINE C
BEGIN TO END

SHEET NUMBER
88

Plotted By: Cjenkins, Inn, November 06, 2025 - 04:43:33pm C:\ACCAD\ACCDocs\Kimley-Horn\063543066-ADDISON JUNCTION PUBLIC\Project Files\CAD\PlanSheets\WASTEWATER - ACE ALLEY.dwg
This electronic data is provided with the understanding that it will be used solely for the specific purpose and client for which it was prepared. Reuse of and improper reliance on this document without written authorization and adaptation by Kimley-Horn and Associates, Inc. shall be without liability to Kimley-Horn and Associates, Inc.

Plotted By: Stephanie Lim November 06, 2025 04:24:47pm G:\ACCDocs\Vinyard Hon\06543066-ADDISON JUNCTION PUBLIC\Project Files\2400 Plan Sheets\WASTEWATER-ARAPAHO ROAD.dwg
This document, together with the concepts and designs presented herein, as an instrument of service, is intended only for the specific purpose and client for which it was prepared. Reuse of and improper reliance on this document without written authorization and adaptation by Kimley-Horn and Associates, Inc. shall be without liability to Kimley-Horn and Associates, Inc.

GRAPHIC SCALE IN FEET
0 10 20 40

NORTH

5035 ARAPAHO ROAD
TOWN OF ADDISON
VOLUME 93243, PAGE 6422
O.P.R.D.C.T.

STA: 4+23.56
INSTALL:
1 – 4' DIA. STD. WW MANHOLE
RIM EL = 623.01
N: 7036931.16
E: 2482413.93

PROP 8" WASTEWATER LINE D

STA: 3+05.47
INSTALL:
1 – 6' DIA. DROP WW MANHOLE
RIM EL = 620.77
N: 7036934.20
E: 2482531.98

STA: 3+05.33
INSTALL:
1 – ONE WAY CLEANOUT
1 – CAST IRON CLEANOUT
15 LF OF 8" WASTEWATER PIPE
SEE NOTE 9
FL (8") = 616.47'
N: 7036948.59
E: 2482531.76

PROP PAVING
(RE: PAVING SHEETS)

SPECTRUM DRIVE

STA: 1+33.62
INSTALL:
1 – ONE WAY CLEANOUT
1 – CAST IRON CLEANOUT
18 LF OF 8" WASTEWATER PIPE
SEE NOTE 9
FL (8") = 614.33'
N: 7036954.49
E: 2482706.13

MATCH LINE STA 5+00

6.8'

4+00

3+00

4.0'

2+00

1+00

ARAPAHO ROAD

PROP PAVING
(RE: PAVING SHEETS)

STA: 1+33.62
INSTALL:
1 – 6' DIA. DROP WW MANHOLE
RIM EL = 618.53
N: 7036937.09
E: 2482703.80

STA: 1+00.00
BEGIN PROP. 8" WASTEWATER LINE D
CONNECT TO EX. 4' DIA. WW MANHOLE
CONNECT TO EX. 12" WASTEWATER LINES (E,W)
RIM EL = 618.87
N: 7036903.46
E: 2482703.89

UTILITY LEGEND

- PROPOSED WASTEWATER LINE
- PROP. SANITARY SEWER MANHOLE
- PROPOSED WATER LINE
- PROPOSED BORE WITH STEEL CASING
- PROPOSED WATER VALVE
- PROPOSED FIRE HYDRANT
- EXISTING WATER LINE
- EXISTING FIRE HYDRANT
- EXISTING WATER VALVE
- EXISTING SANITARY SEWER LINE
- EXSITING SANITARY SEWER MANHOLE
- EXISTING STORM SEWER LINE
- EXISTING STORM MANHOLE
- EXISTING OVERHEAD POWER LINE
- EXISTING POWER POLE
- EXSITING FENCE
- EXISTING TREE
- ABANDON EXISTING PIPING
- REMOVE EXISTING PIPING
- EXISTING AT&T FIBER
- EXISTING EXTENET COMM.
- EXISTING FIBERLIGHT COMM.
- EXISTING LOGIX COMM.
- EXISTING MCI COMM.
- EXISTING SPECTRUM COMM.
- EXISTING SPECTRUM FIBER.
- EXISTING LUMEN FIBER
- EXISTING GAS
- EXISTING ONCOR ELECTRIC
- EXISTING PRIVATE ELECTRIC
- FUTURE ROADWAY SAWCUT
- TREE REMOVAL

WASTEWATER NOTES

1. LOCATION OF EXISTING LATERALS IS APPROXIMATE. CONTRACTOR SHALL TV INSPECT EXISTING LINE PRIOR TO CONSTRUCTION TO CONFIRM NUMBER AND LOCATION OF EXISTING LATERALS.
2. CONTRACTOR TO UTILIZE BYPASS PUMPING AS NEEDED TO MAINTAIN SERVICE AND KEEP FLOW CONTAINED THROUGHOUT THE DURATION OF THE PROJECT.
3. CONTRACTOR SHALL SURVEY ALL EXISTING FLOW LINES PRIOR TO CONSTRUCTION. CONTRACTOR SHALL NOTIFY ENGINEER IF DISCREPANCIES TO THESE PLANS EXIST.
4. CONTRACTOR IS RESPONSIBLE FOR GENERAL BYPASS PUMPING SEQUENCE NECESSARY TO INSTALL WASTEWATER LINE D AND THE RECONNECTIONS OF EXISTING LATERALS AND CONNECTIONS TO EXISTING MANHOLES.
5. ALL PROPOSED WASTEWATER SERVICE LATERALS SHALL BE SDR 26 PVC PRESSURE PIPE CONFORMING TO ASTM D2241.
6. DURING WASTEWATER CONSTRUCTION ALONG ARAPAHO ROAD, THE CONTRACTOR SHALL NOT CLOSE MORE THAN ONE LANE AT ANY TIME. ALL REMAINING LANES SHALL BE MAINTAINED OPEN TO TRAFFIC UNLESS OTHERWISE APPROVED BY THE TOWN.
7. DURING WASTEWATER CONSTRUCTION CROSSING SPECTRUM DRIVE AND QUORUM DRIVE, THE CONTRACTOR SHALL NOT CLOSE MORE THAN ONE–HALF OF THE ROADWAY AT ANY TIME. THE CROSSING SHALL BE CONSTRUCTED IN PHASES AS NECESSARY TO MAINTAIN TRAFFIC THROUGH THE INTERSECTION/ROADWAY UNLESS OTHERWISE APPROVED BY THE TOWN.
8. CONTRACTOR SHALL BRACE AND SUPPORT THE EXISTING 39–INCH STORM PIPE AS REQUIRED DURING WASTEWATER INSTALLATION. ALL LABOR, MATERIALS, AND EQUIPMENT REQUIRED FOR BRACING AND SUPPORT SHALL BE SUBSIDIARY TO THE WASTEWATER INSTALLATION.
9. CONTRACTOR SHALL INSTALL ALL WASTEWATER LATERALS AT A MINIMUM SLOPE OF 2.0%, UNLESS OTHERWISE NOTED, AND PROVIDE A MINIMUM OF 4 FEET OF COVER AT THE CLEANOUT LOCATED AT THE PROPERTY LINE. FLOWLINE ELEVATION OF THE PROPOSED LATERAL AT THE WASTEWATER MAIN CONNECTION SHALL BE AS SHOWN ON THE PLANS.

8" WASTEWATER LINE D

SCALE: 1" = 20' HORIZONTAL
1" = 4' VERTICAL

STA: 4+23.56
INSTALL:
1 – 4' DIA. STD. WW MANHOLE
RIM: 623.01

STA: 3+05.47
INSTALL:
1 – 6' DIA. DROP WW MANHOLE
RIM: 620.77

STA: 1+33.62
INSTALL:
1 – 6' DIA. DROP WW MANHOLE
RIM: 618.53

STA: 1+00
BEGIN PROP. 8" WASTEWATER LINE D
CONNECT TO EX. 4' DIA. WW MANHOLE
CONNECT TO EX. 12" WASTEWATER LINES (E,W)
RIM: 618.87

630
625
620
615
610
605
600
595

MATCH LINE STA 5+00

EX. GROUND AT ℄ OF PIPE

EX. GAS
ELEVATION: UNKNOWN
EX. FOC
ELEVATION: UNKNOWN

EX. 39" STORM
FL:612.3

EX. 39" STORM
FL:612.3

2.0'

2.0'

8" PVC @ 1.50%

8" PVC @ 1.50%

8" PVC @ 0.34%

8" PVC @ 0.85%

400 LF 8" PVC ASTM D3034 (SDR–26)
BY OPEN CUT CLASS B–2 – WW EMBEDMENT

8" FL IN: 611.64 (W)
8" FL OUT: 611.54 (E)

8" FL IN: 609.77 (W)
8" FL IN: 616.03 (N)
8" FL OUT: 609.67 (E)

8" FL IN: 609.09 (W)
8" FL IN: 613.80 (N)
8" FL OUT: 608.99 (S)

8" FL IN: 608.70 (N)
12" FL IN: 609.20 (SW)
12" FL OUT: 608.60 (E)

5+00 4+00 3+00 2+00 1+00

!!WARNING!!

EXISTING UTILITIES IN THE AREA. CONTRACTOR SHALL FIELD VERIFY THE LOCATION OF ALL EXISTING UTILITIES WITH THE PROVIDER PRIOR TO START OF CONSTRUCTION AND SHALL IMMEDIATELY NOTIFY THE ENGINEER OF ANY CONFLICTS DISCOVERED. CONTRACTOR IS RESPONSIBLE FOR COORDINATING UTILITY RELOCATION WHERE NECESSARY AND PROTECTING EXISTING UTILITIES (SHOWN OR NOT SHOWN). IF ANY EXISTING UTILITIES ARE DAMAGED, THE CONTRACTOR SHALL REPLACE THEM AT THEIR OWN EXPENSE.

811
Know what's **below.**
Call before you dig.

No.	REVISIONS	DATE	BY

PROJECT NO. C00057/ BID NO. 27–31

Kimley»Horn
225 E. JOHN W. CARPENTER FREEWAY SUITE 1100
IRVING, TX 75063
PHONE: 214-369-2100
WWW.KIMLEY-HORN.COM
© 2026 KIMLEY-HORN AND ASSOCIATES, INC.
TEXAS REGISTERED ENGINEERING FIRM #F-928

11/06/2026

STATE OF TEXAS
HANNAH G. WOOD
162206
LICENSED
PROFESSIONAL ENGINEER

KHA PROJECT 063543066
DATE 11/06/2026
SCALE AS SHOWN
DESIGNED BY HGW
DRAWN BY CIS
CHECKED BY LMW

ADDISON
ADDISON JUNCTION PUBLIC INFRASTRUCTURE IMPROVEMENTS

WASTEWATER LINE D
BEGIN TO 5+00

SHEET NUMBER
89

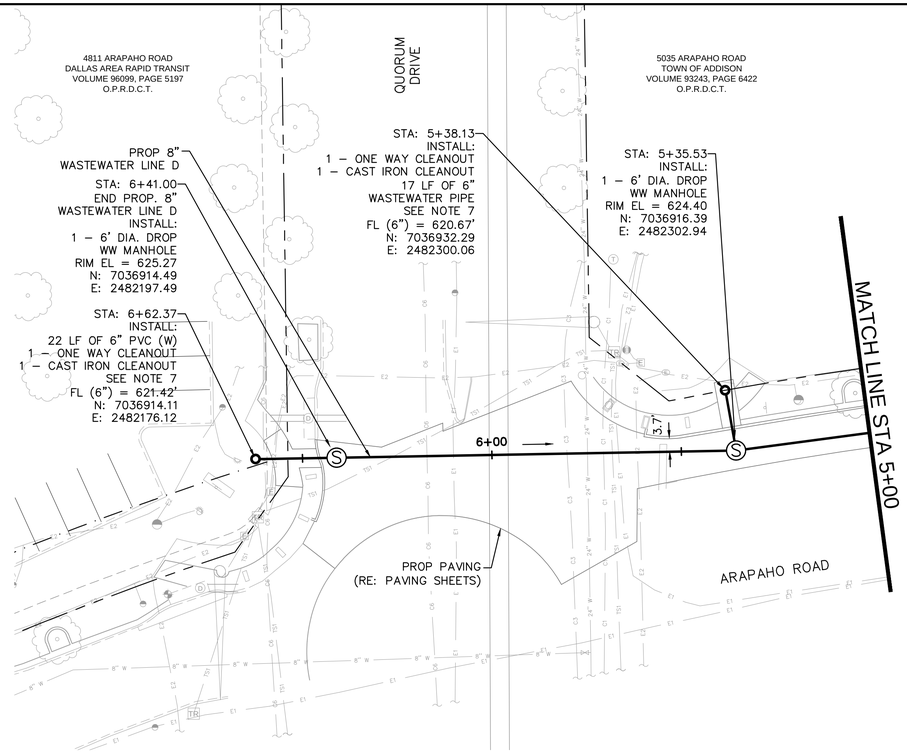

8" WASTEWATER LINE D

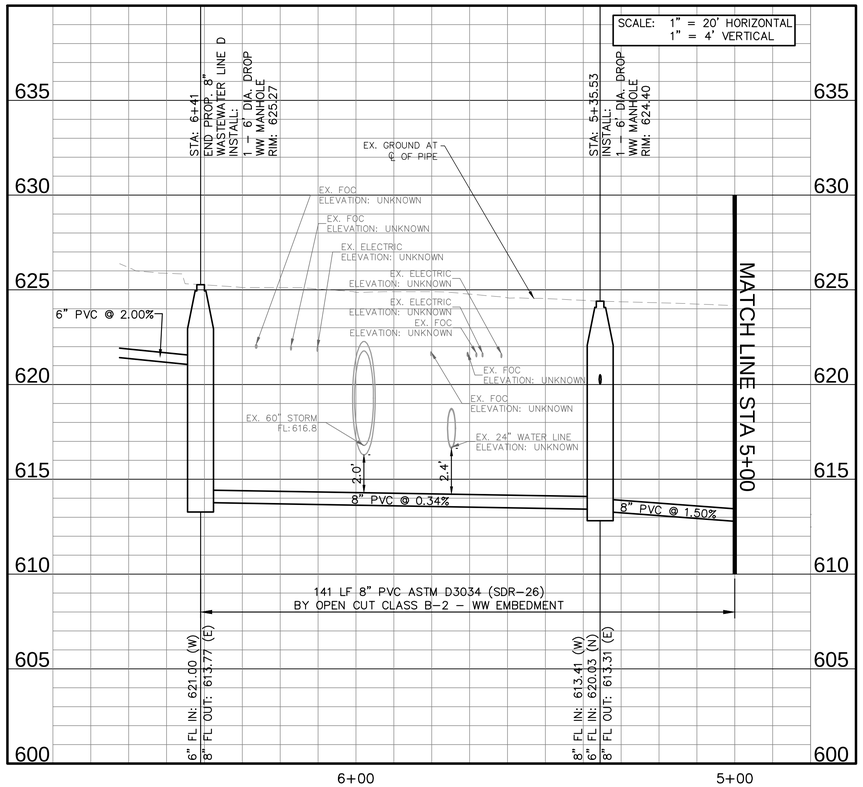

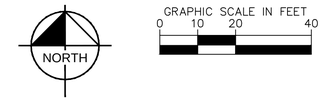

UTILITY LEGEND

- PROPOSED WASTEWATER LINE
- PROP. SANITARY SEWER MANHOLE
- PROPOSED WATER LINE
- PROPOSED BORE WITH STEEL CASING
- PROPOSED WATER VALVE
- PROPOSED FIRE HYDRANT
- EXISTING WATER LINE
- EXISTING FIRE HYDRANT
- EXISTING WATER VALVE
- EXISTING SANITARY SEWER LINE
- EXSITING SANITARY SEWER MANHOLE
- EXISTING STORM SEWER LINE
- EXISTING STORM MANHOLE
- EXISTING OVERHEAD POWER LINE
- EXISTING POWER POLE
- EXSITING FENCE
- EXISTING TREE
- ABANDON EXISTING PIPING
- REMOVE EXISTING PIPING
- EXISTING AT&T FIBER
- EXISTING EXTENET COMM.
- EXISTING FIBERLIGHT COMM.
- EXISTING LOGIX COMM.
- EXISTING MCI COMM.
- EXISTING SPECTRUM COMM.
- EXISTING SPECTRUM FIBER.
- EXISTING LUMEN FIBER
- EXISTING GAS
- EXISTING ONCOR ELECTRIC
- EXISTING PRIVATE ELECTRIC
- TREE REMOVAL

WASTEWATER NOTES

1. LOCATION OF EXISTING LATERALS IS APPROXIMATE. CONTRACTOR SHALL TV INSPECT EXISTING LINE PRIOR TO CONSTRUCTION TO CONFIRM NUMBER AND LOCATION OF EXISTING LATERALS.
2. CONTRACTOR TO UTILIZE BYPASS PUMPING AS NEEDED TO MAINTAIN SERVICE AND KEEP FLOW CONTAINED THROUGHOUT THE DURATION OF THE PROJECT.
3. CONTRACTOR SHALL SURVEY ALL EXISTING FLOW LINES PRIOR TO CONSTRUCTION. CONTRACTOR SHALL NOTIFY ENGINEER IF DISCREPANCIES TO THESE PLANS EXIST.
4. CONTRACTOR IS RESPONSIBLE FOR GENERAL BYPASS PUMPING SEQUENCE NECESSARY TO INSTALL WASTEWATER LINE D AND THE RECONNECTIONS OF EXISTING LATERALS AND CONNECTIONS TO EXISTING MANHOLES.
5. ALL PROPOSED WASTEWATER SERVICE LATERALS SHALL BE SDR 26 PVC PRESSURE PIPE CONFORMING TO ASTM D2241.
6. CONTRACTOR SHALL BRACE AND SUPPORT THE EXISTING 60–INCH STORM PIPE AS REQUIRED DURING WASTEWATER INSTALLATION. ALL LABOR, MATERIALS, AND EQUIPMENT REQUIRED FOR BRACING AND SUPPORT SHALL BE SUBSIDIARY TO THE WASTEWATER INSTALLATION.
7. CONTRACTOR SHALL INSTALL ALL WASTEWATER LATERALS AT A MINIMUM SLOPE OF 2.0%, UNLESS OTHERWISE NOTED, AND PROVIDE A MINIMUM OF 4 FEET OF COVER AT THE CLEANOUT LOCATED AT THE PROPERTY LINE. FLOWLINE ELEVATION OF THE PROPOSED LATERAL AT THE WASTEWATER MAIN CONNECTION SHALL BE AS SHOWN ON THE PLANS.

!!WARNING!!

EXISTING UTILITIES IN THE AREA. CONTRACTOR SHALL FIELD VERIFY THE LOCATION OF ALL EXISTING UTILITIES WITH THE PROVIDER PRIOR TO START OF CONSTRUCTION AND SHALL IMMEDIATELY NOTIFY THE ENGINEER OF ANY CONFLICTS DISCOVERED. CONTRACTOR IS RESPONSIBLE FOR COORDINATING UTILITY RELOCATION WHERE NECESSARY AND PROTECTING EXISTING UTILITIES (SHOWN OR NOT SHOWN). IF ANY EXISTING UTILITIES ARE DAMAGED, THE CONTRACTOR SHALL REPLACE THEM AT THEIR OWN EXPENSE.

811 Know what's **below.** **Call** before you dig.

No.	REVISIONS	DATE	BY

PROJECT NO. C00057/ BID NO. 27-31

Kimley»Horn
225 E. JOHN W. CARPENTER FREEWAY SUITE 1100
IRVING, TX 75062
PHONE: 214.565.0500
WWW.KIMLEY-HORN.COM
© 2026 KIMLEY-HORN AND ASSOCIATES, INC.
TEXAS REGISTERED ENGINEERING FIRM #F-928

11/06/2026



KHA PROJECT	063543066
DATE	11/06/2026
SCALE	AS SHOWN
DESIGNED BY	HGW
DRAWN BY	CJS
CHECKED BY	LMW

ADDISON
ADDISON JUNCTION PUBLIC INFRASTRUCTURE IMPROVEMENTS

WASTEWATER LINE D
STA 5+00 TO END

SHEET NUMBER
90

Plotted By: Chris Stephens Jan, November 06, 2025 - 04:24:43pm G:\ACCD\Addison\Project Files\2400\Project Files\2400\Project Files\2400

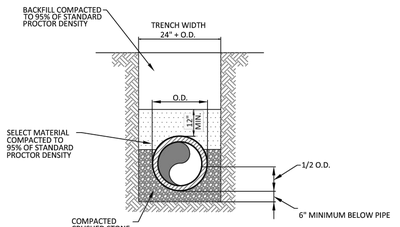

TYPICAL P.V.C. WASTEWATER MAIN EMBEDMENT

N.T.S.

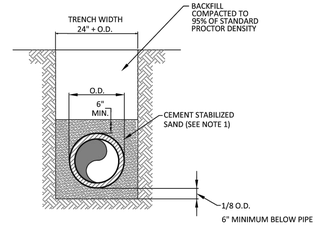

P.V.C. WASTEWATER MAIN CEMENT STABILIZED SAND EMBEDMENT

N.T.S.

NOTES:
1. CEMENT STABILIZED SAND IS REQUIRED FOR PRESSURE RATED WASTEWATER MAIN AND LATERAL BEDDING. CEMENT STABILIZED SAND SHALL HAVE A MINIMUM OF 10% CEMENT PER CUBIC YARD OF CEMENT STABILIZED SAND MIXTURE , BASED ON LOOSE DRY WEIGHT VOLUME (AT LEAST 2.5 BAGS OF CEMENT PER CUBIC YARD OF MIXTURE). THE USE OF BROWN COLORING IN CEMENT STABILIZED SAND IS REQUIRED FOR PRESSURE RATED WASTEWATER MAIN AND LATERAL BEDDING.

ADDISON PUBLIC WORKS & ENGINEERING SERVICES | P.V.C. WASTEWATER MAIN EMBEDMENT | STANDARD CONSTRUCTION DETAILS WASTEWATER | DATE: JANUARY 2022 | REV DATE: - | SHEET: SD-WW01

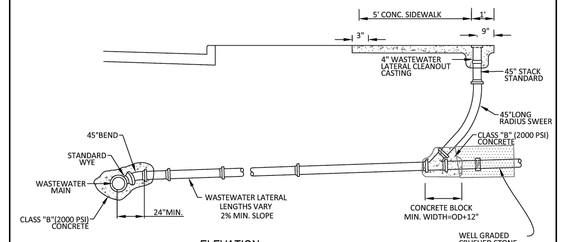

ELEVATION

N.T.S.

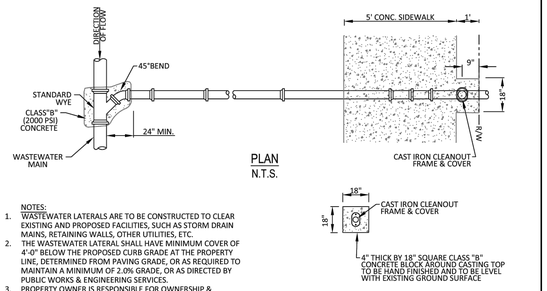

PLAN

N.T.S.

NOTES:
1. WASTEWATER LATERALS ARE TO BE CONSTRUCTED TO CLEAR EXISTING AND PROPOSED FACILITIES, SUCH AS STORM DRAIN MAINS, RETAINING WALLS, OTHER UTILITIES, ETC.
2. THE WASTEWATER LATERAL SHALL HAVE MINIMUM COVER OF 4'-0" BELOW THE PROPOSED CURB GRADE AT THE PROPERTY LINE, DETERMINED FROM PAVING GRADE, OR AS REQUIRED TO MAINTAIN A MINIMUM OF 2.0% GRADE, OR AS DIRECTED BY PUBLIC WORKS & ENGINEERING SERVICES.
3. PROPERTY OWNER IS RESPONSIBLE FOR OWNERSHIP & MAINTENANCE OF THE SEWER SERVICE LATERAL.

ADDISON PUBLIC WORKS & ENGINEERING SERVICES | CLEANOUT NEW CONSTRUCTION | STANDARD CONSTRUCTION DETAILS WASTEWATER | DATE: JANUARY 2022 | REV DATE: - | SHEET: SD-WW02

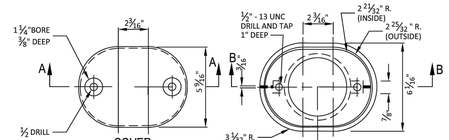

COVER

N.T.S.

CLEANOUT FRAME TOP

N.T.S.

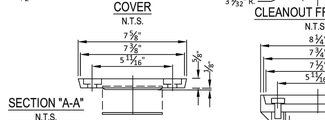

SECTION "A-A"

N.T.S.

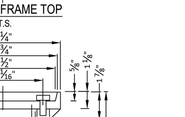

SECTION "B-B"

N.T.S.

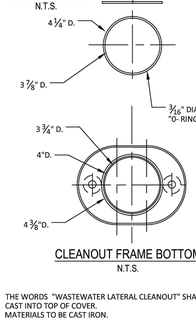

CLEANOUT FRAME BOTTOM

N.T.S.

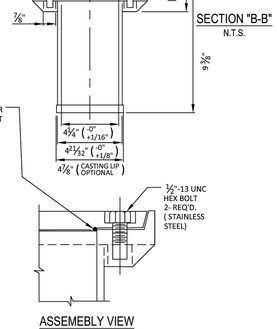

ASSEMEBLY VIEW

N.T.S.

1. THE WORDS "WASTEWATER LATERAL CLEANOUT" SHALL BE CAST INTO TOP OF COVER.
2. MATERIALS TO BE CAST IRON.

ADDISON PUBLIC WORKS & ENGINEERING SERVICES | CAST IRON CLEANOUT FRAME & COVER IN PAVEMENT APPLICATION | STANDARD CONSTRUCTION DETAILS WASTEWATER | DATE: JANUARY 2022 | REV DATE: - | SHEET: SD-WW03

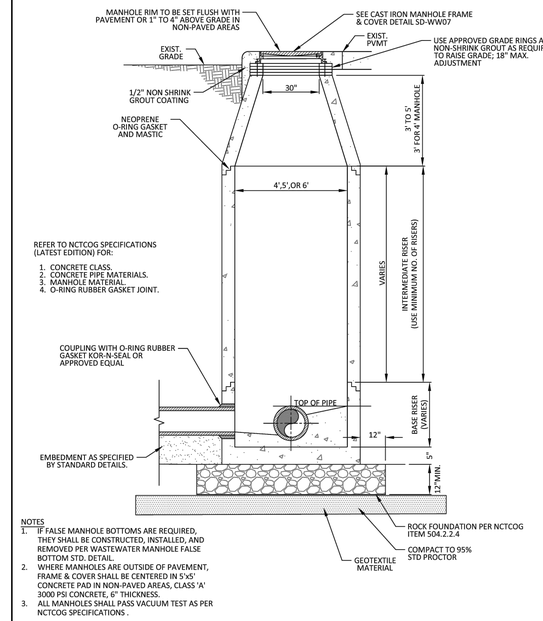

NOTES
1. IF FALSE MANHOLE BOTTOMS ARE REQUIRED, THEY SHALL BE CONSTRUCTED, INSTALLED, AND REMOVED PER WASTEWATER MANHOLE FALSE BOTTOM STD. DETAIL.
2. WHERE MANHOLES ARE OUTSIDE OF PAVEMENT, FRAME & COVER SHALL BE CENTERED IN 5'x5' CONCRETE PAD IN NON-PAVED AREAS, CLASS 'A' 3000 PSI CONCRETE, 6" THICKNESS.
3. ALL MANHOLES SHALL PASS VACUUM TEST AS PER NCTCOG SPECIFICATIONS .

ADDISON PUBLIC WORKS & ENGINEERING SERVICES | PRECAST CONCRETE PIPE MANHOLE | STANDARD CONSTRUCTION DETAILS WASTEWATER | DATE: JANUARY 2022 | REV DATE: - | SHEET: SD-WW04

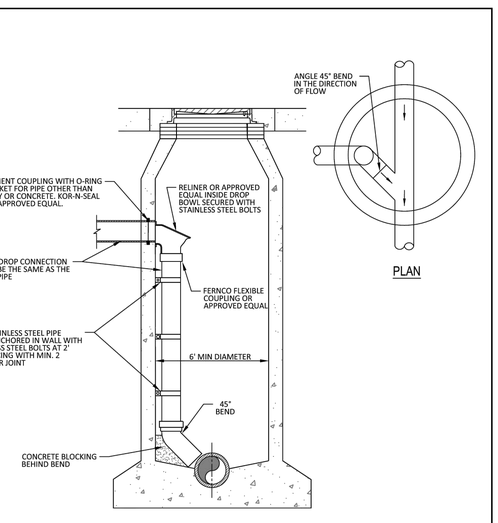

INTERIOR DROP MANHOLE CONNECTION

N.T.S.

ADDISON PUBLIC WORKS & ENGINEERING SERVICES | INTERIOR DROP MANHOLE CONNECTION | STANDARD CONSTRUCTION DETAILS WASTEWATER | DATE: JANUARY 2022 | REV DATE: - | SHEET: SD-WW05

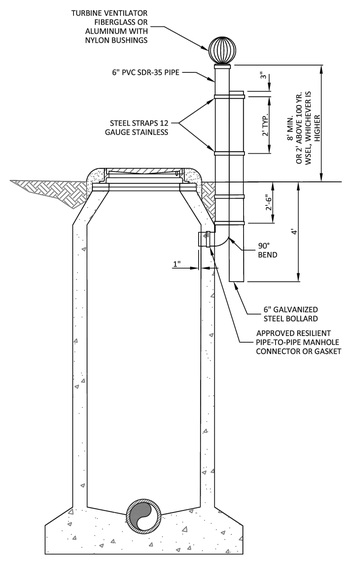

ADDISON PUBLIC WORKS & ENGINEERING SERVICES | VENTED MANHOLE | STANDARD CONSTRUCTION DETAILS WASTEWATER | DATE: JANUARY 2022 | REV DATE: - | SHEET: SD-WW06

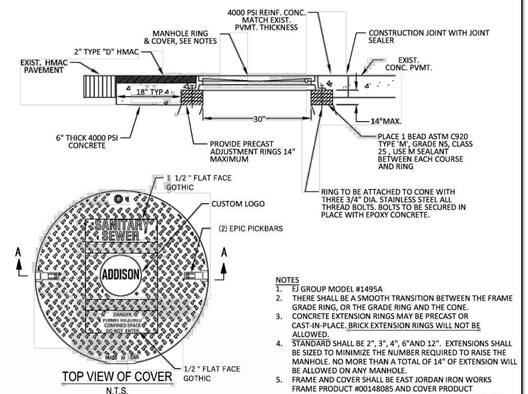

TOP VIEW OF COVER

N.T.S.

NOTES
1. EJ GROUP MODEL #1495A
2. THERE SHALL BE A SMOOTH TRANSITION BETWEEN THE FRAME GRADE RING, OR THE GRADE RING AND THE CONE.
3. CONCRETE EXTENSION RINGS MAY BE PRECAST OR CAST-IN-PLACE. BRICK EXTENSION RINGS WILL NOT BE ALLOWED.
4. STANDARD SHALL BE 2", 3", 4", 6"AND 12". EXTENSIONS SHALL BE SIZED TO MINIMIZE THE NUMBER REQUIRED TO RAISE THE MANHOLE. NO MORE THAN A TOTAL OF 14" OF EXTENSION WILL BE ALLOWED ON ANY MANHOLE.
5. FRAME AND COVER SHALL BE EAST JORDAN IRON WORKS FRAME PRODUCT #00148085 AND COVER PRODUCT #001495009 OR APPROVED EQUAL AND SHALL BE GRAY CAST IRON CONFORMING TO ASTM A48-CL35B.

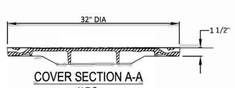

COVER SECTION A-A

N.T.S.

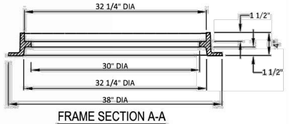

FRAME SECTION A-A

N.T.S.

ADDISON PUBLIC WORKS & ENGINEERING SERVICES | CAST IRON MANHOLE FRAME & COVER | STANDARD CONSTRUCTION DETAILS WASTEWATER | DATE: SEPTEMBER 2023 | REV DATE: OCTOBER 2024 | SHEET: SD-WW07

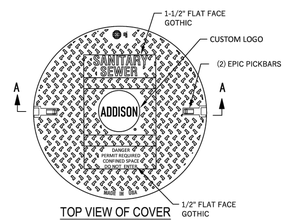

TOP VIEW OF COVER

N.T.S.

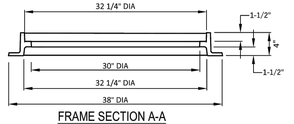

FRAME SECTION A-A

N.T.S.

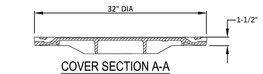

COVER SECTION A-A

N.T.S.

ADDISON PUBLIC WORKS & ENGINEERING SERVICES | PRESSURE TYPE MANHOLE FRAME & COVER | STANDARD CONSTRUCTION DETAILS WASTEWATER | DATE: JANUARY 2022 | REV DATE: - | SHEET: SD-WW08

No.	REVISIONS	DATE	BY

PROJECT NO. C00057/ BID NO. 27-31

Kimley»Horn

225 E.JOHN W. CARPENTER FREEWAY SUITE 1100
IRVING, TX 75063
PHONE: 214-420-5600
WWW.KIMLEY-HORN.COM

© 2026 KIMLEY-HORN AND ASSOCIATES, INC.
TEXAS REGISTERED ENGINEERING FIRM #F-928

11/06/2026

STATE OF TEXAS
HANNAH G. WOOD
162206
LICENSED PROFESSIONAL ENGINEER

KHA PROJECT 063543066 | DATE 11/06/2026 | SCALE AS SHOWN | DESIGNED BY HGW | DRAWN BY CIS | CHECKED BY LMW

ADDISON
ADDISON JUNCTION PUBLIC INFRASTRUCTURE IMPROVEMENTS

WASTEWATER STANDARD DETAILS
(SHEET 1 OF 2)

SHEET NUMBER
91

Plotted By: Stephens, Ian November 06, 2026 04:24:55pm C:\ACC\ACCDocs\Kimley-Horn\063543066-ADDISON JUNCTION PUBLIC\Project Files\CADD\PlanSheets\WATER - CITY DETAILS.dwg
This document, together with the concepts and designs presented herein, as an instrument of service, is intended only for the specific purpose and client for which it was prepared. Reuse of and improper reliance on this document without written authorization and adaptation by Kimley-Horn and Associates, Inc. shall be without liability to Kimley-Horn and Associates, Inc.

ADDISON PUBLIC WORKS & ENGINEERING SERVICES	WASTEWATER MANHOLE LINE INTERSECTION & 'C-T' PIPE ADAPTER	STANDARD CONSTRUCTION DETAILS WASTEWATER		
		DATE: JANUARY 2022	REV DATE: -	SHEET: SD-WW09

ADDISON PUBLIC WORKS & ENGINEERING SERVICES	ABANDONMENT OF MANHOLE	STANDARD CONSTRUCTION DETAILS WASTEWATER		
		DATE: JANUARY 2022	REV DATE: -	SHEET: SD-WW10

CARRIER PIPE SIZE (IN)	STEEL ENCASEMENT O.D. (IN)	STEEL ENCASEMENT WALL THICKNESS (IN)
6	14	1/4
8	18	1/4
12	21	1/4
18	27	3/8
21	30	3/8
24	36	3/8
27	39	1/2

FOR ALL CARRIER PIPES OVER 27": THE STEEL ENCASEMENT SHALL BE 12" LARGER THAN THE CARRIER PIPE AND THE STEEL ENCASEMENT WALL THICKNESS SHALL BE ½".

NOTES:
1. HIGH DENSITY POLYETHYLENE SPACERS, RACI OR EQUAL, SHALL BE USED. WHERE NO CASING PIPE IS REQUIRED OVERCUTTING AROUND UTILITY SHALL BE FILLED WITH HYDRAULICALLY PLACED NON-SHRINK GROUT AS PER ASTM C476.
2. ENCASEMENT PIPE SHALL BE HIGH DENSITY STEEL PIPE. ALL JOINTS TO BE WELDED 100%.

ADDISON PUBLIC WORKS & ENGINEERING SERVICES	CASING	STANDARD CONSTRUCTION DETAILS WASTEWATER		
		DATE: JANUARY 2022	REV DATE:	SHEET: SD-WW11

NOTES:
1. Bc = OUTSIDE DIAMETER OF PIPE
2. Bd = INSIDE DIAMETER OF PIPE
3. D = INSIDE DIAMETER OF PIPE
4. USE 95% DENSITY UNDER PAVED AREAS AND 90% IN UNPAVED AREAS

EMBEDMENT
CLASS "D+" & "G"

STANDARD SPECIFICATION REFERENCE 504.5
STANDARD DRAWING NO. 3050
DATE AUG '23
North Central Texas Council of Governments

STANDARD DRAWING NO. 3050

No.	REVISIONS	DATE	BY

PROJECT NO. C00057/ BID NO. 27-31

Kimley»Horn
225 E. JOHN W. CARPENTER FREEWAY SUITE 1100
IRVING, TX 75063
PHONE: 214-420-5600
WWW.KIMLEY-HORN.COM
© 2026 KIMLEY-HORN AND ASSOCIATES, INC.
TEXAS REGISTERED ENGINEERING FIRM #F-928

11/06/2026

STATE OF TEXAS
HANNAH G. WOOD
162206
LICENSED PROFESSIONAL ENGINEER

KHA PROJECT	063543066
DATE	11/06/2026
SCALE	AS SHOWN
DESIGNED BY	HGW
DRAWN BY	CIS
CHECKED BY	LMW

ADDISON
ADDISON JUNCTION PUBLIC INFRASTRUCTURE IMPROVEMENTS

WASTEWATER STANDARD DETAILS
(SHEET 2 OF 2)

SHEET NUMBER
92

Plotted By: Stephens, Ian November 06, 2026 04:24:55pm C:\ACC\ACCDocs\Kimley-Horn\063543066-ADDISON JUNCTION PUBLIC\Project Files\CADD\PlanSheets\WATER - CITY DETAILS.dwg
This document, together with the concepts and designs presented herein, as an instrument of service, is intended only for the specific purpose and client for which it was prepared. Reuse of and improper reliance on this document without written authorization and adaptation by Kimley-Horn and Associates, Inc. shall be without liability to Kimley-Horn and Associates, Inc.

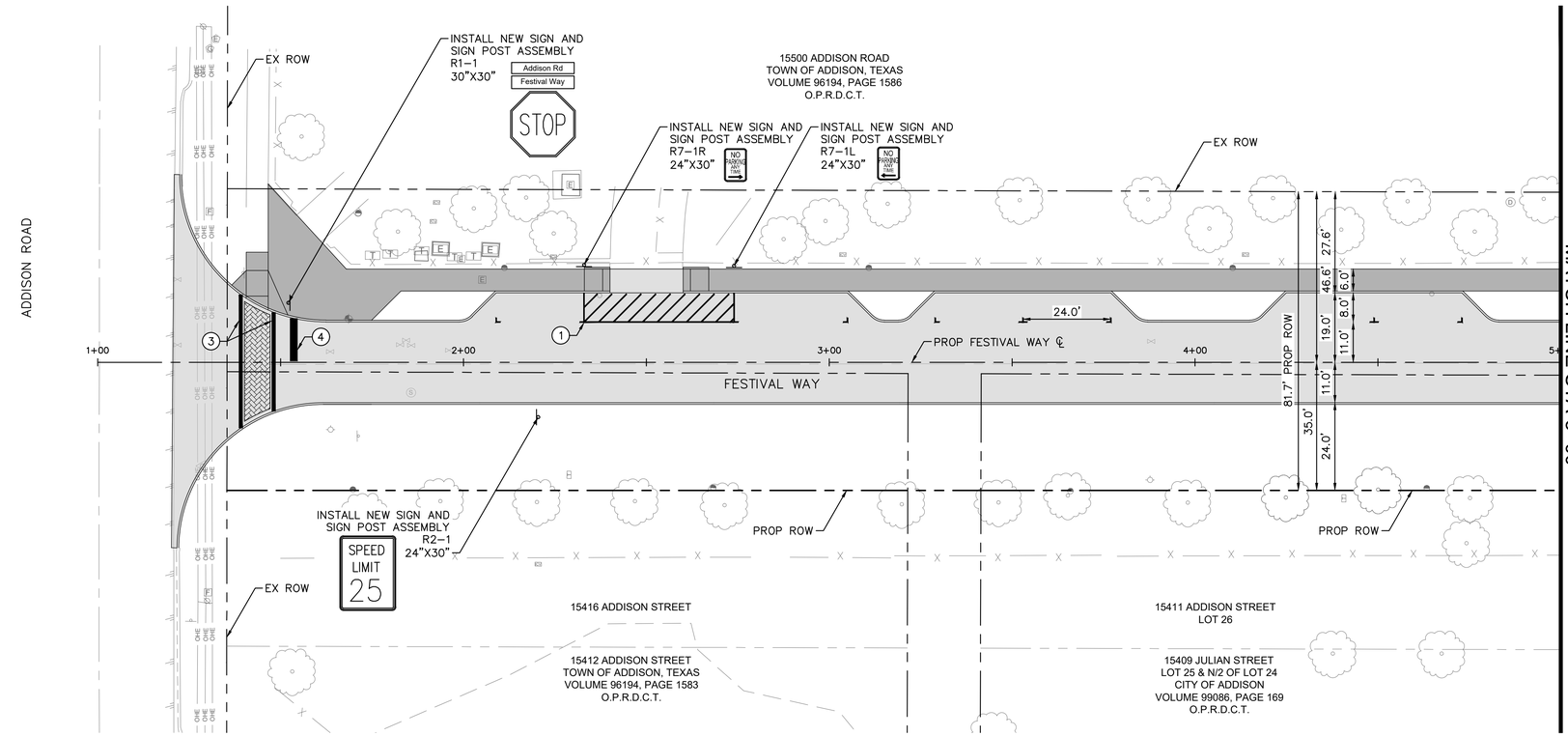

NORTH

GRAPHIC SCALE IN FEET
0 10 20 40

STRIPING LEGEND

1	INSTALL 4" SOLID WHITE LINE
2	INSTALL 8" SOLID WHITE LINE
3	INSTALL 12" SOLID WHITE LINE
4	INSTALL 24" SOLID WHITE LINE
5	INSTALL TYPE II-C-R RAISED PAVEMENT MARKER
6	INSTALL TYPE I-C-R RAISED PAVEMENT MARKER

NOTES

1. CONTRACTOR IS RESPONSIBLE FOR RELOCATION OF ANY SIGNS AND COORDINATION WITH THE CITY ON ANY NECESSARY MODIFICATIONS.
2. ALL EXISTING PAVEMENT MARKINGS IN CONFLICT WITH PROPOSED PAVEMENT MARKING SHALL BE REMOVED (NO SEPARATE PAY).

NORTH

Know what's **below.**
Call before you dig.

No.	REVISIONS	DATE	BY

PROJECT NO. C00057/ BID NO. 27-31

Kimley»Horn
225 E. JOHN W. CARPENTER FREEWAY SUITE 1100
IRVING, TX 75062
PHONE: 214-369-1600
WWW.KIMLEY-HORN.COM
© 2026 KIMLEY-HORN AND ASSOCIATES, INC.
TEXAS REGISTERED ENGINEERING FIRM #F-928

11/06/2026
STATE OF TEXAS
L. NATHAN ANTE
96866
REGISTERED
PROFESSIONAL ENGINEER
L. Nathan Ante

KHA PROJECT 063543066	DATE 11/06/2026	DESIGNED BY	KCH
	SCALE AS SHOWN	DRAWN BY	ZMZ
		CHECKED BY	FLS

ADDISON
ADDISON JUNCTION PUBLIC INFRASTRUCTURE IMPROVEMENTS

PAVEMENT MARKING AND SIGNING FESTIVAL WAY
BEGIN TO STA 9+00

SHEET NUMBER
93

Plotted By: Morrow, Jeremy November 06, 2026 - 01:35:52pm G:\ACD\ACDProj\Ante,Nathan\063543066-ADDISON_JUNCTION PUBLIC\Project Files\CADD\Plan Sheets\PAVEMENT MARKING - FESTIVAL WAY.dgn
This document, together with the concepts and designs presented herein, as an instrument of service, is intended only for the specific purpose and client for which it was prepared. Reuse of and improper reliance on this document without written authorization and adaptation by Kimley-Horn and Associates, Inc. shall be without liability to Kimley-Horn and Associates, Inc.

Plotted By: Morrow, Joseph November 06, 2026 01:35:55pm C:\ACTIVE\ACDocs\Vantage Intern\063543066-ADDISON JUNCTION PUBLIC\Project Files\CAD\Plan Sheet\PAVEMENT MARKING - FESTIVAL WAY.dgn
This document, together with the concepts and designs presented herein, as an instrument of service, is intended only for the specific purpose and client for which it was prepared. Reuse of and improper reliance on this document without written authorization and adaptation by Kimley-Horn and Associates, Inc. shall be without liability to Kimley-Horn and Associates, Inc.

MATCH LINE STA 9+00

15600 QUORUM DRIVE
TOWN OF ADDISON
VOLUME 97217, PAGE 3056
O.P.R.D.C.T.

PROP ROW

INSTALL NEW SIGN AND SIGN POST ASSEMBLY R2-1 24"X30"

SPEED LIMIT 25

16.0'
6.0'
8.0'
11.0'
19.0'
35.0'
24.0'
11.0'
11.0'
70.0' PROP ROW
35.0'
24.0'

10+00
11+00
12+00
12+90

PROP FESTIVAL WAY ℄

FESTIVAL WAY

QUORUM DRIVE

PROP ROW

INSTALL NEW SIGN AND SIGN POST ASSEMBLY R1-1 30"X30"
Quorum Dr
Festival Way
STOP

15600 QUORUM DRIVE
TOWN OF ADDISON
VOLUME 97217, PAGE 3056
O.P.R.D.C.T.

NORTH

GRAPHIC SCALE IN FEET
0 10 20 40

STRIPING LEGEND

1	INSTALL 4" SOLID WHITE LINE
2	INSTALL 8" SOLID WHITE LINE
3	INSTALL 12" SOLID WHITE LINE
4	INSTALL 24" SOLID WHITE LINE
5	INSTALL TYPE II-C-R RAISED PAVEMENT MARKER
6	INSTALL TYPE I-C-R RAISED PAVEMENT MARKER

NOTES

1. CONTRACTOR IS RESPONSIBLE FOR RELOCATION OF ANY SIGNS AND COORDINATION WITH THE CITY ON ANY NECESSARY MODIFICATIONS.
2. ALL EXISTING PAVEMENT MARKINGS IN CONFLICT WITH PROPOSED PAVEMENT MARKING SHALL BE REMOVED (NO SEPARATE PAY).

15408 ADDISON STREET
15407 JULIAN ST
15406 ADDISON STREET
15405 JULIAN ST
15404 ADDISON STREET

INSTALL NEW SIGN AND SIGN POST ASSEMBLY R1-1 30"X30"
Addison Rd
Ace Alley
STOP

ADDISON ROAD

PROP ROW
EX ROW

ACE ALLEY
PROP ACE ALLEY ℄

300+00
301+00
302+00
303+00
304+00
304+50

35.0' PROP ROW
21.0'
8.5'
12.0'
14.0'
12.0'
2.0'

JULIAN AVENUE
104+00
103+00

4803 BROADWAY STREET
4811 BROADWAY STREET
4813 BROADWAY STREET
4815 BROADWAY STREET
4819 BROADWAY STREET
4821 BROADWAY STREET
4823 BROADWAY STREET
4831 BROADWAY STREET

NORTH

811 Know what's below. Call before you dig.

No.	REVISIONS	DATE	BY

PROJECT NO. C000057/ BID NO. 27-31

Kimley»Horn
225 E. JOHN W. CARPENTER FREEWAY SUITE 1100
IRVING, TX 75062
PHONE: 214-369-2300
WWW.KIMLEY-HORN.COM
© 2026 KIMLEY-HORN AND ASSOCIATES, INC.
TEXAS REGISTERED ENGINEERING FIRM #F-928

11/06/2026
STATE OF TEXAS
L. NATHAN ANTE
96866
LICENSED PROFESSIONAL ENGINEER
L. Nathan Ante

KHA PROJECT 063543066
DATE 11/06/2026
SCALE AS SHOWN
DESIGNED BY KCH
DRAWN BY ZMZ
CHECKED BY FLS

ADDISON
ADDISON JUNCTION PUBLIC INFRASTRUCTURE IMPROVEMENTS

PAVEMENT MARKING AND SIGNING FESTIVAL WAY
STA 9+00 TO END
ACE ALLEY

SHEET NUMBER
94

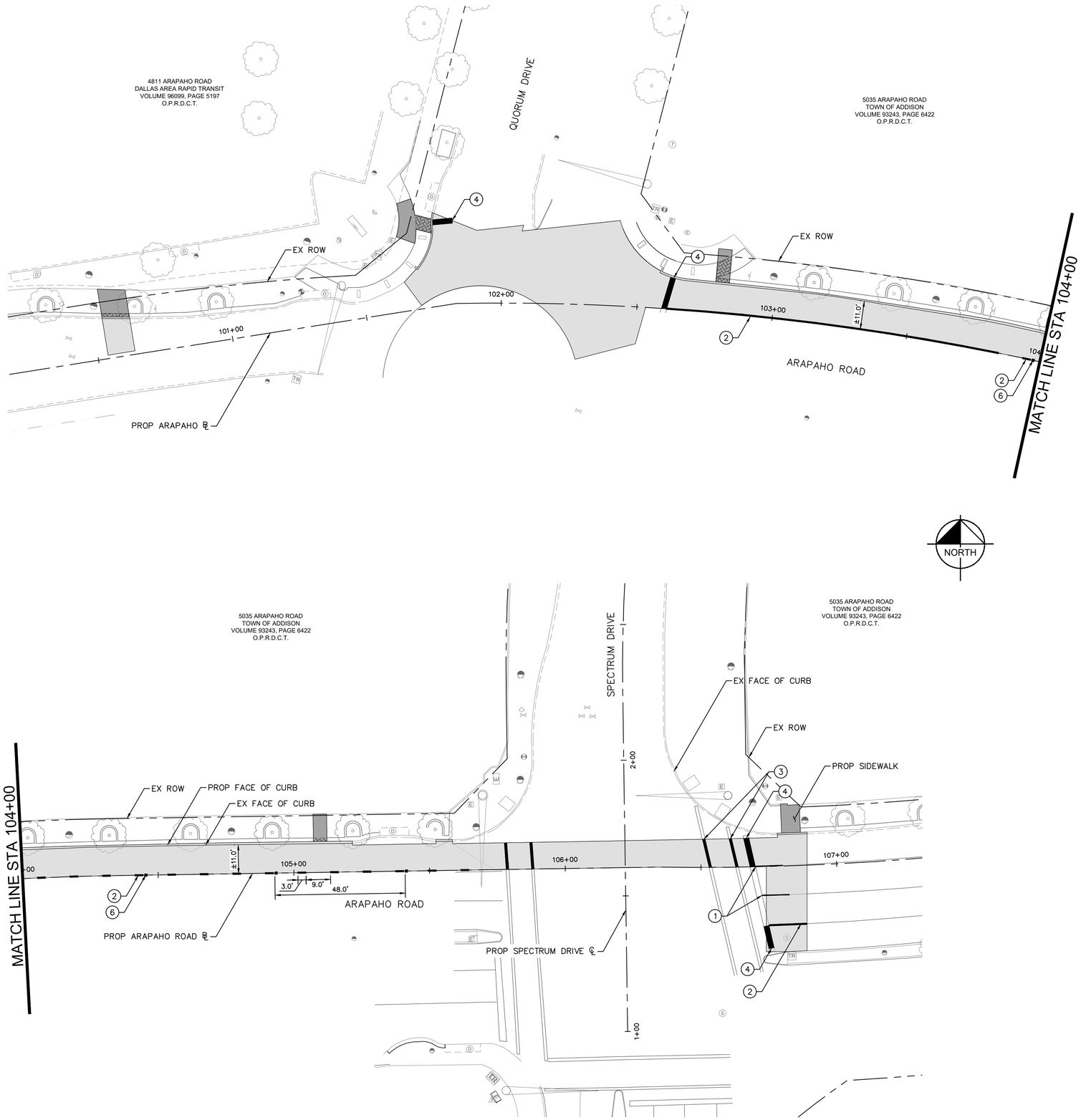

GRAPHIC SCALE IN FEET
0 10 20 40

STRIPING LEGEND

1	INSTALL 4" SOLID WHITE LINE
2	INSTALL 8" SOLID WHITE LINE
3	INSTALL 12" SOLID WHITE LINE
4	INSTALL 24" SOLID WHITE LINE
5	INSTALL TYPE II-C-R RAISED PAVEMENT MARKER
6	INSTALL TYPE I-C-R RAISED PAVEMENT MARKER

NOTES

1. CONTRACTOR IS RESPONSIBLE FOR RELOCATION OF ANY SIGNS AND COORDINATION WITH THE CITY ON ANY NECESSARY MODIFICATIONS.
2. ALL EXISTING PAVEMENT MARKINGS IN CONFLICT WITH PROPOSED PAVEMENT MARKING SHALL BE REMOVED (NO SEPARATE PAY).

Know what's **below.**
Call before you dig.

No.	REVISIONS	DATE	BY

PROJECT NO. C00057/ BID NO. 27-31

Kimley»Horn
225 E. JOHN W. CARPENTER FREEWAY SUITE 1100
IRVING, TX 75062
PHONE: 214.565.0660
WWW.KIMLEY-HORN.COM

© 2026 KIMLEY-HORN AND ASSOCIATES, INC.

TEXAS REGISTERED ENGINEERING FIRM #F-928

11/06/2026
STATE OF TEXAS
L. NATHAN ANTE
96866
LICENSED
PROFESSIONAL ENGINEER
L. Nathan Ante

KHA PROJECT 063543066		DESIGNED BY	KCH
DATE	11/06/2026	DRAWN BY	ZMZ
SCALE	AS SHOWN	CHECKED BY	FLS

ADDISON
ADDISON JUNCTION
PUBLIC
INFRASTRUCTURE
IMPROVEMENTS

PAVEMENT MARKING AND SIGNING
ARAPAHO ROAD
BEGIN TO END

SHEET NUMBER
95

Plotted By: Zmantil, Zane November 06, 2026 02:48:20pm C:\USERS\ADDZane.Valverde-Hiron\DESKTOP\ADDISON JUNCTION PUBLIC\Project Files\CADD\Plan Sheets\PAVEMENT MARKING - ARAPAHO ROAD.dwg
This electronic file is the property of Kimley-Horn and Associates, Inc. and is not to be used for any purpose other than the specific project, extensions and purposes described herein without the prior written authorization and adaptation by Kimley-Horn and Associates, Inc. shall be without liability to Kimley-Horn and Associates, Inc. Reuse or modification of these electronic files for other projects or any unauthorized use or distribution is prohibited. Reuse or modification of this document without written authorization and adaptation by Kimley-Horn and Associates, Inc. shall be without liability to Kimley-Horn and Associates, Inc. Reuse or modification of these electronic files for other projects or any unauthorized use or distribution is prohibited. Reuse or modification of this document without written authorization and adaptation by Kimley-Horn and Associates, Inc. shall be without liability to Kimley-Horn and Associates, Inc.

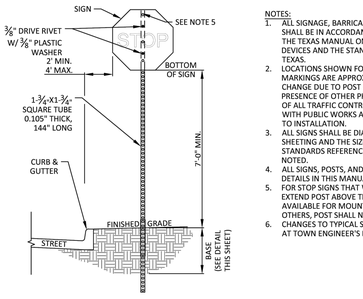

TYPICAL POST DETAIL
N.T.S.

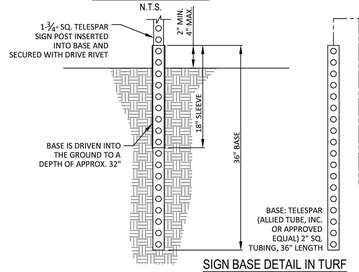

SIGN BASE DETAIL IN TURF
N.T.S.

NOTES:
1. ALL SIGNAGE, BARRICADES, AND PAVEMENT MARKINGS SHALL BE IN ACCORDANCE WITH THE LATEST REVISIONS OF THE TEXAS MANUAL ON UNIFORM TRAFFIC CONTROL DEVICES AND THE STANDARD HIGHWAY SIGN DESIGNS FOR TEXAS.
2. LOCATIONS SHOWN FOR SIGNAGE AND PAVEMENT MARKINGS ARE APPROXIMATE; FINAL LOCATIONS MAY CHANGE DUE TO POST CONSTRUCTION CONDITIONS AND PRESENCE OF OTHER PHYSICAL FEATURES. FINAL LOCATION OF ALL TRAFFIC CONTROL DEVICES SHALL BE FIELD VERIFIED WITH PUBLIC WORKS AND ENGINEERING SERVICES PRIOR TO INSTALLATION.
3. ALL SIGNS SHALL BE DIAMOND GRADE 3 WITH REFLECTIVITY SHEETING AND THE SIZES SHALL BE PER THE PRESCRIBED STANDARDS REFERENCED ABOVE, UNLESS OTHERWISE NOTED.
4. ALL SIGNS, POSTS, AND MATERIALS SHALL BE INSTALLED PER DETAILS IN THIS MANUAL.
5. FOR STOP SIGNS THAT WILL ACCEPT FUTURE STREET SIGNS, EXTEND POST ABOVE THE STOP SIGN SO THAT 2 HOLES ARE AVAILABLE FOR MOUNTING AN EXTENSION TUBE. FOR ALL OTHERS, POST SHALL NOT EXTEND ABOVE THE SIGN.
6. CHANGES TO TYPICAL SIGN POST LOCATION MAY BE MADE AT TOWN ENGINEER'S DISCRETION.

PUBLIC WORKS & ENGINEERING SERVICES	SIGN POST IN TURF DETAIL	STANDARD CONSTRUCTION DETAILS TRAFFIC		
		DATE: JANUARY 2022	REV DATE: -	SHEET: SD-T01

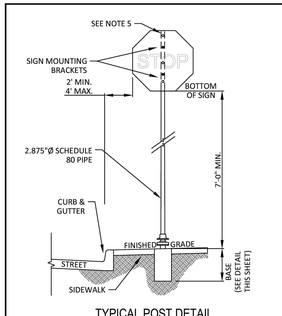

TYPICAL POST DETAIL
N.T.S.

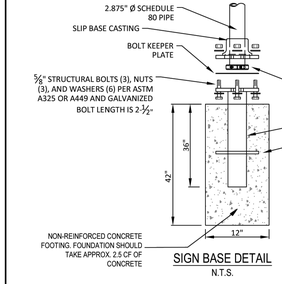

SIGN BASE DETAIL
N.T.S.

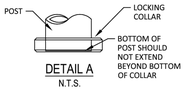

DETAIL A
N.T.S.

NOTES:
1. ALL SIGNAGE, BARRICADES, AND PAVEMENT MARKINGS SHALL BE IN ACCORDANCE WITH THE LATEST REVISIONS OF THE TEXAS MANUAL ON UNIFORM TRAFFIC CONTROL DEVICES AND THE STANDARD HIGHWAY SIGN DESIGNS FOR TEXAS.
2. LOCATIONS SHOWN FOR SIGNAGE AND PAVEMENT MARKINGS ARE APPROXIMATE; FINAL LOCATIONS MAY CHANGE DUE TO POST CONSTRUCTION CONDITIONS AND PRESENCE OF OTHER PHYSICAL FEATURES. FINAL LOCATION OF ALL TRAFFIC CONTROL DEVICES SHALL BE FIELD VERIFIED WITH THE PUBLIC WORKS AND ENGINEERING SERVICES PRIOR TO INSTALLATION.
3. ALL SIGNS SHALL BE DIAMOND GRADE 3 WITH REFLECTIVITY SHEETING AND THE SIZES SHALL BE PER THE PRESCRIBED STANDARDS REFERENCED ABOVE, UNLESS OTHERWISE NOTED.
4. ALL SIGNS, POSTS, AND MATERIALS SHALL BE INSTALLED PER DETAILS IN THIS MANUAL.
5. FOR STOP SIGNS THAT WILL ACCEPT FUTURE STREET SIGNS, EXTEND POST ABOVE THE STOP SIGN SO THAT 2 HOLES ARE AVAILABLE FOR MOUNTING AN EXTENSION TUBE. FOR ALL OTHERS, POST SHALL NOT EXTEND ABOVE THE SIGN.
6. CHANGES TO TYPICAL SIGN POST LOCATION MAY BE MADE AT TOWN ENGINEER'S DISCRETION.

SPECIFICATIONS FOR SCHEDULE 80 PIPE (2.875" OUTSIDE DIAMETER)
- 0.267" NOMINAL WALL THICKNESS
- STEEL TUBING PER ASTM A500 Gr C
- OTHER SEAMLESS OR ELECTRIC-RESISTANT WELDED STEEL TUBING OR PIPE WITH EQUIVALENT OUTSIDE DIAMETER AND WALL THICKNESS MAY BE USED IF IT MEETS THE FOLLOWING:
  - 46,000 PSI MINIMUM YIELD STRENGTH
  - 62,000 PSI MINIMUM TENSILE STRENGTH
  - 21% MINIMUM ELONGATION IN 2"
- WALL THICKNESS (UNCOATED) SHALL BE WITHIN THE RANGE OF 0.248" TO 0.304"
- OUTSIDE DIAMETER (UNCOATED) SHALL BE WITHIN THE RANGE OF 2.855" TO 2.895"
- POWDER COATED FINISH, COLOR TO BE SELECTED BY THE TOWN OF ADDISON

PUBLIC WORKS & ENGINEERING SERVICES	SIGN POST IN SIDEWALK DETAIL	STANDARD CONSTRUCTION DETAILS TRAFFIC		
		DATE: JANUARY 2022	REV DATE: -	SHEET: SD-T02

NOTES:
1. THE GENERAL LAYOUT AND FORMAT OF THE STREET NAME SIGN SHALL BE AS SHOWN IN THE GRAPHIC ABOVE.
2. THE SIGN SHALL BE FABRICATED ON AN ALODINE COATED ALUMINUM SUBSTRATE, 0.080" THICK, AND SHALL BE 9" IN HEIGHT. THE LENGTH OF THE SIGN SHALL BE PROPORTIONATE TO THE STREET NAME, INCLUDING STREET NAME, SUFFIX, AND BLOCK NUMBER. THE SUBSTRATE SHALL HAVE AN APPROPRIATE RADIUS ON ALL FOUR CORNERS AND SHALL BE OF A FLAT BLADE DESIGN (EXTRUDED SUBSTRATE IS NOT ACCEPTABLE).
3. THE SUBSTRATE SHALL BE SHEETED WITH RETROREFLECTIVE, HIGH INTENSITY PRISMATIC MATERIAL (DIAMOND GRADE SHEETING (DG3)) AND SHALL BE WHITE IN COLOR. A PRESSURE SENSITIVE ELECTRO CUT OVERLAY FILM WILL BE USED FOR THE LETTERING AND WILL BE BLUE IN COLOR. THE FONT FOR ALL LETTERING AND NUMBERS SHALL BE BOLD HIGHWAY SERIES 'C'.
4. THE FIRST LETTER OF THE STREET NAME SHALL BE 5" IN HEIGHT. THE SUBSEQUENT LETTERS OF THE STREET NAME SHALL BE 4" IN HEIGHT. THE LETTERING OF THE SUFFIX SHALL BE ALL CAPITAL LETTERS AND SHALL BE 2.5" IN HEIGHT. THE SUFFIX MAY BE ABBREVIATED. THE SUFFIX SHALL BE PLACED IN THE UPPER RIGHT HAND CORNER OF THE SIGN. THE BLOCK NUMBER SHALL BE PLACED IN THE LOWER RIGHT HAND CORNER OF THE SIGN.



PUBLIC WORKS & ENGINEERING SERVICES	STREET NAME SIGN SPECIFICATIONS	STANDARD CONSTRUCTION DETAILS TRAFFIC		
		DATE: JANUARY 2022	REV DATE: -	SHEET: SD-T03

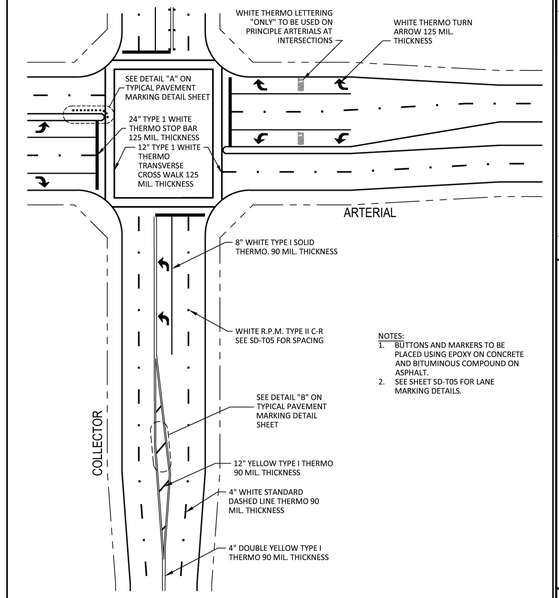

NOTES:
1. BUTTONS AND MARKERS TO BE PLACED USING EPOXY ON CONCRETE AND BITUMINOUS COMPOUND ON ASPHALT.
2. SEE SHEET SD-T05 FOR LANE MARKING DETAILS.

PUBLIC WORKS & ENGINEERING SERVICES	TYPICAL PAVEMENT MARKING LAYOUT	STANDARD CONSTRUCTION DETAILS TRAFFIC		
		DATE: JANUARY 2022	REV DATE: -	SHEET: SD-T04

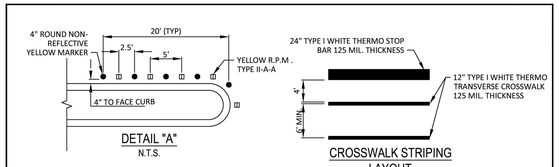

DETAIL "A"
N.T.S.

CROSSWALK STRIPING LAYOUT
N.T.S.

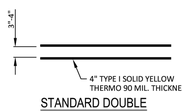

STANDARD DOUBLE YELLOW LINE
N.T.S.

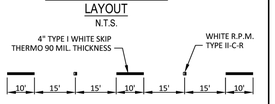



STANDARD DASHED LINE
N.T.S.

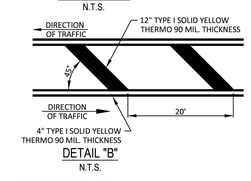

DETAIL "B"
N.T.S.

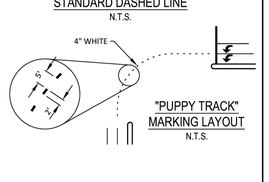

"PUPPY TRACK" MARKING LAYOUT
N.T.S.

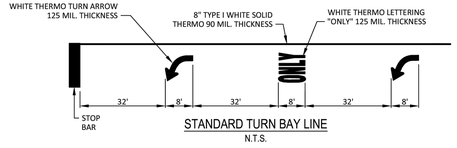

STANDARD TURN BAY LINE
N.T.S.

PUBLIC WORKS & ENGINEERING SERVICES	TYPICAL PAVEMENT MARKING DETAILS	STANDARD CONSTRUCTION DETAILS TRAFFIC		
		DATE: JANUARY 2022	REV DATE: -	SHEET: SD-T05

No.	REVISIONS	DATE	BY

PROJECT NO. C00057/ BID NO. 27-31

Kimley»Horn
225 E. JOHN W. CARPENTER FREEWAY SUITE 1100
IRVING, TX 75063
PHONE: 214-420-5600
WWW.KIMLEY-HORN.COM
© 2026 KIMLEY-HORN AND ASSOCIATES, INC.
TEXAS REGISTERED ENGINEERING FIRM #F-928

11/06/2026

STATE OF TEXAS
L. NATHAN ANTE
96656
LICENSED
PROFESSIONAL ENGINEER
L. Nathan Ante

KHA PROJECT 063543066	DATE 11/06/2026	SCALE AS SHOWN	DESIGNED BY KCH
		DRAWN BY ZMZ	CHECKED BY FLS

ADDISON
ADDISON JUNCTION PUBLIC INFRASTRUCTURE IMPROVEMENTS

PAVEMENT MARKING AND SIGNING STANDARD DETAILS

SHEET NUMBER
96

Plotted By: Zanetti, Zach - November 06, 2026 - 02:30:42pm C:\ACC\ACCDocs\Kimley-Horn\08354066-ADDISON JUNCTION PUBLIC\Project Files\CAD\PlanSheets\CITY DETAILS.dwg
This document, together with the concepts and designs presented herein, as an instrument of service, is intended only for the specific purpose and client for which it was prepared. Reuse of and improper reliance on this document without written authorization and adaptation by Kimley-Horn and Associates, Inc. shall be without liability to Kimley-Horn and Associates, Inc.

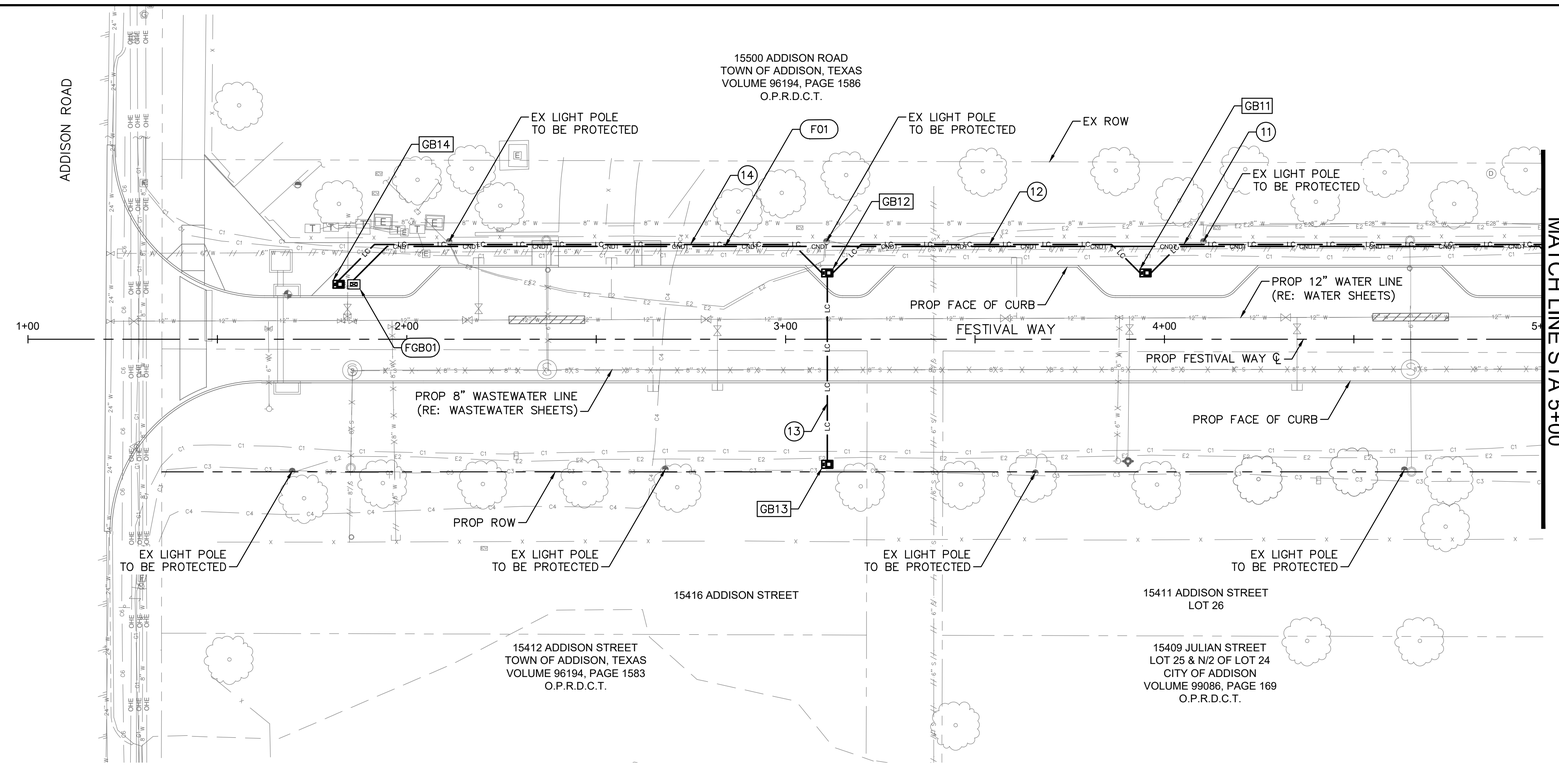

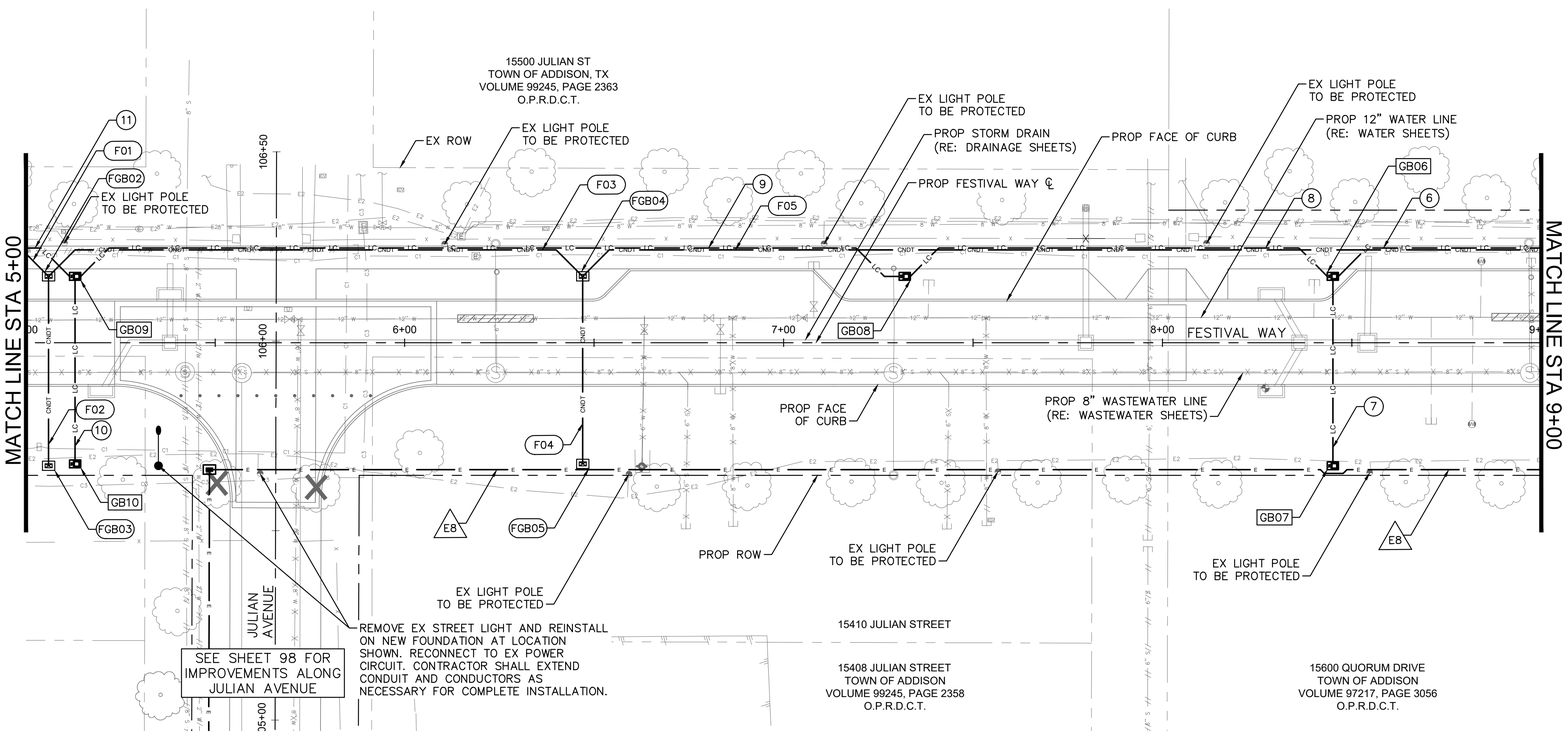

NORTH

GRAPHIC SCALE IN FEET
0 10 20 40

LEGEND

- EX ROW
- PROP ROW
- PROP STORM DRAIN
- E — PROP 2" ELECTRIC CONDUIT
- CNDT — PROP 4" FIBER OPTIC CONDUIT
- LC — PROP 2" LIGHTING CONDUIT
- ELECTRIC GROUND BOX (EGBXX)
- FIBER GROUND BOX (FGBXX)
- ILLUMINATION GROUND BOX (GBXX)
- P — PEDESTAL SERVICE
- EX — ELECTRIC CONDUIT RUN NUMBER
- FX — FIBER CONDUIT RUN NUMBER
- XX — LIGHTING CONDUIT RUN NUMBER

NOTES

1. CONTRACTOR TO COORDINATE WITH ONCOR FOR ELECTRICAL SERVICE CONNECTION.
2. THE INFORMATION SHOWN ON THESE DRAWINGS CONCERNING THE TYPE AND LOCATION OF UNDERGROUND UTILITIES ARE NOT GUARANTEED TO BE ACCURATE OR ALL INCLUSIVE. BEFORE CONSTRUCTION, CONTRACTOR TO MAKE DETERMINATION AS TO THE TYPE AND LOCATION OF UNDERGROUND UTILITIES TO AVOID DAMAGE THERETO.
3. CONDUIT/CONDUCTOR RUNS SHOWN ARE DIAGRAMMATICAL ONLY. THE BEST FINAL CONDUIT ROUTING SHALL BE DETERMINED BY THE CONTRACTOR AT THE TIME OF CONSTRUCTION.
4. CONTRACTOR SHALL ENSURE THAT ALL EXISTING ASSEMBLIES OPERATIONAL AT THE BEGINNING OF CONSTRUCTION ARE OPERATIONAL AT THE COMPLETION OF THE PROJECT (NO SEPARATE PAY).
5. FIBER AND ILLUMINATION GROUND BOXES TO BE OFFSET AT LEAST 2.5 FT FROM EDGE OF CURB TO EDGE OF GROUND BOX. FOR NARROW MEDIANS WITH LIMITED SPACE, GROUND BOXES TO BE CENTERED IN THE MEDIAN.
6. CONTRACTOR TO PROTECT ALL EXISTING CONDUIT AND LIGHTING APPURTENANCES. ANY EXISTING CONDUIT AND LIGHTING APPURTENANCES DAMAGED BY CONTRACTOR'S OPERATIONS SHALL BE REPAIRED OR REPLACED BY THE CONTRACTOR. NO SEPARATE PAY.

Know what's below.
Call before you dig.

No.	REVISIONS	DATE	BY

PROJECT NO. C00057/ BID NO. 27-31

Kimley»Horn
225 E. JOHN W. CARPENTER FREEWAY SUITE 1100
IRVING, TX 75062
PHONE: 214-369-2300
WWW.KIMLEY-HORN.COM
© 2026 KIMLEY-HORN AND ASSOCIATES, INC.
TEXAS REGISTERED ENGINEERING FIRM #F-928

11/06/2026

STATE OF TEXAS
L. NATHAN ANTE
96866
REGISTERED
PROFESSIONAL ENGINEER

KHA PROJECT 063543066			
DATE 11/06/2026	SCALE	AS SHOWN	
	DESIGNED BY	KCH	
	DRAWN BY	ZMZ	
	CHECKED BY	FLS	

ADDISON
ADDISON JUNCTION PUBLIC INFRASTRUCTURE IMPROVEMENTS

ILLUMINATION AND FIBER FESTIVAL WAY BEGIN TO STA 9+00

SHEET NUMBER
97

Plotted By: Mcmay, Jeneth November 06, 2026 - 01:36:10pm G:\ACD\ACDmain\Working\063543066-ADDISON JUNCTION PUBLIC\Proj\Sheet\ILLUMINATION - FESTIVAL WAY.dwg
This document, together with the concepts and designs presented herein, as an instrument of service, is intended only for the specific purpose and client for which it was prepared. Reuse of and improper reliance on this document without written authorization and adaptation by Kimley-Horn and Associates, Inc. shall be without liability to Kimley-Horn and Associates, Inc.

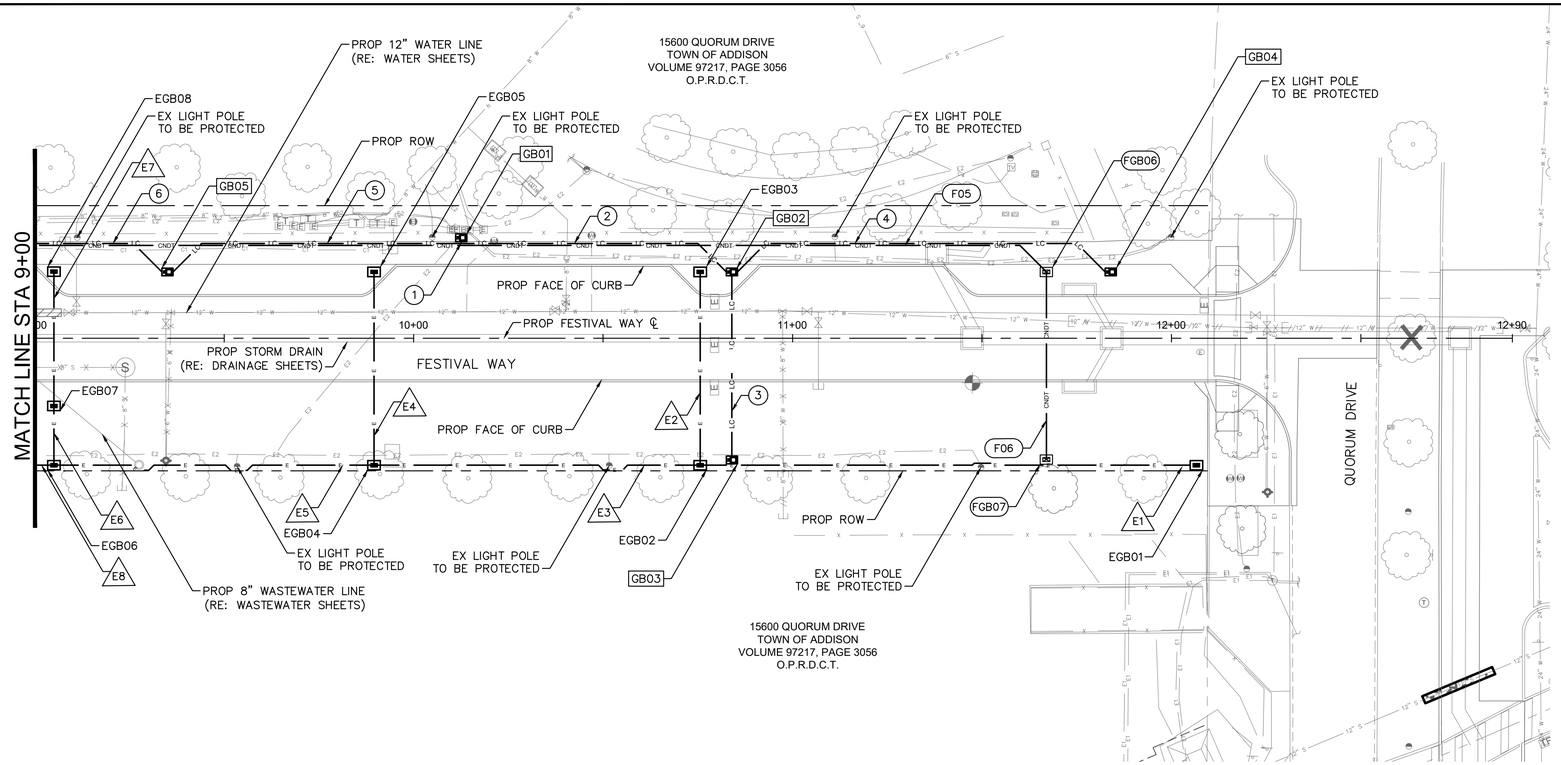

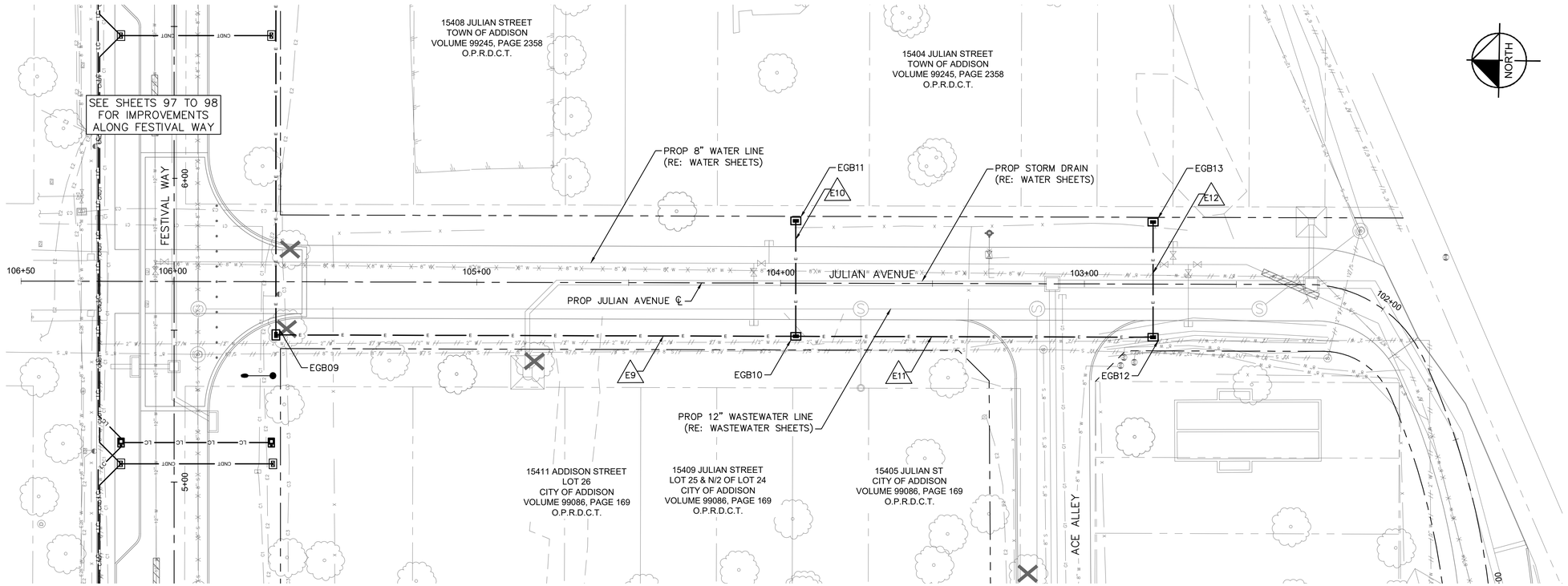

NORTH

GRAPHIC SCALE IN FEET
0 10 20 40

LEGEND

- EX ROW
- PROP ROW
- PROP STORM DRAIN
- E — PROP 2" ELECTRIC CONDUIT
- CNDT — PROP 4" FIBER OPTIC CONDUIT
- LC — PROP 2" LIGHTING CONDUIT
- ELECTRIC GROUND BOX (EGBXX)
- FIBER GROUND BOX (FGBXX)
- ILLUMINATION GROUND BOX (GBXX)
- P — PEDESTAL SERVICE
- EX — ELECTRIC CONDUIT RUN NUMBER
- FX — FIBER CONDUIT RUN NUMBER
- XX — LIGHTING CONDUIT RUN NUMBER

NOTES

1. CONTRACTOR TO COORDINATE WITH ONCOR FOR ELECTRICAL SERVICE CONNECTION.
2. THE INFORMATION SHOWN ON THESE DRAWINGS CONCERNING THE TYPE AND LOCATION OF UNDERGROUND UTILITIES ARE NOT GUARANTEED TO BE ACCURATE OR ALL INCLUSIVE. BEFORE CONSTRUCTION, CONTRACTOR TO MAKE DETERMINATION AS TO THE TYPE AND LOCATION OF UNDERGROUND UTILITIES TO AVOID DAMAGE THERETO.
3. CONDUIT/CONDUCTOR RUNS SHOWN ARE DIAGRAMMATICAL ONLY. THE BEST FINAL CONDUIT ROUTING SHALL BE DETERMINED BY THE CONTRACTOR AT THE TIME OF CONSTRUCTION.
4. CONTRACTOR SHALL ENSURE THAT ALL EXISTING ASSEMBLIES OPERATIONAL AT THE BEGINNING OF CONSTRUCTION ARE OPERATIONAL AT THE COMPLETION OF THE PROJECT (NO SEPARATE PAY).
5. FIBER AND ILLUMINATION GROUND BOXES TO BE OFFSET AT LEAST 2.5 FT FROM EDGE OF CURB TO EDGE OF GROUND BOX. FOR NARROW MEDIANS WITH LIMITED SPACE, GROUND BOXES TO BE CENTERED IN THE MEDIAN.
6. CONTRACTOR TO PROTECT ALL EXISTING CONDUIT AND LIGHTING APPURTENANCES. ANY EXISTING CONDUIT AND LIGHTING APPURTENANCES DAMAGED BY CONTRACTOR'S OPERATIONS SHALL BE REPAIRED OR REPLACED BY THE CONTRACTOR. NO SEPARATE PAY.

Know what's **below.**
Call before you dig.

No.	REVISIONS	DATE	BY

PROJECT NO. C00057/ BID NO. 27-31

Kimley»Horn
225 E. JOHN W. CARPENTER FREEWAY SUITE 1100
IRVING, TX 75062
PHONE: 214-369-2300
WWW.KIMLEY-HORN.COM
© 2026 KIMLEY-HORN AND ASSOCIATES, INC.
TEXAS REGISTERED ENGINEERING FIRM #F-928

11/06/2026

STATE OF TEXAS
L. NATHAN ANTE
96866
LICENSED
PROFESSIONAL ENGINEER
L. Nathan Ante

KHA PROJECT 063543066			
DATE 11/06/2026	SCALE AS SHOWN	DESIGNED BY KCH	DRAWN BY ZMZ	CHECKED BY FLS

ADDISON
ADDISON JUNCTION
PUBLIC
INFRASTRUCTURE
IMPROVEMENTS

ILLUMINATION
AND FIBER
FESTIVAL WAY
STA 9+00 TO END
JULIAN AVENUE

SHEET NUMBER
98

Plotted By: Morrow, Jeneth November 06, 2026 01:38:13pm G:\ACCT\ACD\Cities\Addison\063543066-ADDISON JUNCTION PUBLIC\Project Files\3400\Plan Sheets\ILLUMINATION - FESTIVAL WAY.dwg
This document, together with the concepts and designs presented herein, as an instrument of service, is intended only for the specific purpose and client for which it was prepared. Reuse of and improper reliance on this document without written authorization and adaptation by Kimley-Horn and Associates, Inc. shall be without liability to Kimley-Horn and Associates, Inc.

SUMMARY OF ELECTRIC CONDUIT					
RUN NO	RUN LENGTH	CIRCUIT	CONDUIT TYPE	CONDUIT	
				2 IN. PVC SCH 40	2 IN. PVC SCH 80
E1	135	C	T	135	
E2	55	C	T		55
E3	90	C	T	90	
E4	55	C	T		55
E5	90	C	T	90	
E6	20	C	T		20
E7	40	C	T		40
E8	360	C	T	360	
E9	175	C	T	175	
E10	40	C	T		40
E11	120	C	T	120	
E12	40	C	T		40
			TOTALS	970	250
		TOTAL CONDUIT		1220	

NOTES:
1. THERE SHALL BE NO EXTRA COMPENSATION IF THE CONTRACTOR CHOOSES TO BORE CONDUIT RATHER THAN TRENCH,
2. LIGHTING CONDUIT IN THE PLANS IS SCHEMATIC. CONTRACTOR SHALL BE REQUIRED TO COORDINATE CONDUIT PLACEMENT WITH THE TOWN OF ADDISON PRIOR TO INSTALLATION.
3. CONTRACTOR SHALL VERIFY ULTIMATE CONDUIT LOCATION.
4. CONDUIT DENOTATION:
   T–TRENCH

SUMMARY OF LIGHTING CONDUIT					
RUN NO	RUN LENGTH	CIRCUIT	CONDUIT TYPE	CONDUIT	
				2 IN. PVC SCH 40	2 IN. PVC SCH 80
1	5	A	T	5	
2	75	A	T	75	
3	50	A	T		50
4	105	A	T	105	
5	85	B	T	85	
6	95	B	T	95	
7	50	B	T		50
8	120	B	T	120	
9	225	B	T	225	
10	50	B	T		50
11	125	B	T	125	
12	90	B	T	90	
13	50	B	T		50
14	140	B	T	140	
			TOTALS	1065	200
		TOTAL CONDUIT		1265	

NOTES:
1. THERE SHALL BE NO EXTRA COMPENSATION IF THE CONTRACTOR CHOOSES TO BORE CONDUIT RATHER THAN TRENCH,
2. LIGHTING CONDUIT IN THE PLANS IS SCHEMATIC. CONTRACTOR SHALL BE REQUIRED TO COORDINATE CONDUIT PLACEMENT WITH THE TOWN OF ADDISON PRIOR TO INSTALLATION.
3. CONTRACTOR SHALL VERIFY ULTIMATE CONDUIT LOCATION.
4. CONDUIT DENOTATION:
   T–TRENCH

SUMMARY OF FIBER SYSTEM			
FIBER RUN NO	CONDUIT TYPE	CONDUIT QUANTITY	RUN LENGTH
		4" HDPE	
F01	T	1	335
F02	T	1	60
F03	T	1	150
F04	T	1	60
F05	T	1	535
F06	T	1	60
CONDUIT TOTAL (LF)			1,200

NOTES:
1. THERE SHALL BE NO EXTRA COMPENSATION IF THE CONTRACTOR CHOOSES TO BORE CONDUIT RATHER THAN TRENCH.
2. FIBER CONDUIT IN THE PLANS IS SCHEMATIC. CONTRACTOR SHALL BE REQUIRED TO COORDINATE CONDUIT PLACEMENT WITH THE TOWN OF ADDISON PRIOR TO INSTALLATION.
3. CONTRACTOR SHALL VERIFY ULTIMATE CONDUIT LOCATION.
4. CONDUIT DENOTATION:
   T–TRENCH

PROJECT NO. C00057/ BID NO. 27-31

No.	REVISIONS	DATE	BY

Kimley»Horn
225 E. JOHN W. CARPENTER FREEWAY SUITE 1100
IRVING, TX 75062
PHONE: 214.565.0660
WWW.KIMLEY-HORN.COM
© 2026 KIMLEY-HORN AND ASSOCIATES, INC.
TEXAS REGISTERED ENGINEERING FIRM #F-928

11/06/2026



KHA PROJECT 063543066
DATE 11/06/2026
SCALE AS SHOWN
DESIGNED BY KCH
DRAWN BY ZMZ
CHECKED BY FLS

ADDISON
ADDISON JUNCTION
PUBLIC
INFRASTRUCTURE
IMPROVEMENTS

ILLUMINATION AND FIBER
TABLES

SHEET NUMBER
99

Plotted By: Mcmay, Jonesh November 06, 2026 01:36:13pm G:\ACCN\ACCDocs\Kimley-Horn\063543066-ADDISON JUNCTION PUBLIC\Project Files\CAD\PlanSheet\ILLUMINATION - FESTIVAL WAY.dwg
This document, together with the concepts and designs presented herein, as an instrument of service, is intended only for the specific purpose and client for which it was prepared. Reuse of and improper reliance on this document without written authorization and adaptation by Kimley-Horn and Associates, Inc. shall be without liability to Kimley-Horn and Associates, Inc.

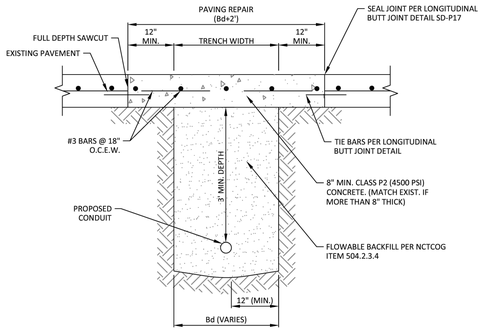

NOTES:

1. REPAIRS SHALL EXTEND TO 1' BEYOND EACH SIDE OF TRENCH (Bd).
2. REINFORCEMENT CHAIRS OR APPROVED EQUAL SHALL BE USED.
3. REPAIRS SHALL MATCH EXISTING GRADE.
4. NOT LESS THAN HALF A PANEL SHALL REMAIN AFTER SAWCUT.
5. TOWN INSPECTOR WILL DETERMINE FINAL PAVEMENT REMOVAL LIMITS. ACTUAL LIMITS OF REMOVAL MAY VARY BASED ON SITE CONDITIONS.

ADDISON PUBLIC WORKS & ENGINEERING SERVICES	UTILITY INSTALLATION BENEATH CONCRETE ROAD SURFACE	STANDARD CONSTRUCTION DETAILS FRANCHISE UTILITIES TRENCHLINE & STREET RESTORATION	DATE: JANUARY 2022	REV DATE: -	SHEET: SD-U01

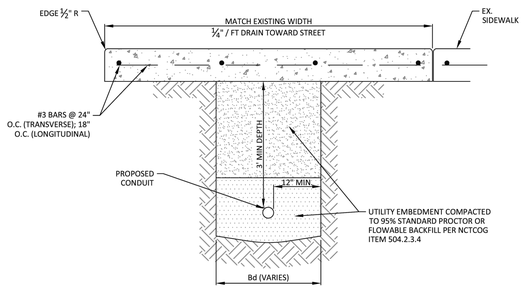

NOTES:

1. REPAIRS SHALL INCLUDE FULL PANELS FROM JOINT TO JOINT, AND ANY ADJACENT DAMAGED PANELS INDEPENDENT OF Bd.
2. REINFORCEMENT CHAIRS OR APPROVED DEVICE SHALL BE USED.
3. SEE CONCRETE SIDEWALK STANDARD DETAIL FOR SIDEWALK JOINT DETAIL.
4. ALL DISTURBED AREAS SHALL BE RESODDED (UNLESS OTHERWISE APPROVED).
5. BACKFILL AND EMBEDMENT PARTICLE SIZE SHALL NOT EXCEED 3" IN ANY DIRECTION.
6. CONNECT TO EXISTING SIDEWALK WITH BARS MATCHING EXISTING INSTALLATION.
7. TOWN INSPECTOR WILL DETERMINE FINAL PAVEMENT REMOVAL LIMITS. ACTUAL LIMITS OF REMOVAL MAY VARY BASED ON SITE CONDITIONS

ADDISON PUBLIC WORKS & ENGINEERING SERVICES	UTILITY INSTALLATION BENEATH SIDEWALK	STANDARD CONSTRUCTION DETAILS FRANCHISE UTILITIES TRENCHLINE & STREET RESTORATION	DATE: JANUARY 2022	REV DATE: -	SHEET: SD-U03

Plotted By: Zanetti, Zach - November 06, 2026 - 02:30:47pm C:\ACC\ACCDocs\Kimley-Horn\08.354.3066-ADDISON JUNCTION PUBLIC\Project Files\CADD\PlanSheets\CITY DETAILS.dwg
This document, together with the concepts and designs presented herein, as an instrument of service, is intended only for the specific purpose and client for which it was prepared. Reuse of and improper reliance on this document without written authorization and adaptation by Kimley-Horn and Associates, Inc. shall be without liability to Kimley-Horn and Associates, Inc.

No.	REVISIONS	DATE	BY

PROJECT NO. C00057/ BID NO. 27-31

Kimley»Horn
225 E. JOHN W. CARPENTER FREEWAY SUITE 1100
IRVING, TX 75063
PHONE: 214-420-5600
WWW.KIMLEY-HORN.COM
© 2026 KIMLEY-HORN AND ASSOCIATES, INC.
TEXAS REGISTERED ENGINEERING FIRM #F-928

11/06/2026

STATE OF TEXAS
L. NATHAN ANTE
96666
LICENSED
PROFESSIONAL ENGINEER
L. Nathan Ante

KHA PROJECT	063543066
DATE	11/06/2026
SCALE	AS SHOWN
DESIGNED BY	KCH
DRAWN BY	ZMZ
CHECKED BY	FLS

ADDISON
ADDISON JUNCTION
PUBLIC
INFRASTRUCTURE
IMPROVEMENTS

ILLUMINATION
STANDARD DETAILS

SHEET NUMBER
100

DISCLAIMER:
The use of this standard is governed by the "Texas Engineering Practice Act". No warranty of any kind is made by TxDOT for any purpose whatsoever. TxDOT assumes no responsibility for the conversion of this standard to other formats or for incorrect results or damages resulting from its use.

DATE:
FILE:

GENERAL NOTES FOR ALL ELECTRICAL WORK

1. The location of all conduits, junction boxes, ground boxes, and electrical services is diagrammatic and may be shifted to accommodate field conditions.

2. Provide new, unused, and undamaged materials. Ensure that all materials and installations comply with the National Electrical Code (NEC), TxDOT standards and specifications, National Electrical Manufacturers Association (NEMA), and are listed by Underwriters Laboratories (UL) or a Nationally Recognized Testing Lab (NRTL). NRTLs such as CSA Group, Intertek Testing Services, or FM Approvals can be considered equivalent to UL. Where reference is made to NEMA listed devices, International Electrotechnical Commission (IEC) listed devices will not be considered an acceptable equal to NEMA. Faulty fabrication or poor workmanship in any material, equipment, or installation is justification for rejection. Replace or reinstall rejected material or equipment at no additional cost to the Department.

3. Miscellaneous nuts, bolts, and hardware, except for high strength bolts, may be stainless steel when plans specify galvanized, provided the bolt size is 1/2 in. or less in diameter.

4. Provide the following test equipment as required by the Engineer to confirm compliance with the contract and the NEC: voltmeter, ammeter, megohm meter (1000 volt DC), ground resistance tester, torque wrenches, and torque screwdrivers. Ensure all equipment has been properly calibrated within the last year. Provide calibration certification to the Engineer upon request. Operate test equipment during inspection as requested by the Engineer.

5. Install grounding as shown on the plans and in accordance with the NEC. Ensure all metallic conduits, metal poles, luminaires, and metal enclosures are bonded to an equipment grounding conductor. Provide stranded bare copper or green insulated grounding conductors. Ground rods, connectors, and bonding jumpers are subsidiary to the various bid items.

6. When required by the Engineer, notify the Department in writing of materials from the Material Producer List (MPL) intended for use on each project. Prequalified materials are listed on the MPL on TxDOT's website under "Roadway Illumination and Electrical Supplies." No substitutions will be allowed for materials on this list.

CONDUIT

A. MATERIALS

1. Provide conduit, junction boxes, fittings, and hardware per TxDOT Departmental Material Specification DMS-11030, "Conduit" and Item 618, "Conduit" of TxDOT's "Standard Specifications for Construction and Maintenance of Highways, Streets, And Bridges," latest edition. Provide conduits listed under Item 618 on the MPL under "Roadway Illumination and Electrical Supplies." Provide conduit types according to the descriptive code or as shown on the plans. Do not substitute other types of conduits for those shown. Provide Liquidtight Flexible Metal Conduit (LFMC) when flexible conduit is called for on galvanized steel Rigid Metal Conduit (RMC) systems. Provide Liquidtight Flexible Nonmetallic Conduit (LFNC) when flexible conduit is called for on Polyvinyl Chloride (PVC) systems.

2. Provide galvanized steel RMC for all exposed conduits, unless otherwise shown on the plans. Properly bond all metal conduits.

3. Unless otherwise shown on the plans, provide junction boxes with a minimum size as shown in the following table, which applies to the greatest number of conductors entering the box through one conduit with no more than four conduits per box. When a mixture of conductor sizes are present, count the conductors as if all are of the larger size. For situations not applicable to this table, size junction boxes per the NEC.

JUNCTION BOX SIZES

AWG	3 CONDUCTORS	5 CONDUCTORS	7 CONDUCTORS
#1	10" x 10" x 4"	12" x 12" x 4"	16" x 16" x 4"
#2	8" x 8" x 4"	10" x 10" x 4"	12" x 12" x 4"
#4	8" x 8" x 4"	10" x 10" x 4"	10" x 10" x 4"
#6	8" x 8" x 4"	8" x 8" x 4"	10" x 10" x 4"
#8	8" x 8" x 4"	8" x 8" x 4"	8" x 8" x 4"

4. Junction boxes with internal volumes up to 100 cu. in. and that are supported by entering raceways must have threaded entries or hubs identified for the intended purpose and be supported by connection of two or more rigid metal conduits. Secure conduit within 3 ft. of the box or within 18 in. of the box if all conduit entries are on the same side. Mechanically secure all junction boxes with an internal volume greater than 100 cu. in.

5. Provide hot dipped galvanized cast iron or sand cast aluminum outlet boxes for junction boxes containing only 10 AWG or 12 AWG conductors. Do not use die cast aluminum boxes. Size outlet boxes according to the NEC.

6. Do not use Intermediate Metal Conduit (IMC) or Electrical Metallic Tubing (EMT) unless specifically required by the plan sheets. When EMT is called for, provide junction boxes sized as directed above, listed and approved for outdoor use, unless otherwise noted on the plans. Provide junction boxes for IMC conduit systems that meet the same requirements for junction boxes used with RMC systems.

7. Provide PVC junction boxes intended for outdoor use on PVC conduit systems, unless otherwise noted on the plans.

8. Provide PVC elbows, unless otherwise shown in the plans. Use only a flat, high tensile strength polyester fiber pull tape for pulling conductors through the PVC conduit system.

A. MATERIALS (CONTINUED)

9. When galvanized steel RMC elbows are specifically called for in the plans and any portion of the RMC elbow is buried less than 18 in. below grade or bottom of the ground box, ground the RMC elbow with a grounding bushing on a rigid metal extension. Grounding of the rigid metal elbow is not required if the entire RMC elbow is encased in a minimum of 2 in. of concrete. PVC extensions are allowed on these concrete encased rigid metal elbows. Elbows are subsidiary to various bid items.

10. When required, provide High-Density Polyethylene (HDPE) conduit with factory installed internal conductors according to DMS-11060, "Duct Cable." At the Contractor's request and with approval by the Engineer, substitute HDPE conduit with no conductors according to DMS-11030 for PVC conduit bid under Item 618. Provide conduit of the size and schedule as shown on the plans. Do not extend HDPE conduit into ground boxes or foundations. Provide PVC elbows at all ground boxes and foundations.

11. Use two-hole straps or strut straps when supporting 2 in. and larger conduits. On electrical service poles, properly sized stainless steel or hot dipped galvanized strut straps or stand-off straps are allowed on the service riser conduit.

B. CONSTRUCTION METHODS

1. Provide and install expansion joint conduit fittings on all structure-mounted conduits at the structure's expansion joints to allow for movement of the conduit. In addition, provide and install expansion joint fittings on all continuous runs of galvanized steel RMC conduit externally exposed on structures such as bridges at maximum intervals of 150 ft. When requested by the project Engineer, supply manufacturer's specification sheet for expansion joint conduit fittings. Repair or replace expansion joint fittings that do not allow for movement at no additional cost to the Department. Provide the method of determining the amount of expansion to the Engineer upon request. Do not use LFMC or LFNC as a substitute for the required expansion conduit fittings.

2. Space all conduit supports at maximum intervals of 5 ft. Install conduit spacers when attaching metal conduit to surfaces of concrete structures. See "Conduit Mounting Options" on ED(2). Install conduit supports within 3 ft. of all enclosures and conduit terminations.

3. Do not attach conduit supports directly to pre-stressed concrete beams, except as shown specifically in the plans or as approved by the Engineer.

4. Unless otherwise shown on the plans, jack or bore conduit placed beneath existing roadways, driveways, sidewalks, or after the base or surfacing operation has begun. Backfill and compact the bore pits below the conduit per Item 476 "Jacking, Boring, or Tunneling Pipe or Box" prior to installing conduit or duct cable to prevent bending of the connections.

5. When placing conduit in the subgrade of new roadways, backfill all trenches with excavated material unless otherwise noted on the plans. When placing conduit in the subbase of new roadways, backfill all trenches with cement-stabilized base as per requirements of Items: 110, "Excavation;" 400, "Excavation and Backfill for Structures;" 401, "Flowable Backfill;" 402, "Trench Excavation Protection;" and 403, "Temporary Special Shoring."

6. During construction, temporarily cap or plug open ends of all conduit and raceways immediately after installation to prevent entry of dirt, debris and animals. Temporary caps constructed of durable duct tape are allowed. Tightly affix the tape to the conduit opening. Clean out the conduit and prove it clear in accordance with Item 618 prior to installing any conductors.

7. Ensure conduit entry into the top of an enclosure is waterproof by installing conduit sealing hubs or using boxes with threaded bosses. This includes surface mounted safety switches, meter cans, service enclosures, auxiliary enclosures and junction boxes. Grounding bushings on water tight sealing hubs are not required.

8. Fit the ends of all PVC conduit terminations with bushings or bell end fittings. Provide and install a grounding bushing on all metal conduit terminations.

9. Install a bonding jumper from each grounding bushing to the nearest ground rod, grounding lug, or equipment grounding conductor. Ensure all bonding jumpers are the same size as the equipment grounding conductor. Bonding of conduit used as a casing under roadways for duct cable is not required, if the duct extends the full length through the casing.

10. Place conduits entering ground boxes so that the conduit openings are between 3 in. and 6 in. from the bottom of the box. See the ground box detail on sheet ED(4).

11. After completion of conductor installation, immediately seal ends of all conduits emerging from ground with duct seal, expandable foam, or other methods approved by the Engineer. Do not use silicone caulking. Do not use duct tape as a permanent seal.

12. File smooth the cut ends of all mounting strut and conduit. To avoid overspray, paint the field cut ends of all mounting strut and RMC (threaded or non-threaded) with zinc rich paint (94% min. zinc content as specified on DMS-8103 and listed on the MPL for Galvanizing Repair Paints) before installing. Use zinc rich paint to touch up galvanized material as allowed under Item 445 "Galvanizing." Do not paint non-galvanized material with zinc rich paint as an alternative for materials required to be galvanized.

13. For all conduits, ensure the burial depth is 18" min. For conduits placed under a roadway, ensure the burial depth is 24" min.

Texas Department of Transportation

Traffic Safety Division Standard

ELECTRICAL DETAILS CONDUITS & NOTES

ED(1)-25

FILE: ed1-25.dgn	DN: TxDOT	CK: TxDOT	DW: TxDOT	CK: TxDOT
©TxDOT April 2025	CONT	SECT	JOB	HIGHWAY
REVISIONS				
1-92 3-03 4-25 4-98 5-03 12-00 10-14	DIST	COUNTY		SHEET NO.
				101

71A

DISCLAIMER:
The use of this standard is governed by the "Texas Engineering Practice Act". No warranty of any kind is made by TxDOT for any purpose whatsoever. TxDOT assumes no responsibility for the conversion of this standard to other formats or for incorrect results or damages resulting from its use.

DATE:
FILE:

ELECTRIC CONDUIT TO BRIDGE DECK ATTACHMENT

HANGER ASSEMBLY DETAIL

CONDUIT MOUNTING CHANNEL		
"SPAN"	"W" x "H"	"T"
less than 2'	1 5/8" x 1 3/8"	12 ga.
2'-0" to 2'-6"	1 5/8" x 1 5/8"	12 ga.
>2'-6" to 3'-0"	1 5/8" x 2 7/16"	12 ga.

NOTE: Channels with round or short slotted hole patterns are allowed, provided the load carrying capacity is not reduced by more than 15%.

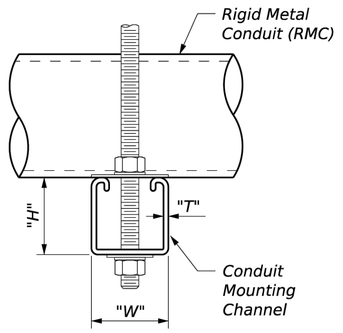

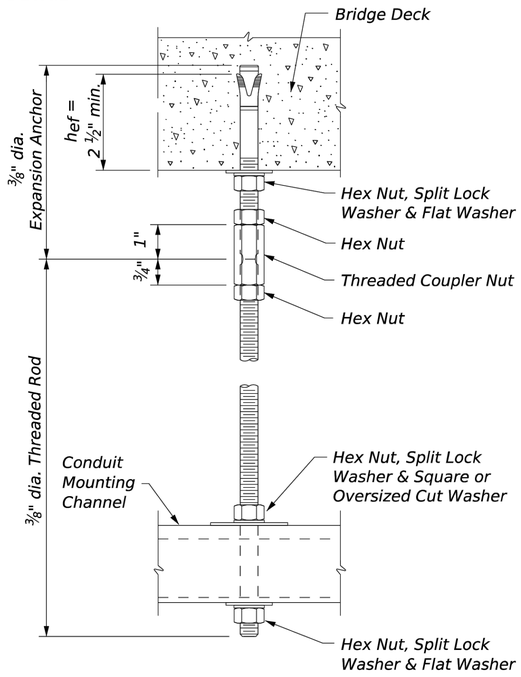

CONDUIT HANGING DETAIL

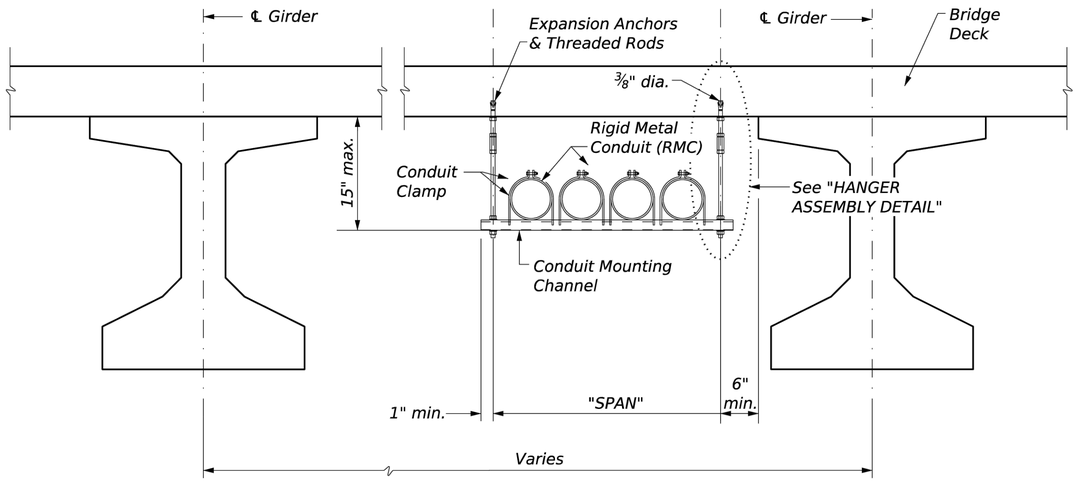

CONDUIT MOUNTING OPTIONS

ATTACHMENT TO CONCRETE SURFACES - SEE ED(1), CONDUIT, NOTE B.2

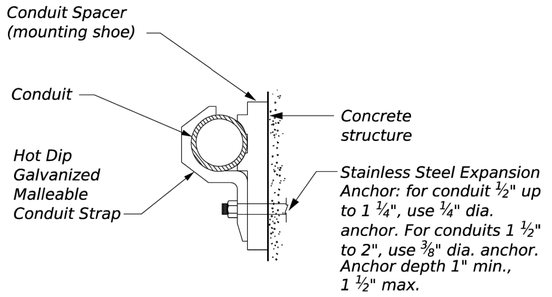

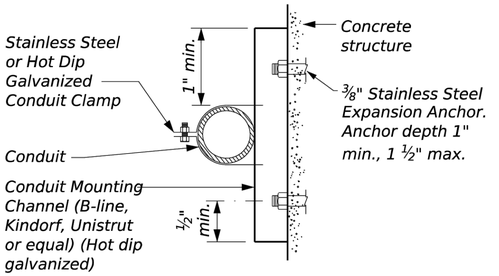

TYPICAL CONDUIT ENTRY TO BRIDGE STRUCTURE DETAIL

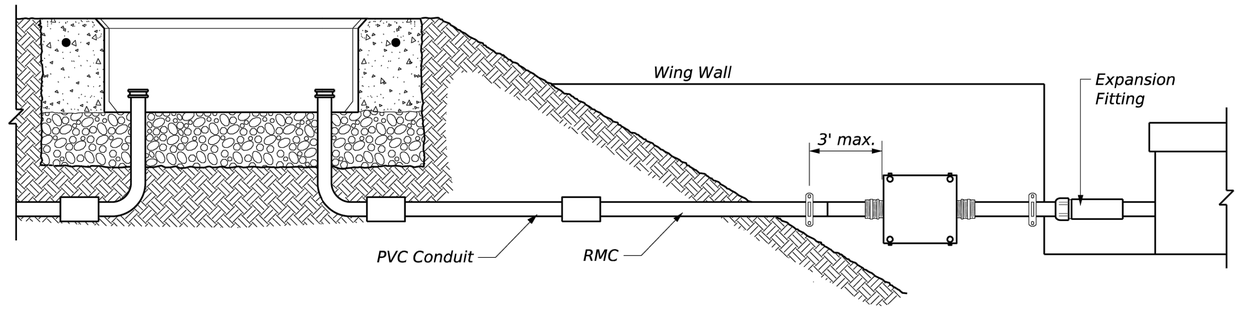

EXPANSION ANCHOR NOTES FOR BRIDGE DECK ATTACHMENT:

1. Use torque controlled mechanical expansion anchors that are approved for use in cracked concrete by the International Code Council, Evaluation Service (ICC-ES). The chosen anchor product shall have a designated ICC-ES Evaluation Report number, and its approval status shall be maintained on the ICC-ES website under Division 031600 for Concrete Anchors.

2. Unless otherwise approved by the Engineer: do not use adhesive anchors; do not use expansion anchors that are not included in the ICC-ES approval list; and do not use expansion anchors that are only approved for use in uncracked concrete.

3. Use anchors manufactured with stainless steel expansion wedges. Anchors manufactured with carbon steel expansion wedges are not allowed. Anchor bodies can be either zinc-plated carbon steel or stainless steel. Provide only stainless steel anchor bodies and expansion wedges for applications in marine environments.

4. Install anchors as shown on the plans and in accordance with the anchor manufacturer's published installation instructions. Arrange a field demonstration test to evaluate the procedures and tools. The test shall be witnessed and approved by the Engineer prior to furnishing anchors on the structure.

5. Prior to hole drilling, use rebar locator to ensure clearing of existing deck strands or reinforcement. Install anchors to ensure a minimum effective embedment depth, (h_{ef}), as shown. Increase (h_{ef}) as needed to ensure sufficient thread length for proper torquing and tightening of anchors.

6. Use anchors of at least 1600 lbs. tensile capacity (minimum of steel, concrete breakout, and concrete pullout strengths as determined by ACI 318 Appendix D) at the required minimum embedment depth (h_{ef}). No lateral loads shall be introduced after conduit installation.

Texas Department of Transportation

Traffic Safety Division Standard

ELECTRICAL DETAILS CONDUIT SUPPORTS

ED(2)-25

FILE: ed2-25.dgn	DN: TxDOT	CK: TxDOT	DW: TxDOT	CK: TxDOT
©TxDOT April 2025	CONT	SECT	JOB	HIGHWAY
REVISIONS				
10-14 10-22 4-25	DIST	COUNTY		SHEET NO.
				102

71B

DISCLAIMER:
The use of this standard is governed by the "Texas Engineering Practice Act". No warranty of any kind is made by TxDOT for any purpose whatsoever. TxDOT assumes no responsibility for the conversion of this standard to other formats or for incorrect results or damages resulting from its use.

DATE:
FILE:

ELECTRICAL CONDUCTORS

A. MATERIAL INFORMATION

1. Provide Type XHHW insulated copper conductors in accordance with Departmental Material Specification DMS-11040, "Conductors" and Item 620, "Electrical Conductors." Provide conductors as listed on the Material Producer List (MPL) on the Department web site under "Roadway Illumination and Electrical Supplies" Item 620.

2. Identify grounded (neutral) conductors with white insulation. Identify grounding conductors (ground wires) with green insulation or bare conductors. Identify ungrounded (hot) conductors with any color insulation except green, white, or gray. Keep color scheme consistent throughout the wiring system. Identify conductors 6 American Wire Gauge (AWG) and smaller by continuous color jacket. Identify electrical conductors 4 AWG and larger by continuous color jacket or by colored tape. When identifying conductors with colored tape, mark at least 6 in. of the conductor's insulation with half laps of tape at each accessible location.

3. Insulated grounding conductors may be substituted for bare conductors, unless otherwise shown in the plans. Insulated grounding conductors must be color coded green in accordance with Note 2.

4. Provide a 6 AWG bare solid copper grounding electrode conductor to bond the electrical service equipment to the concrete encased grounding electrode or the ground rod at the service location. Connect the grounding electrode conductor to the ground rod with a UL listed connector in accordance with DMS-11040. Connect the grounding electrode conductor to the concrete encased grounding electrode as shown in the plans.

5. Where two or more circuits are present in one conduit or enclosure, permanently label the conductors of each branch circuit by attaching a non-metallic, weather resistant tag around both circuit conductors at each accessible location. Provide one-piece tags with two $\frac{3}{16}$" straps, large enough to indicate circuit number, letter, or other identification as shown in the plans. Print circuit identification on the tag with a permanent marker.

6. Use listed compression connectors, mechanical lugs, terminal blocks, or split bolt connectors for splicing as specified in DMS-11040. Use hot melt adhesive tape to fill the gap and seal the ends of heat shrink tubing. Provide UL listed gel-filled insulating splice covers. Splicing materials, insulating materials, breakaway disconnects, splice covers, and fuse holders are subsidiary to various bid items.

B. CONSTRUCTION METHODS

1. Use only a flat, high tensile strength polyester fiber pull tape for pulling conductors through the conduit system.

2. Leave 2 ft. to 3 ft. of length for each conductor up to the splice in ground boxes. Leave 3 ft. to 4 ft. of length for each conductor in ground boxes when pulled through with no splice. Leave 1 ft. to 1.5 ft. of length for each conductor at enclosures and pole bases. Leave 1.5 ft. to 3 ft. of length as required by electric utility for conductors exiting weatherheads.

3. Make splices only in junction boxes, ground boxes, pole bases, or electrical enclosures and use only listed compression connectors, mechanical lugs, terminal blocks, or split bolt connectors. Insulate splices with heavy wall heat shrink tubing or gel-filled insulating splice covers to provide a watertight splice. Overlap conductor insulation with heat shrink tubing a minimum of 2 in. past both sides of the splice. Where heat shrink tubing may not shrink sufficiently to provide a watertight seal around the individual conductors, prior to heating the tubing, increase the diameter of the conductor insulation using hot melt adhesive tape to provide a watertight seal between each conductor and the heat shrink tubing. Ensure the tape extends past the heat shrink tubing. Use hot melt adhesive tape to fill the gap and seal the ends of heat shrink tubing. Heat shrink tubing that appears to have been burned or overheated is considered defective and must be replaced.

4. Size and install gel-filled insulating splice covers according to manufacturer's specifications when used in place of heat shrink tubing.

5. Wire nuts with factory applied waterproof sealant may be used for 8 AWG or smaller conductors in above ground junction boxes, but not in pole bases or ground boxes. Install wire nuts in an upright position to prevent the accumulation of water.

6. Support conductors in illumination poles with a J-hook at the top of the pole.

7. When terminating conductors, remove the insulation and jacketing material without nicking the individual strands of the conductor. Conductors with nicked individual conductor strands or removed strands will be considered damaged.

8. Replace conductors and cables that are damaged or that fail an insulation resistance test at no additional cost to the Department.

9. Do not repair damaged conductors with duct tape, electrical tape, or wire nuts. Use only approved splicing methods.

B. CONSTRUCTION METHODS (CONTINUED)

10. Do not terminate more than one conductor under a single lug unless it is rated for multiple conductors. Do not exceed the lug's listing for maximum number and size of conductors allowed.

11. Follow manufacturer's instructions when terminating conductors to breakaway connectors. Properly torque threaded connections. Proper terminations are critical to the safe operation of breakaway devices. Trim waterproofing boots on breakaway connectors to fit snugly around the conductor to ensure a waterproof connection. Only one conductor may enter a single opening in a boot. Provide waterproof boots with the correct number of openings. Leave unused openings factory sealed. Use prequalified breakaway connectors as shown on the MPL.

12. Provide and install a separate stranded equipment grounding conductor (EGC) in all conduits that contain circuit wiring of 50 volts or more. Unless shown elsewhere, size the EGC to be the same size as the largest current carrying conductor in the conduit. Bond all EGCs together at every accessible location. For ITS installations, bond and ground metal ground box covers and other metal equipment as shown on ITS standards.

C. TEMPORARY WIRING

1. Install temporary conductors and electrical equipment in accordance with the NEC article "Temporary Installations" and Department standard sheets.

2. Provide a ground fault circuit interrupter (GFCI) for powering portable electrical equipment, power tools, ice machines, ice storage bins and refrigerators located outdoors at grade. GFCI may be any one of the following: molded cord and plug set, receptacle, or circuit breaker type.

3. Use listed wire nuts with factory applied sealant for temporary wiring where approved.

4. Enclose conductor splices within a listed enclosure or ground box, or ensure the splices are more than 10 ft. above grade vertically and more than 5 ft. horizontally from any metal structure. When installing temporary conductors in areas subject to vehicle traffic or mobile construction equipment, ensure the vertical clearance to ground is at least 18 ft. when measured at the lowest point. Ground messenger wires that support power conductors in conformance with the NEC.

5. Protect and when necessary repair any existing electrical conduits uncovered during the construction process in a timely manner and in conformance with the NEC.

GROUND RODS & GROUNDING ELECTRODES

A. MATERIAL INFORMATION

1. Provide and install a grounding electrode at electrical services. Provide ground rods according to DMS-11040 and the plans. Larger diameter or longer length rods may be called for in some locations. Concrete encased grounding electrodes may be called for in some locations including electrical services — see plan sheets.

B. CONSTRUCTION METHODS

1. Furnish and install ground rods in soil, concrete, or both, as called for in the plans. For ground rods installed in concrete, ensure the connection of the conductor to the ground rod is readily accessible for inspection or repairs. For ground rods installed in soil, ensure that the upper end is between 2 to 4 in. below finished grade.

2. Do not place ground rods in the same drilled hole as a timber or concrete pole.

3. Install ground rods so the imprinted part number is at the upper end of the rod.

4. Remove all non-conductive material such as concrete splatter from the rod at the clamp location.

5. Route all conductors as short and straight as possible for connection to lightning protection ground rods. When a bend is required, ensure a minimum radius bend of 4 in.

6. Unless otherwise called for in the plans, protect grounding electrode conductors with non-metallic conduit. When protecting grounding electrode conductors with metal conduit, provide and install a grounding bushing and properly sized bonding jumper on each end of the metal conduit.

7. Written authorization is required before installing a ground rod in a horizontal trench for rocky soil or a solid rock bottom.

COMPRESSION SPLICE
OPTION 1

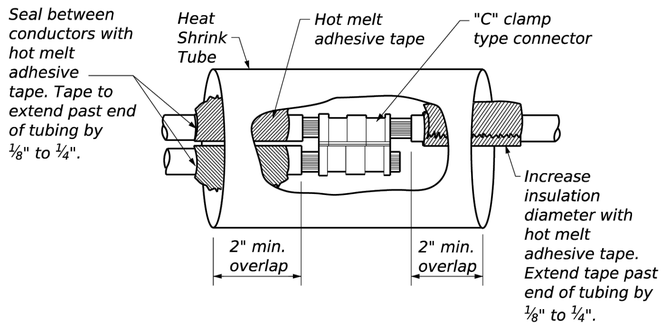

SPLIT BOLT SPLICE
OPTION 2

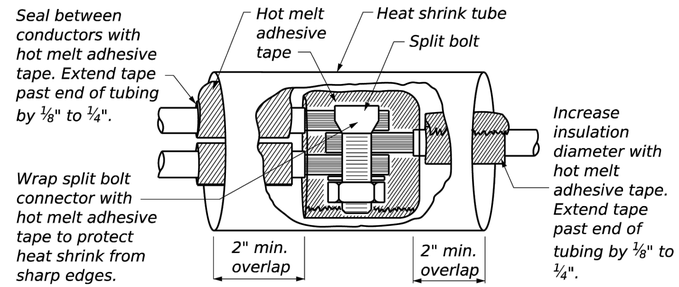

GEL-FILLED INSULATED SPLICE
OPTION 3

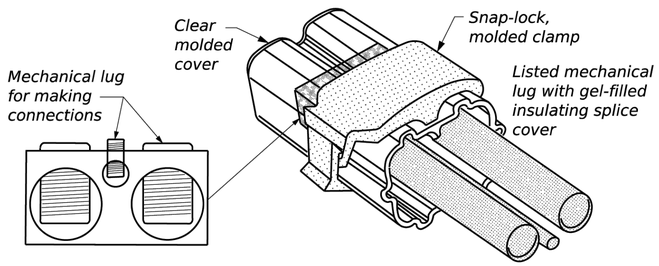

Texas Department of Transportation

Traffic Safety Division Standard

ELECTRICAL DETAILS CONDUCTORS

ED(3)-25

FILE: ed3-25.dgn	DN: TxDOT	CK: TxDOT	DW: TxDOT	CK: TxDOT
© TxDOT April 2025	CONT	SECT	JOB	HIGHWAY
REVISIONS				
1-92 12-00 10-14 10-93 3-03 4-25 4-98 5-03	DIST	COUNTY		SHEET NO.
				103

71C

DISCLAIMER:
The use of this standard is governed by the "Texas Engineering Practice Act". No warranty of any kind is made by TxDOT for any purpose whatsoever. TxDOT assumes no responsibility for the conversion of this standard to other formats or for incorrect results or damages resulting from its use.

DATE:
FILE:

APRON FOR GROUND BOX

PLAN VIEW

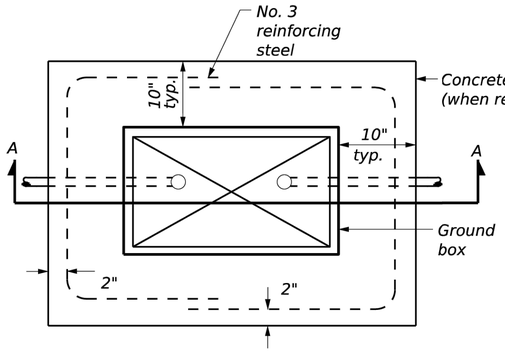

SECTION A - A

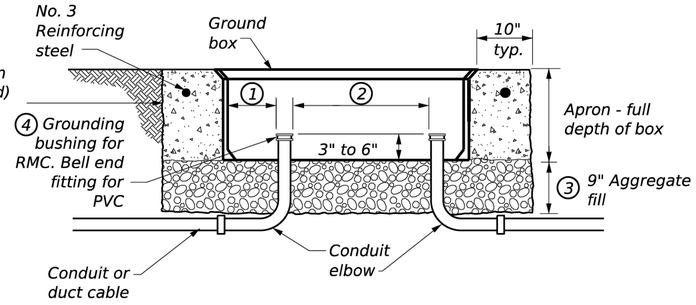

SECTION A - A NOTES:

1. *Uniformly space ends of conduits within the ground box. Position ends of conduits so that ground box walls do not interfere with the installation of grounding bushings or bell end fittings.*
2. *Maintain sufficient space between conduits to allow for proper installation of bushing.*
3. *Place aggregate under the box, not in the box. Aggregate should not encroach on the interior volume of the box.*
4. *Install a grounding bushing on the upper end of all RMC terminating in a ground box. Ground RMC elbows when any part of the elbow is less than 18 in. below the bottom of the ground box. Install a PVC bushing or bell end fitting on the upper end of all PVC conduits terminating in a ground box.*

GROUND BOXES	
TYPE	OUTSIDE DIMENSIONS (Width x Length X Depth)
A	12" X 23" X 11"
B	12" X 23" X 22"
C	16" X 29" X 11"
D	16" X 29" X 22"
E	12" X 23" X 17"

NOTES:

A. MATERIALS

1. *Provide polymer concrete ground boxes measuring 16 in. x 30 in. x 24 in. (W x L x D) or smaller in accordance with Departmental Material Specification DMS-11070, "Ground Boxes" and Item 624, "Ground Boxes."*
2. *Provide Type A, B, C, D, and E ground boxes as shown in the plans and as listed on the Material Producers List (MPL) on the Department web site under "Roadway Illumination and Electrical Supplies," Item 624.*
3. *Ensure ground box cover is correctly labeled in accordance with DMS-11070.*
4. *Provide larger ground boxes in accordance with Item 624 and as shown in the plans.*

B. CONSTRUCTION METHODS

1. *Before setting ground box and after placing and capping conduits, lay an aggregate bed a minimum of 9 in. deep that extends 10 in. beyond the sides of the ground box. Provide coarse aggregate sized 3/4 in. to 2 in., with no more than 20% material passing through a no. 8 sieve, and as defined by the current ASTM C33/33M standard. Clean aggregate and dirt from conduits according to Item 618.*
2. *Cast ground box aprons in place. Reinforcing steel may be field bent. Ensure the depth of concrete for the apron extends from finished grade to the top of the aggregate bed under the box. Ground box aprons, including concrete and reinforcing steel, are subsidiary to ground boxes when called for by descriptive code.*
3. *Keep bolt holes in the box clear of dirt. Bolt covers down when not working in ground boxes.*
4. *Install all conduits and elbows in a professional and skillful manner. Uniformly space conduits so grounding bushings and bell end fittings can easily be installed.*
5. *Temporarily seal all conduits in the ground box until conductors are installed.*
6. *Permanently seal conduits immediately after the completion of conductor installation. Permanently seal the ends of all conduits with duct seal, expandable foam, or other method as approved. Do not use duct tape as a permanent conduit seal. Do not use silicone caulk as a sealant.*
7. *Bond all equipment grounding conductors in a ground box together with listed connectors.*
8. *When a Type B or D ground box is stacked to meet volume requirements, an appropriately sized hole may be cut for conduit entry in the side wall at least 18 in. below grade.*
9. *If an existing ground box in the contract has a metal cover, bond the cover to the equipment grounding conductor with a 3 ft. long stranded bonding jumper that is the same size as the grounding conductor. The bonding jumper is subsidiary to various bid items. Verify existing ground boxes with metal covers are shown on the plans, with notes fully describing the work required.*
10. *If other ground boxes with metal covers are within the project limits but are not part of the contract, the Engineer may direct the Contractor to bond the metal covers, identifying the specific boxes in writing. This work will be paid for separately.*
11. *Bond metal ground box covers to the grounding conductor with a tank ground type lug.*

GROUND BOX COVERS								
TYPE	DIMENSIONS							
	H	I	J	K	L	M	N	P
A, B & E	23 ¼"	23"	13 ¾"	13 ½"	9 ⅞"	5 ⅛"	1 ⅜"	2"
C & D	30 ½"	30 ¼"	17 ½"	17 ¼"	13 ¼"	6 ¾"	1 ⅜"	2"

GROUND BOX COVER

PLAN VIEW

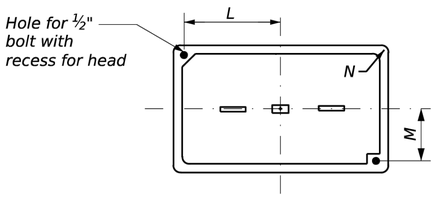

END

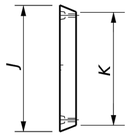

SIDE

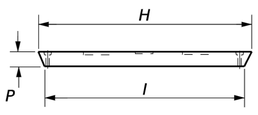

Texas Department of Transportation

Traffic Safety Division Standard

ELECTRICAL DETAILS GROUND BOXES

ED(4)-25

FILE: ed4-25.dgn	DN: TxDOT	CK: TxDOT	DW: TxDOT	CK: TxDOT
©TxDOT April 2025	CONT	SECT	JOB	HIGHWAY
REVISIONS 1-92 3-03 4-25 4-98 5-03 12-00 10-14	DIST	COUNTY		SHEET NO. 104

71D

DISCLAIMER:
The use of this standard is governed by the "Texas Engineering Practice Act". No warranty of any kind is made by TxDOT for any purpose whatsoever. TxDOT assumes no responsibility for the conversion of this standard to other formats or for incorrect results or damages resulting from its use.

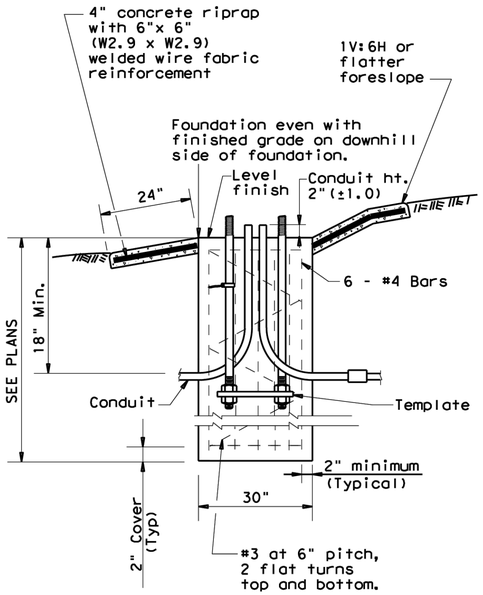

SECTION A-A
SHOWING SLOPED GRADE

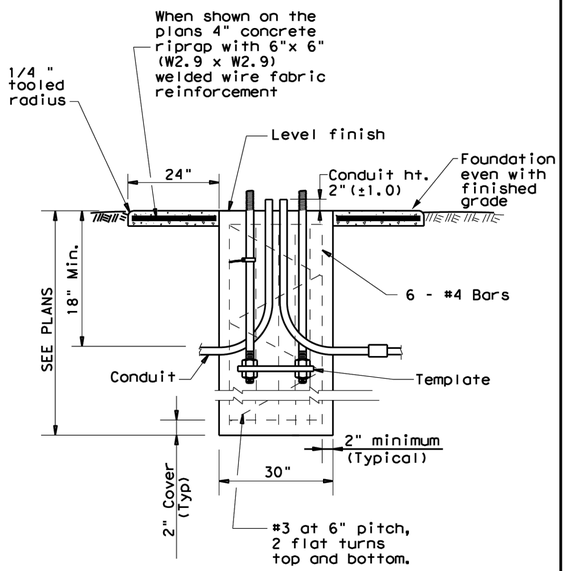

SECTION A-A
SHOWING CONSTANT GRADE

TABLE 1

ANCHOR BOLTS

POLE MOUNTING HEIGHT	BOLT CIRCLE		ANCHOR BOLT SIZE
	Shoe Base	T-Base	
<40 ft.	13 in.	14 in.	1in.x 30in.
40-50 ft.	15 in.	17 ¼in.	1 ¼in. x 30in.

TABLE 2

RECOMMENDED FOUNDATION LENGTHS
(See note 1)

MOUNTING HEIGHT	TEXAS CONE PENETROMETER N Blows/ft		
	10	15	40
≤20 ft.	6′	6′	6′
>20 ft. to 30 ft.	8′	6′	6′
>30 ft. to 40 ft.	8′	8′	6′
>40 ft. to 50 ft.	10′	8′	6′

TABLE 3

PAY QUANTITY OF RIPRAP PER FOUNDATION (Install only when shown on the plans)

Foundation Diameter	RIPRAP DIAMETER	RIPRAP (CONC) (CL B)
30 in.	78 in.	0.35 CY

GENERAL NOTES:

1. "Recommended Foundation Lengths" table is for information purposes only. Foundation lengths shall be as shown on the plans, or as directed by the Engineer. Foundations will be paid for under Item 416, "Drilled Shaft Foundations," unless otherwise shown on the plans.
2. Erect roadway illumination assembly poles plumb and true. Form and level the top 6" of the foundation so the pole will be plumb. Use leveling nuts to plumb shoe base poles. Do not use shims or leveling nuts under transformer bases. Do not grout between baseplate and the foundation.
3. Ensure Class 2A and 2B fit for anchor bolts and nuts. Tap and chase nuts after galvanizing. Anchor bolt body with rolled threads need not be full size.
4. Use appropriate class of concrete as specified in Items 416 and 432. Concrete for riprap may be upgraded to Class C at no extra cost to the Department.
5. Place riprap around the foundation when called for elsewhere in the plans. Riprap will be paid for under Item 432.
6. Locate breakaway roadway illumination assemblies as shown in the placement table, unless otherwise dimensioned on the plans. Protect non-breakaway illumination assemblies from vehicular impact (i.e. 2.5 ft. behind guard rail or mounted on traffic barrier), or located outside the clear zone, except that 2.5 ft. from curb face is minimum desired for light poles on city streets, 45 mph or less. See Roadway Design Manual for further information.
7. Use 4 hold down and 4 connecting washers on transformer base poles as recommended by the manufacturer and supplied with base.
8. Install a minimum of 2 conduits in each foundation. See lighting layout sheets for locations of foundations with more than 2 conduits. Cap unused conduits in foundations on both ends.
9. Conduit location in foundations is critical for breakaway devices. Place conduits 2 in. apart on centerline as shown.
10. Bond anchor bolt to rebar cage with #6 bare stranded copper conductor. Use listed mechanical connectors rated for embedment in concrete. The bonded steel in the foundation creates a concrete encased grounding electrode which replaces the ground rod.
11. Grade earthwork around T-base foundations even with the finished grade as shown in Section A-A to ensure proper function of the breakaway device. Use riprap on T-base foundations that are located on sloped grades, and as shown on the plans for level grades.

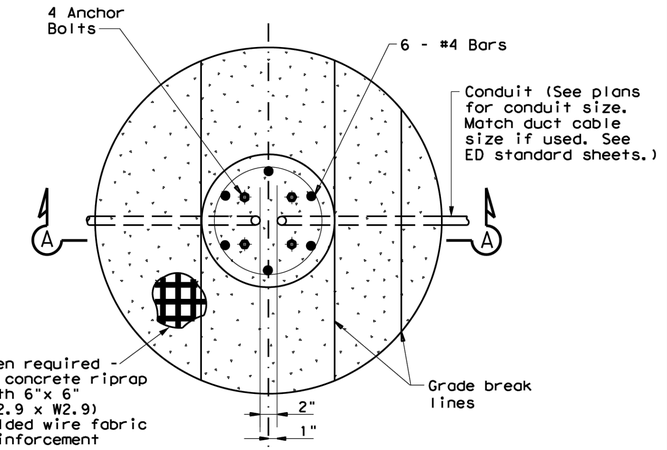

FOUNDATION DETAIL

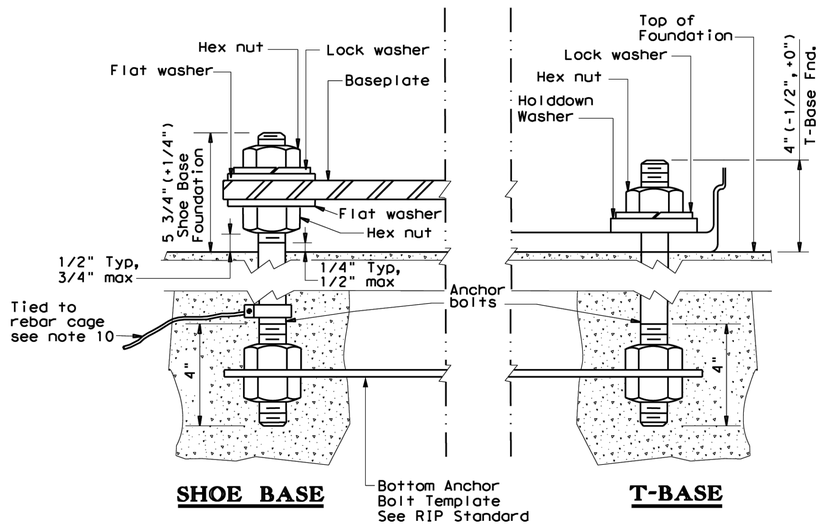

ANCHOR BOLT DETAIL

TABLE 4

BREAKAWAY POLE PLACEMENT (See note 6)

ROADWAY FUNCTIONAL CLASSIFICATION	** POLE OFFSET (DISTANCE TO FACE OF TRANSFORMER BASE)
Freeway Mainlanes (roadway with full control of access)	15 ft. (minimum and typical) from lane edge
All curbed, 45 mph or less design speed	2.5 ft. minimum (15 ft. desirable) from curb face
All others	10 ft. minimum*(15 ft. desirable) from lane edge

* or as close to ROW line as is practical

** provide 2/5 of the luminaire mounting height behind the pole for "falling area" to prevent encroachment on the other travel lanes. See design guidelines.

Texas Department of Transportation

Traffic Safety Division Standard

ROADWAY ILLUMINATION DETAILS
(RDWY ILLUM FOUNDATIONS)
RID(2)-20

FILE: rid2-20.dgn	DN:	CK:	DW:	CK:
© TxDOT January 2007	CONT	SECT	JOB	HIGHWAY
REVISIONS				
1-11	DIST	COUNTY		SHEET NO.
7-17				105
12-20				

728

DATE:
FILE:

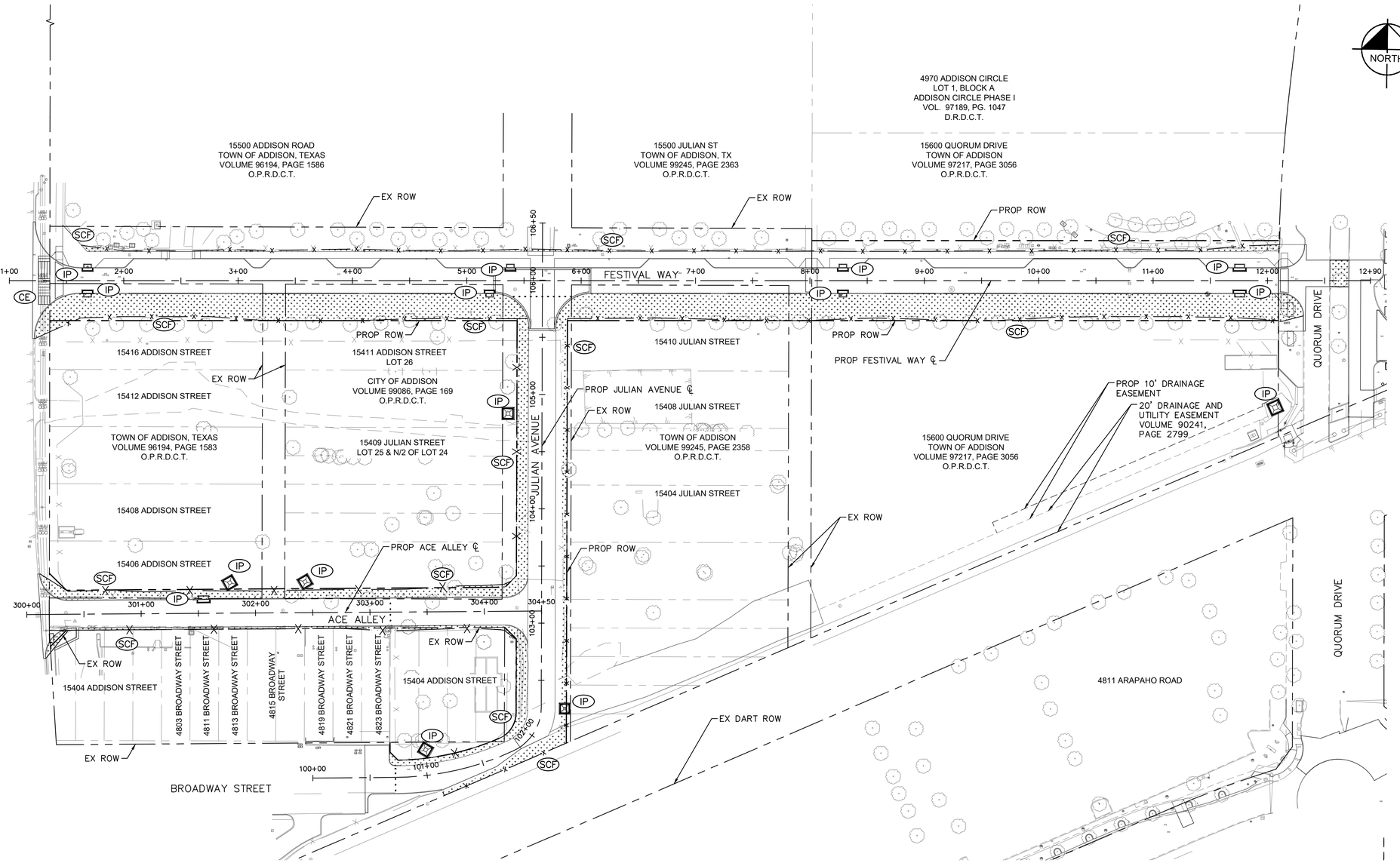

LEGEND

SCF	SEDIMENT CONTROL FENCE
IP	INLET PROTECTION
	SOD WITH 4" TOPSOIL
CE	STABILIZED CONSTRUCTION ENTRANCE/EXIT

EROSION CONTROL NOTES

1. EROSION CONTROL DEVICES AS SHOWN ON THE EROSION CONTROL PLAN FOR THE PROJECT SHALL BE INSTALLED PRIOR TO THE START OF LAND DISTURBING ACTIVITIES ON THE PROJECT.
2. ALL EROSION CONTROL DEVICES ARE TO BE INSTALLED DURING SITE PREP IN ACCORDANCE WITH THE APPROVED PLANS AND SPECIFICATIONS FOR THE PROJECT.
3. CONTRACTOR SHALL MINIMIZE THE REMOVAL OF GRASS COVER UNTIL ACTUAL WORK PHASE BEGINS.
4. IF THE EROSION CONTROL PLAN AS APPROVED CANNOT CONTROL EROSION AND OFF-SITE SEDIMENTATION FROM THE PROJECT THE EROSION CONTROL PLAN WILL BE REQUIRED TO BE REVISED AND/OR ADDITIONAL EROSION CONTROL DEVICES WILL BE REQUIRED (NO SEPARATE PAY).
5. OFF-SITE SOIL BORROW AND SPOIL AREAS ARE CONSIDERED AS PART OF THE PROJECT SITE AND MUST ALSO COMPLY WITH THE EROSION CONTROL REQUIREMENTS FOR THIS PROJECT. THIS INCLUDES THE INSTALLATION OF BMP'S TO CONTROL OFFSITE SEDIMENTATION AND THE ESTABLISHMENT OF PERMANENT GROUND COVER ON DISTURBED AREAS PRIOR TO FINAL APPROVAL OF THE PROJECT.
6. INSPECTIONS SHALL BE MADE WEEKLY AND AFTER RAIN STORM EVENTS TO INSURE THAT THE DEVICES ARE FUNCTIONING PROPERLY.
7. CONTRACTOR SHALL BE RESPONSIBLE FOR IDENTIFYING APPROPRIATE CONSTRUCTION ENTRANCE. WHEN SEDIMENT OR MUD HAS CLOGGED THE VOID SPACES BETWEEN STONES OR MUD IS BEING TRACKED ONTO A PUBLIC ROADWAY, THE STABILIZED CONSTRUCTION ENTRANCE AGGREGATE PAD MUST BE WASHED DOWN OR REPLACED. RUNOFF FROM THE WASHDOWN OPERATION SHALL NOT BE ALLOWED TO DRAIN DIRECTLY OFF SITE WITHOUT FIRST FLOWING THROUGH ANOTHER BMP TO CONTROL OFF SITE SEDIMENTATION. PERIODIC RE-GRADING OR THE ADDITION OF NEW STONE MAY BE REQUIRED TO MAINTAIN THE EFFICIENCY OF THE INSTALLATION.
8. CONTRACTOR SHALL BE RESPONSIBLE FOR SUBMITTAL OF N.O.I., N.O.T. AND ANY ADDITIONAL INFORMATION REQUIRED BY THE E.P.A. CONTRACTOR SHALL COMPLY WITH ALL E.P.A. STORMWATER POLLUTION PREVENTION REQUIREMENTS.
9. PRIOR TO FINAL ACCEPTANCE AND/OR OPENING ROADWAY TO TRAFFIC, ALL DISTURBED AREAS SHALL BE STABILIZED AND EROSION CONTROL DEVICES SHALL BE REMOVED.
10. SEE GENERAL NOTES SHEET FOR EROSION CONTROL REQUIREMENTS.

Know what's **below.**
Call before you dig.

No.	REVISIONS	DATE	BY

PROJECT NO. C00057/ BID NO. 27-31

Kimley»Horn
225 E. JOHN W. CARPENTER FREEWAY SUITE 1100
IRVING, TX 75062
PHONE: 214-369-2100
WWW.KIMLEY-HORN.COM

© 2026 KIMLEY-HORN AND ASSOCIATES, INC.
TEXAS REGISTERED ENGINEERING FIRM #F-928

11/06/2026

STATE OF TEXAS
L. NATHAN ANTE
96866
LICENSED
PROFESSIONAL ENGINEER
L. Nathan Ante

KHA PROJECT 063543066	DATE 11/06/2026	SCALE AS SHOWN	DESIGNED BY KCH	DRAWN BY ZMZ	CHECKED BY FLS

ADDISON
ADDISON JUNCTION PUBLIC INFRASTRUCTURE IMPROVEMENTS

EROSION CONTROL BEGIN TO END

SHEET NUMBER
106

Richard B. Mooney, Jr. - November 06, 2026 - 01:36:22pm - C:\ACCUACD\Kimley-Horn\063543066-ADDISON JUNCTION PUBLIC\Project Files\CADD\Pro-Sheets\EROSION CONTROL - BEGIN TO END.dwg
This document, together with the concepts and designs presented herein, as an instrument of service, is intended only for the specific purpose and client for which it was prepared. Reuse of and improper reliance on this document without written authorization and adaptation by Kimley-Horn and Associates, Inc. shall be without liability to Kimley-Horn and Associates, Inc.

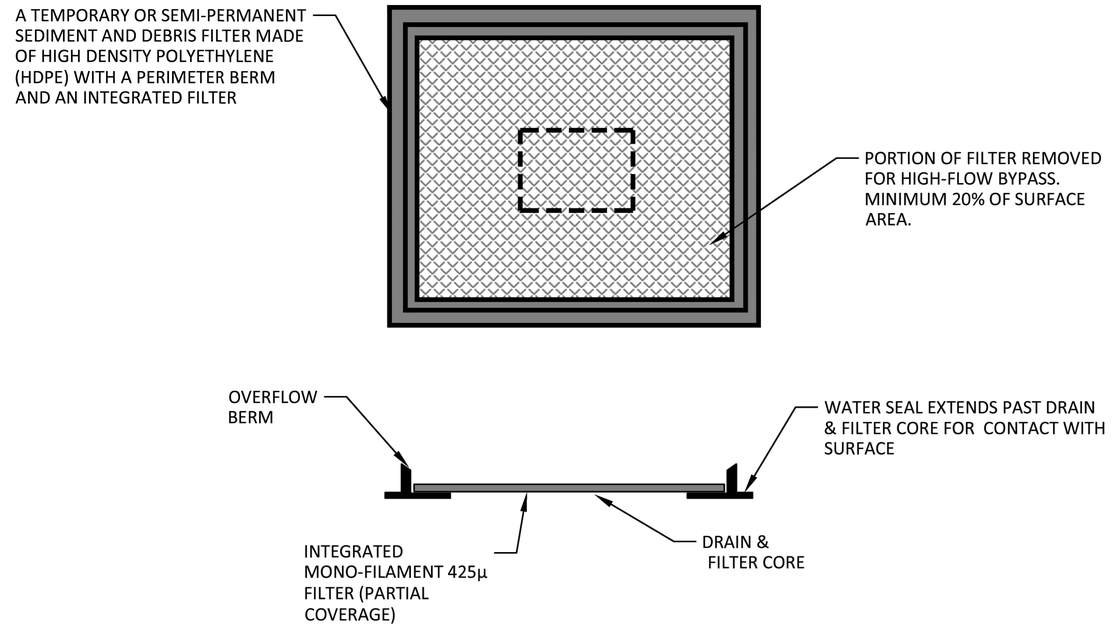

NOTES:

1. DO NOT REMOVE GRATE. LAY INLET PROTECTION ON TOP OF GRATE. INLET PROTECTION SHALL EXTEND AT LEAST 3 INCHES BEYOND GRATE FRAME IN EACH DIRECTION.
2. ALLOWABLE ANCHOR METHODS:
   - 2.1. ATTACH WITH 16-GAUGE TIE WIRE. AT EACH CORNER OF INLET PROTECTION, FEED ONE END OF WIRE DOWN THRU INLET PROTECTION, AROUND GRATE BAR, AND BACK-UP THRU INLET PROTECTION. ABOVE GROUND, PULL TIGHT AND TWIST WIRES SEVERAL TIMES. CUT OFF EXCESS (FIG. 1).
   - 2.2. PLACE SMALL SNAKE BAGS OR EQUIVALENT (GRAVEL BAGS) CONTAINING CLEAN, PEA-SIZED GRADED GRAVEL AROUND PERIMETER OF INLET PROTECTION (FIG.2)
   - 2.3. PLACE TRAFFIC CONE ON TOP OF INLET PROTECTION (FIG. 3). FOR BETTER PERFORMANCE AND DURABILITY INSTALL WITH ADHESIVE CAULK. THIS ADHESIVE SHOULD PEEL OFF EASILY WHEN INLET PROTECTION IS REMOVED.

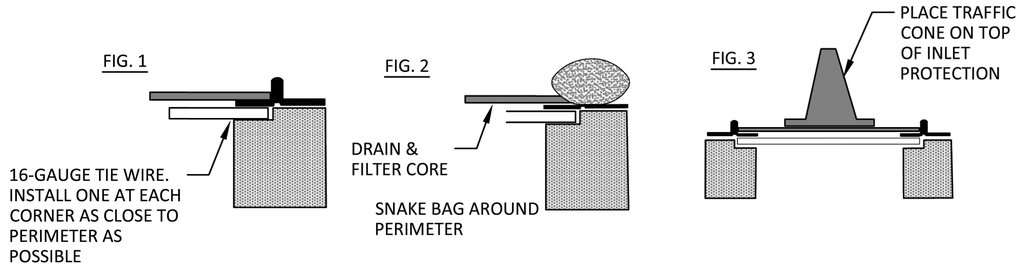

GRATE INLET PROTECTION (IN PAVED AREAS)

ADDISON PUBLIC WORKS & ENGINEERING SERVICES	GRATE INLET PROTECTION (IN PAVED AREAS)	STANDARD CONSTRUCTION DETAILS EROSION CONTROL		
		DATE: JANUARY 2022	REV DATE: -	SHEET: SD-EC01

PROJECT NO. C00057/ BID NO. 27-31

No.	REVISIONS	DATE	BY

Kimley»Horn
225 E. JOHN W. CARPENTER FREEWAY SUITE 1100
IRVING, TX 75063
PHONE: 214-420-5600
WWW.KIMLEY-HORN.COM
© 2026 KIMLEY-HORN AND ASSOCIATES, INC.
TEXAS REGISTERED ENGINEERING FIRM #F-928

11/06/2026

STATE OF TEXAS
L. NATHAN ANTE
96866
LICENSED
PROFESSIONAL ENGINEER

KHA PROJECT 063543066	DATE 11/06/2026	SCALE AS SHOWN	DESIGNED BY KCH
		DRAWN BY ZMZ	CHECKED BY FLS

ADDISON
ADDISON JUNCTION PUBLIC INFRASTRUCTURE IMPROVEMENTS

EROSION CONTROL STANDARD DETAILS

SHEET NUMBER
107

Plotted By: Zanetti, Zach - November 06, 2026 - 02:30:52pm C:\ACC\ACCDocs\Kimley-Horn\08354306-ADDISON JUNCTION PUBLIC\Project Files\CADD\PlanSheets\CITY DETAILS.dwg
This document, together with the concepts and designs presented herein, as an instrument of service, is intended only for the specific purpose and client for which it was prepared. Reuse of and improper reliance on this document without written authorization and adaptation by Kimley-Horn and Associates, Inc. shall be without liability to Kimley-Horn and Associates, Inc.

DISCLAIMER:
The use of this standard is governed by the "Texas Engineering Practice Act". No warranty of any kind is made by TxDOT for any purpose whatsoever. TxDOT assumes no responsibility for the conversion of this standard to other formats or for incorrect results or damages resulting from its use.

DATE
FILE

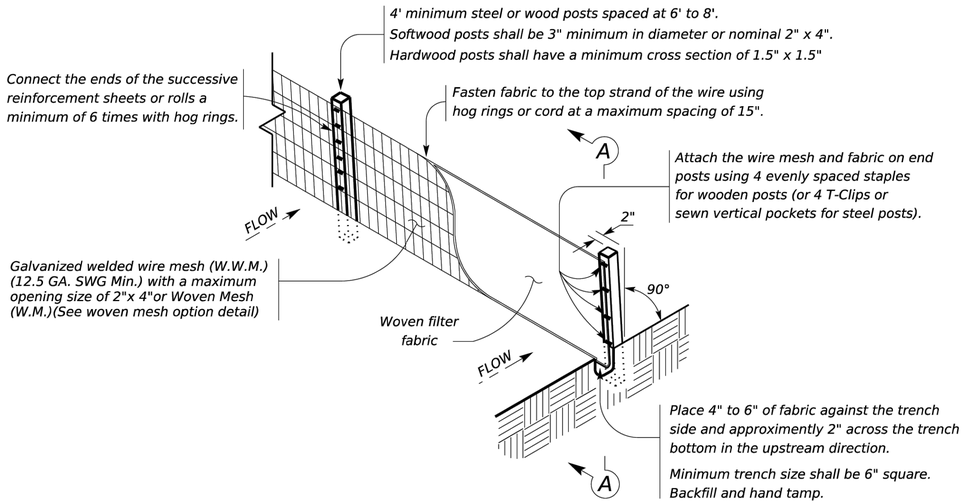

TEMPORARY SEDIMENT CONTROL FENCE

SCF

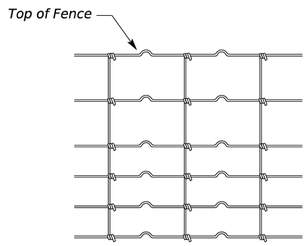

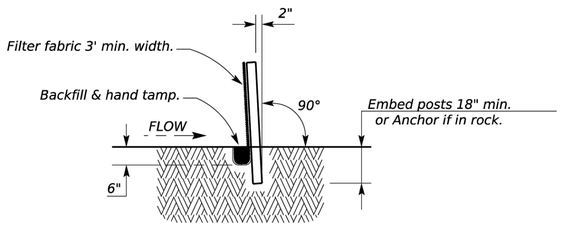

SECTION A-A

HINGE JOINT KNOT WOVEN MESH (OPTION) DETAIL

Galvanized hinge joint knot woven mesh (12.5 GA.SWG Min.) requires a minimum of five horizontal wires spaced at a maximum of 12 inches apart and all vertical wires spaced at a maximum of 12 inches apart.

SEDIMENT CONTROL FENCE USAGE GUIDELINES

A sediment control fence may be constructed near the downstream perimeter of a disturbed area along a contour to intercept sediment from overland runoff. A 2 year storm frequency may be used to calculate the flow rate to be filtered.

Sediment control fence should be sized to filter a maximum flow through rate of 100 GPM/FT^2. Sediment control fence is not recommended to control erosion from a drainage area larger than 2 acres.

LEGEND

Sediment Control Fence

SCF

GENERAL NOTES

1. *Vertical tracking is required on projects where soil distributing activities have occurred unless otherwise approved.*
2. *Perform vertical tracking on slopes to temporarily stabilize soil.*
3. *Provide equipment with a track undercarriage capable of producing linear soil impressions measuring a minimum of 12" in length by 2" to 4" in width by 1/2" to 2" in depth.*
4. *Do not exceed 12" between track impressions.*
5. *Install continous linear track impressions where the minimum 12" length impressions are perpendicular to the slope or direction of water flow.*

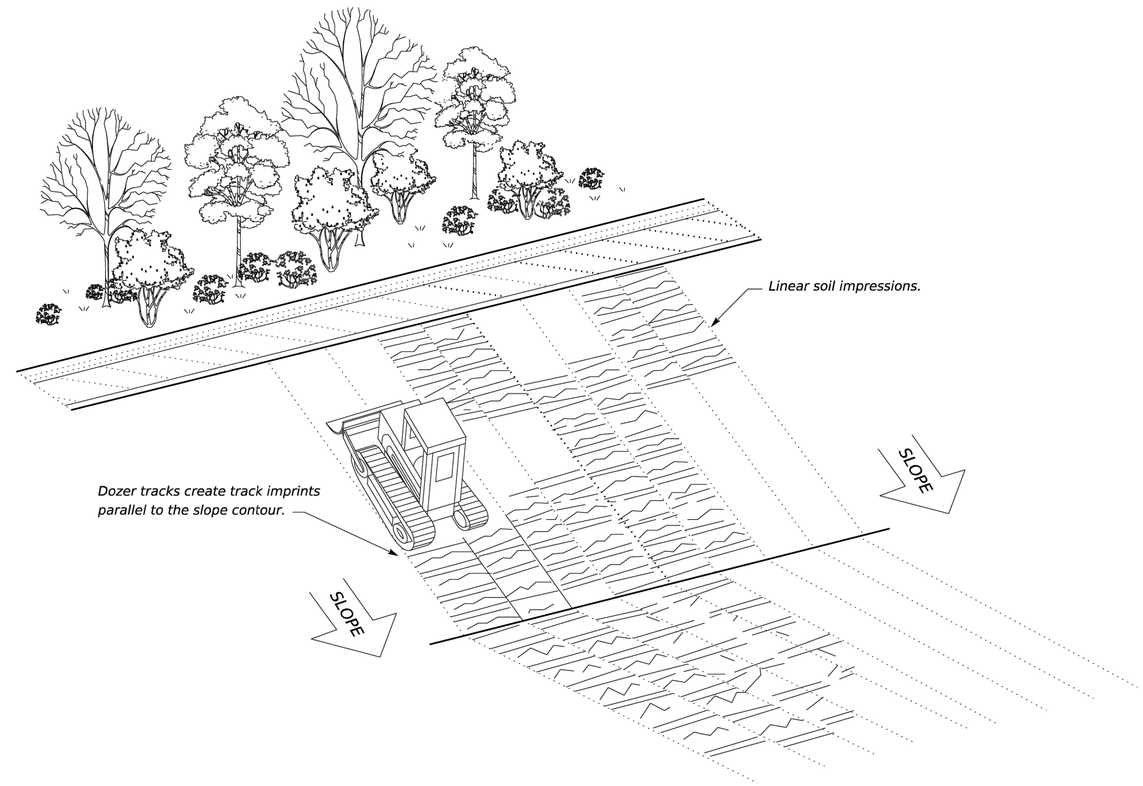

VERTICAL TRACKING

Texas Department of Transportation

Design Division Standard

TEMPORARY EROSION, SEDIMENT AND WATER POLLUTION CONTROL MEASURES

FENCE & VERTICAL TRACKING

EC(1)-16

FILE: ec116	DN: TxDOT	CK: KM	DW: VP	DN/CK: LS		
© TxDOT: JULY 2016	CONT	SECT	JOB		HIGHWAY	
REVISIONS						
	DIST	COUNTY			SHEET NO.	
					108	

DISCLAIMER:
The use of this standard is governed by the "Texas Engineering Practice Act". No warranty of any kind is made by TxDOT for any purpose whatsoever. TxDOT assumes no responsibility for the conversion of this standard to other formats or for incorrect results or damages resulting from its use.

DATE:
FILE:

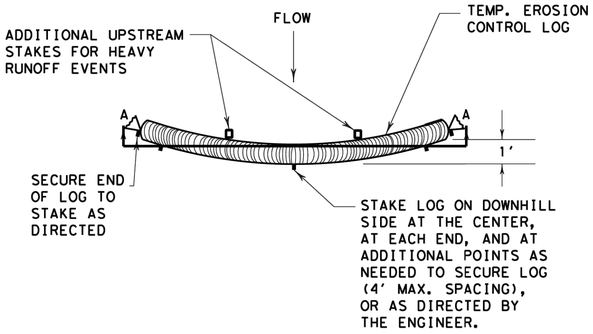

PLAN VIEW

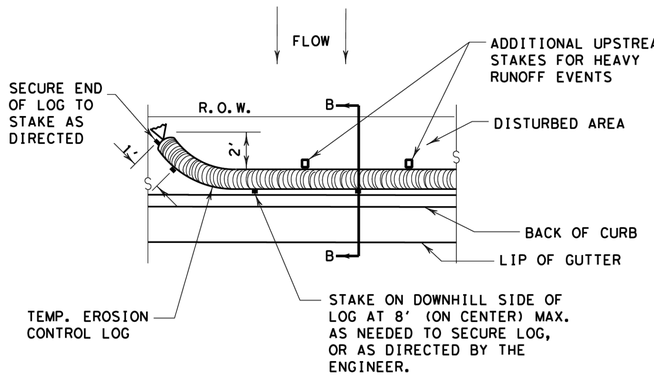

PLAN VIEW

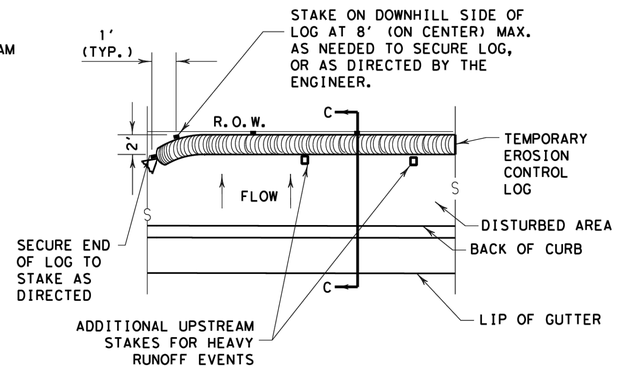

PLAN VIEW

GENERAL NOTES:

1. EROSION CONTROL LOGS SHALL BE INSTALLED IN ACCORDANCE WITH MANFACTURER'S RECOMMENDATIONS, OR AS DIRECTED BY THE ENGINEER.
2. LENGTHS OF EROSION CONTROL LOGS SHALL BE IN ACCORDANCE WITH MANUFACTURER'S RECOMMENDATIONS AND AS REQUIRED FOR THE PURPOSE INTENDED.
3. UNLESS OTHERWISE DIRECTED, USE BIODEGRADABLE OR PHOTODEGRADABLE CONTAINMENT MESH ONLY WHERE LOG WILL REMAIN IN PLACE AS PART OF A VEGETATIVE SYSTEM. FOR TEMPORARY INSTALLATIONS, USE RECYCLABLE CONTAINMENT MESH.
4. FILL LOGS WITH SUFFICIENT FILTER MATERIAL TO ACHIEVE THE MINIMUM COMPACTED DIAMETER SPECIFIED IN THE PLANS WITHOUT EXCESSIVE DEFORMATION.
5. STAKES SHALL BE 2" X 2" WOOD OR #3 REBAR, 2'-4' LONG, EMBEDDED SUCH THAT 2" PROTRUDES ABOVE LOG, OR AS DIRECTED BY THE ENGINEER.
6. DO NOT PLACE STAKES THROUGH CONTAINMENT MESH.
7. COMPOST CRADLE MATERIAL IS INCIDENTAL & WILL NOT BE PAID FOR SEPARATELY.
8. SANDBAGS USED AS ANCHORS SHALL BE PLACED ON TOP OF LOGS & SHALL BE OF SUFFICIENT SIZE TO HOLD LOGS IN PLACE.
9. TURN THE ENDS OF EACH ROW OF LOGS UPSLOPE TO PREVENT RUNOFF FROM FLOWING AROUND THE LOG.
10. FOR HEAVY RUNOFF EVENTS, ADDITIONAL UPSTREAM STAKES MAY BE NECESSARY TO KEEP LOG FROM FOLDING IN ON ITSELF.

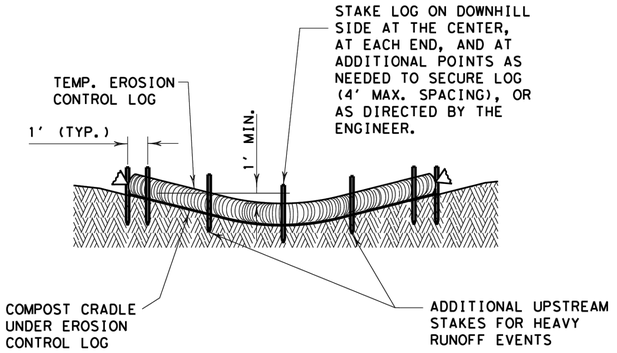

SECTION A-A

EROSION CONTROL LOG DAM

CL-D

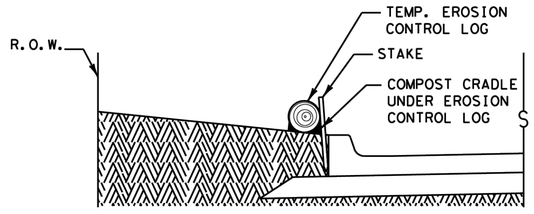

SECTION B-B

EROSION CONTROL LOG AT BACK OF CURB

CL-BOC

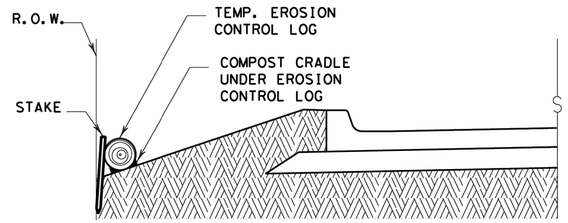

SECTION C-C

EROSION CONTROL LOG AT EDGE OF RIGHT-OF-WAY

CL-ROW

LEGEND

- CL-D — EROSION CONTROL LOG DAM
- CL-BOC — EROSION CONTROL LOG AT BACK OF CURB
- CL-ROW — EROSION CONTROL LOG AT EDGE OF RIGHT-OF-WAY
- CL-SST — EROSION CONTROL LOGS ON SLOPES STAKE AND TRENCHING ANCHORING
- CL-SSL — EROSION CONTROL LOGS ON SLOPES STAKE AND LASHING ANCHORING
- CL-DI — EROSION CONTROL LOG AT DROP INLET
- CL-CI — EROSION CONTROL LOG AT CURB INLET
- CL-GI — EROSION CONTROL LOG AT CURB & GRATE INLET

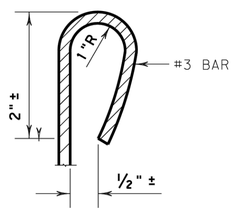

REBAR STAKE DETAIL

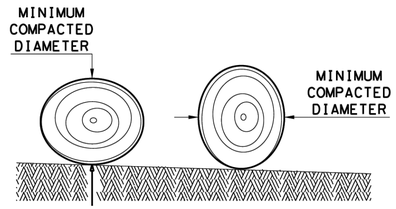

DIAMETER MEASUREMENTS OF EROSION CONTROL LOGS SPECIFIED IN PLANS

SEDIMENT BASIN & TRAP USAGE GUIDELINES

An erosion control log sediment trap may be used to filter sediment out of runoff draining from an unstabilized area.

Log Traps: The drainage area for a sediment trap should not exceed 5 acres. The trap capacity should be 1800 CF/Acre (0.5" over the drainage area).

Control logs should be placed in the following locations:

1. Within drainage ditches spaced as needed or min. 500' on center
2. Immediately preceding ditch inlets or drain inlets
3. Just before the drainage enters a water course
4. Just before the drainage leaves the right of way
5. Just before the drainage leaves the construction limits where drainage flows away from the project.

The logs should be cleaned when the sediment has accumulated to a depth of 1/2 the log diameter.

Cleaning and removal of accumulated sediment deposits is incidental and will not be paid for separately.

Texas Department of Transportation

Design Division Standard

TEMPORARY EROSION, SEDIMENT AND WATER POLLUTION CONTROL MEASURES

EROSION CONTROL LOG

EC(9)-16

FILE: ec916	DN: TxDOT		CK: KM	DW: LS/PT		CK: LS
© TxDOT: JULY 2016	CONT	SECT	JOB		HIGHWAY	
REVISIONS						
	DIST	COUNTY				SHEET NO.
						109

DISCLAIMER:
The use of this standard is governed by the "Texas Engineering Practice Act". No warranty of any kind is made by TxDOT for any purpose whatsoever. TxDOT assumes no responsibility for the conversion of this standard to other formats or for incorrect results or damages resulting from its use.

DATE:
FILE:

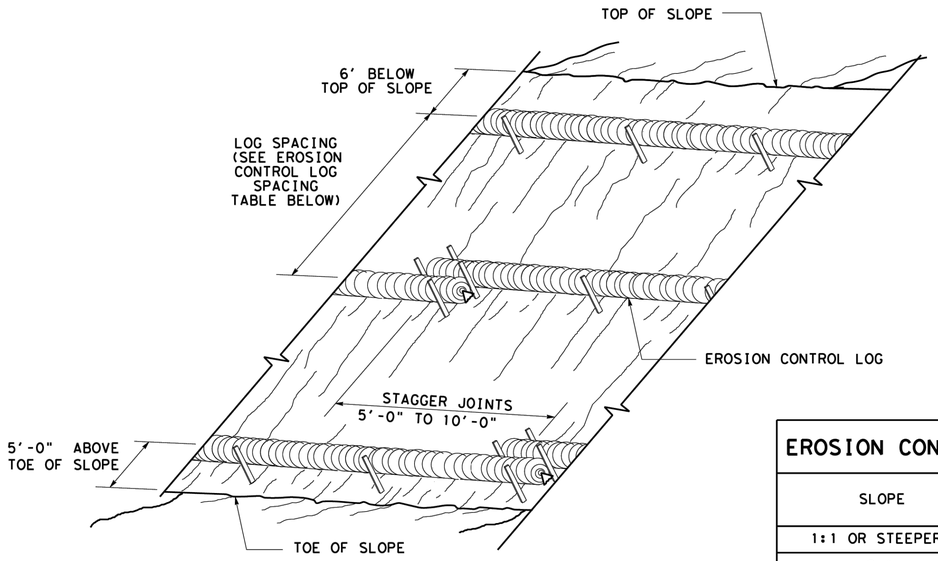

EROSION CONTROL LOGS ON SLOPES
STAKE AND TRENCHING ANCHORING

CL-SST

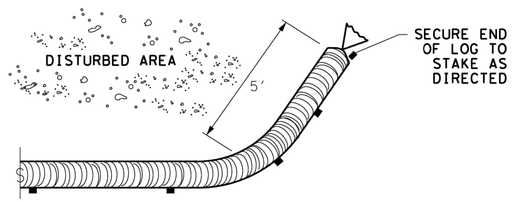

END SECTION RAP DETAIL

EROSION CONTROL LOG SPACING TABLE				
SLOPE	LOG DIAMETER			
	6"	8"	12"	18"
1:1 OR STEEPER	5'	10'	15'	20'
2:1	10'	20'	30'	40'
3:1	15'	30'	45'	60'
4:1 OR FLATTER	20'	40'	60'	80'

* ADJUSTMENTS CAN BE MADE FOR SOIL TYPE:
SOFT, LOAMY SOILS-ADJUST ROWS CLOSER TOGETHER;
HARD, ROCKY SOILS- ADJUST ROWS FARTHER APART

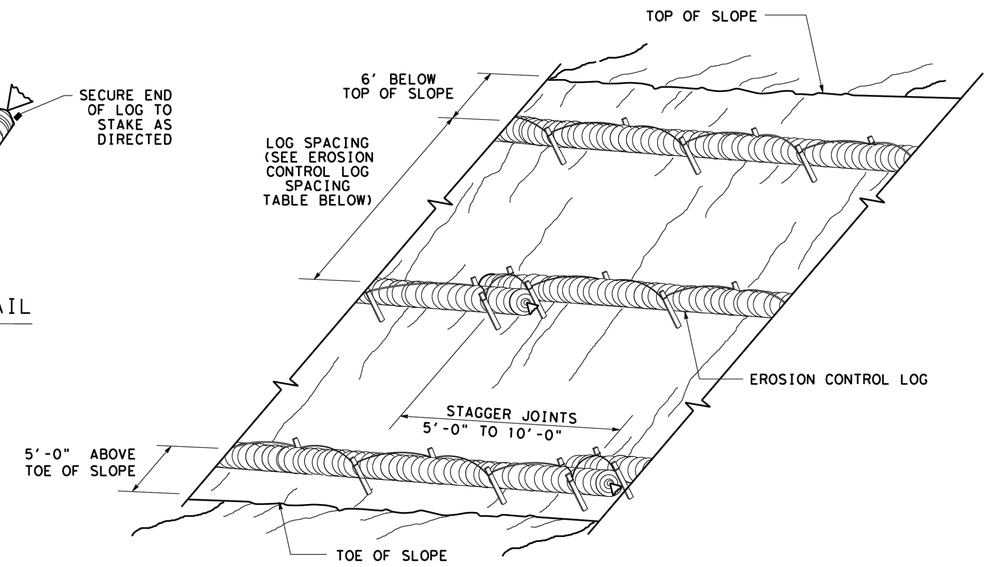

EROSION CONTROL LOGS ON SLOPES
STAKE AND LASHING ANCHORING

CL-SSL

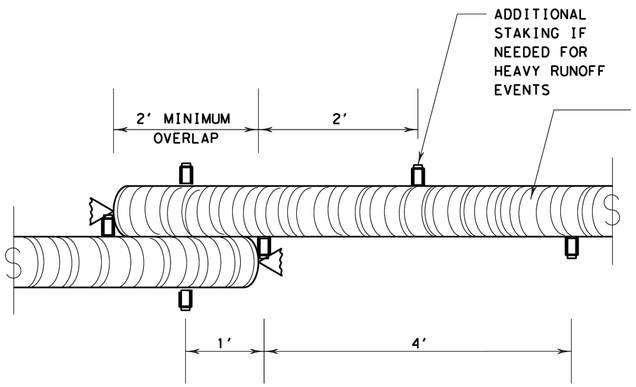

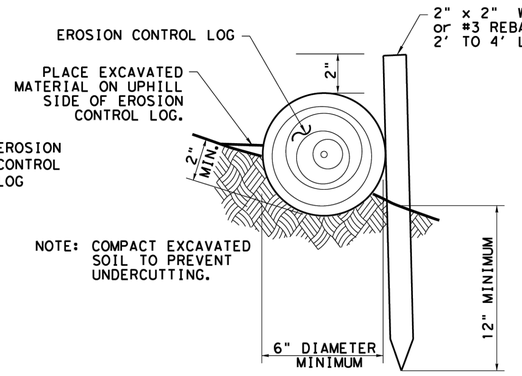

STAKE AND TRENCHING ANCHORING DETAIL

CL-SST

TRENCH DEPTH TABLE	
LOG DIAMETER	DEPTH
6"	2"
8"	3"
12"	4"
18"	5"

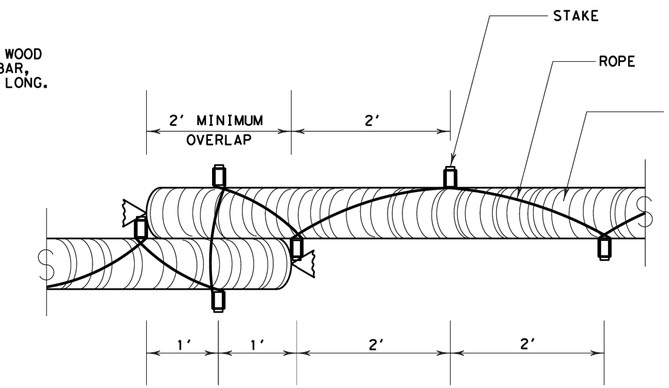

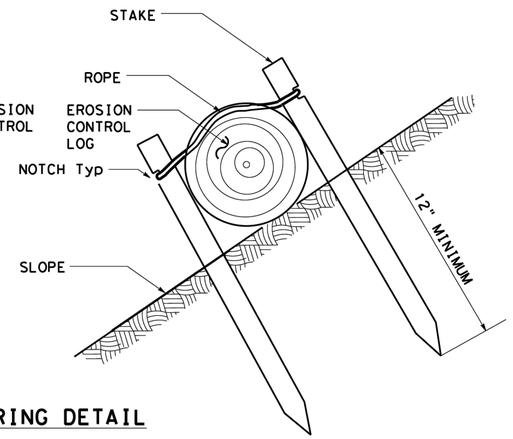

STAKE AND LASHING ANCHORING DETAIL

CL-SSL

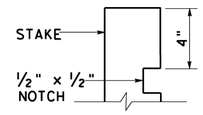

STAKE NOTCH DETAIL

Texas Department of Transportation

Design Division Standard

TEMPORARY EROSION, SEDIMENT AND WATER POLLUTION CONTROL MEASURES
EROSION CONTROL LOG
EC(9)-16

FILE: ec116	DN: TxDOT	CK: KM	DW: LS/PT	CK: LS
© TxDOT: JULY 2016	CONT	SECT	JOB	HIGHWAY
REVISIONS				
	DIST	COUNTY		SHEET NO.
				110

DISCLAIMER:
The use of this standard is governed by the "Texas Engineering Practice Act". No warranty of any kind is made by TxDOT for any purpose whatsoever. TxDOT assumes no responsibility for the conversion of this standard to other formats or for incorrect results or damages resulting from its use.

DATE:
FILE:

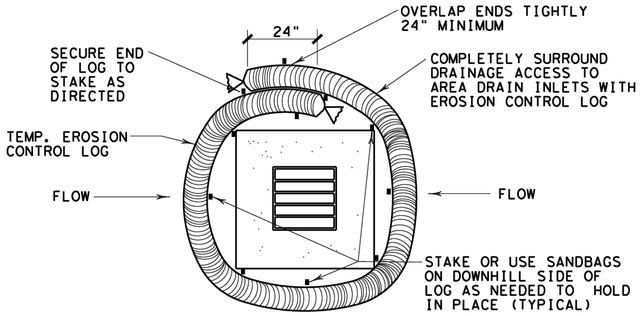

EROSION CONTROL LOG AT DROP INLET

CL-DI

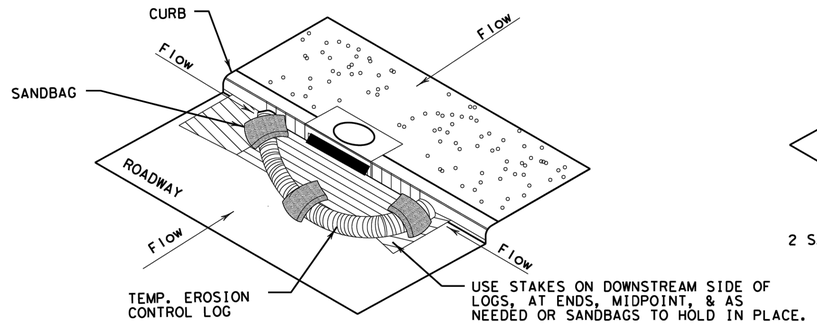

EROSION CONTROL LOG AT CURB INLET

CL-CI

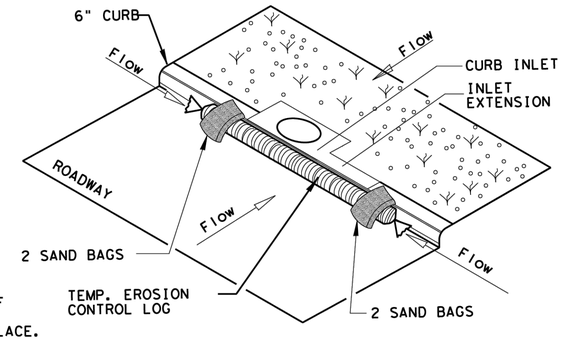

EROSION CONTROL LOG AT CURB INLET

CL-CI

NOTE:
EROSION CONTROL LOGS USED AT CURB INLETS SHOULD ONLY BE USED IF THEY WILL NOT IMPEDE TRAFFIC OR FLOOD THE ROADWAY OR WHEN THE STORM SEWER SYSTEM IS NOT FULLY FUNCTIONAL.

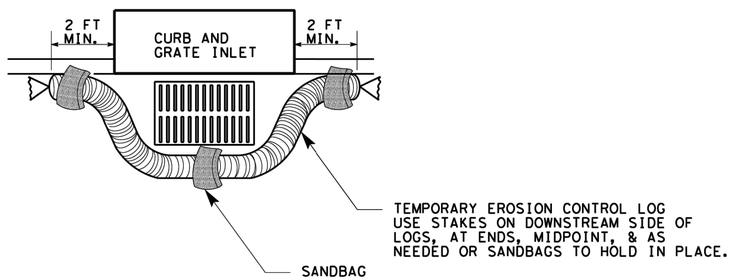

EROSION CONTROL LOG AT CURB & GRADE INLET

CL-GI



SECTION B-B

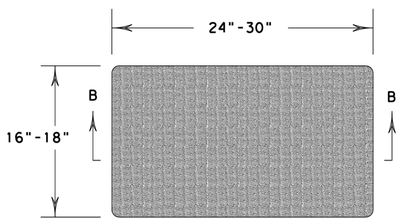

SANDBAG DETAIL

SHEET 3 OF 3

Texas Department of Transportation

Design Division Standard

TEMPORARY EROSION, SEDIMENT AND WATER POLLUTION CONTROL MEASURES

EROSION CONTROL LOG

EC(9)-16

FILE: ec916	DN: TxDOT	CK: KM	DW: LS/PT	CK: LS
© TxDOT: JULY 2016	CONT	SECT	JOB	HIGHWAY
REVISIONS				
	DIST	COUNTY		SHEET NO.
				111

STA: 2+50

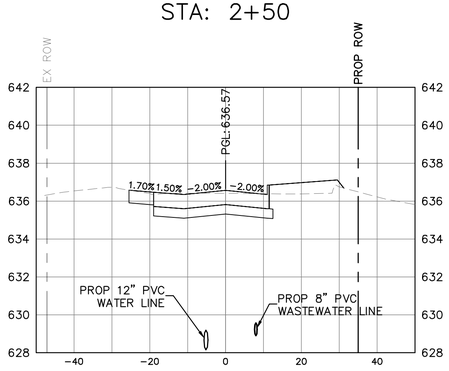

STA: 4+00

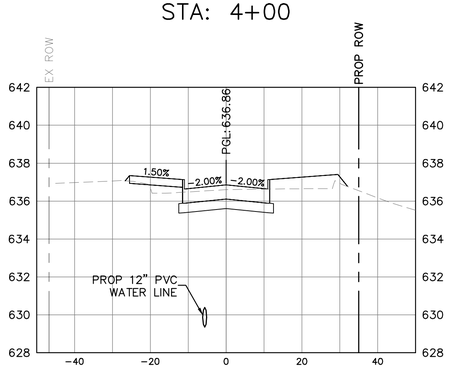

STA: 5+50

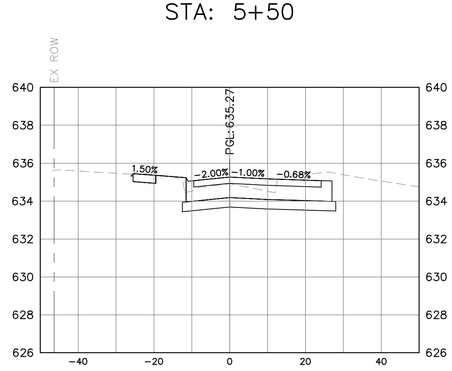

STA: 2+00

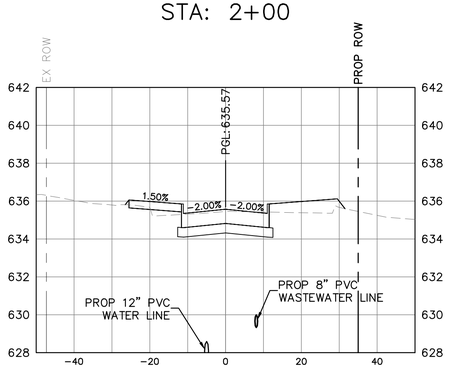

STA: 3+50

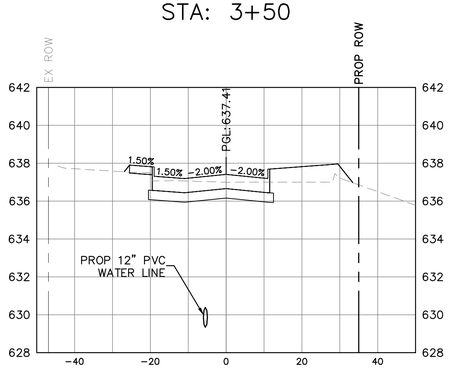

STA: 5+00

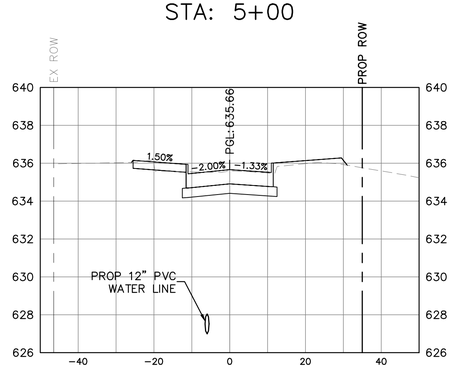

STA: 1+50

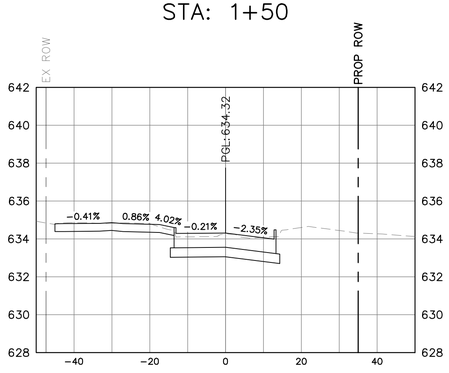

STA: 3+00

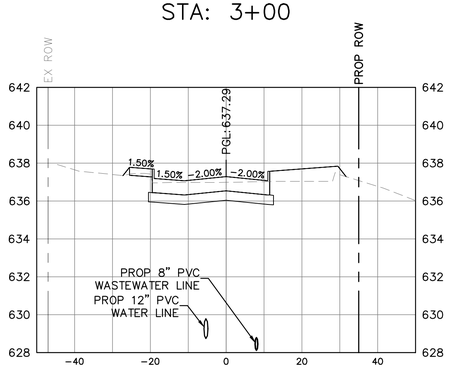

STA: 4+50

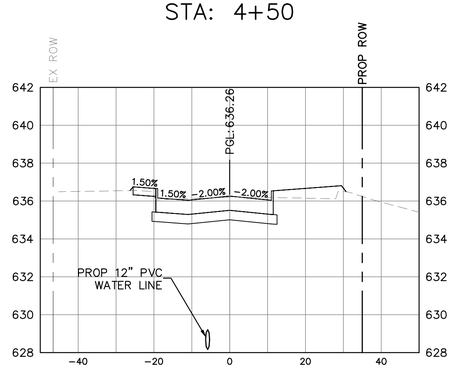

℄ – CENTERLINE
EX – EXISTING
PROP – PROPOSED

ROW – RIGHT OF WAY
PGL – PROFILE GRADE LINE
DE – DRAINAGE EASEMENT

WE – WATER EASEMENT
ELEC –ELECTRIC EASEMENT
BNSF – BNSF RIGHT OF WAY

TCE – TEMPORARY CONSTRUCTION EASEMENT

EXISTING GRADE
PROPOSED GRADE

SCALE:
11" X 17" - H: 1" = 40' V: 1" = 20'

No.	REVISIONS	DATE	BY

PROJECT NO. C000057/ BID NO. 27-31

Kimley»Horn
225 E. JOHN W. CARPENTER FREEWAY SUITE 1100
IRVING, TX 75063
PHONE: 214-369-6500
WWW.KIMLEY-HORN.COM

© 2026 KIMLEY-HORN AND ASSOCIATES, INC.

TEXAS REGISTERED ENGINEERING FIRM #F-928

11/06/2026

STATE OF TEXAS
L. NATHAN ANTE
96866
LICENSED PROFESSIONAL ENGINEER

L. Nathan Ante

KHA PROJECT	063543066
DATE	11/06/2026
SCALE	AS SHOWN
DESIGNED BY	KCH
DRAWN BY	ZMZ
CHECKED BY	FLS

ADDISON
ADDISON JUNCTION PUBLIC INFRASTRUCTURE IMPROVEMENTS

CROSS SECTIONS
FESTIVAL WAY
STA 1+50 TO STA 5+50

SHEET NUMBER
112

Plotted By: Mateos, Joseph November 06, 2026 01:36:34pm D:\ACD\Acad Projects\063543066-ADDISON JUNCTION PUBLIC\Project Files\CAD\Plan Sheets\SECTIONS.dwg
This electronic data was prepared for and intended only for the specific purpose outlined herein. Any use or reliance on this document without written authorization and adaptation by Kimley-Horn and Associates, Inc. shall be without liability to Kimley-Horn and Associates, Inc. The seal appearing on this document was authorized by L. Nathan Ante, 11/06/2026. Kimley-Horn and Associates, Inc. makes no warranties, either expressed or implied, as to any other electronic files or media prepared by and originated by others from which it was prepared. Reliance on any information contained on these electronic files or media shall be at the user's sole risk, and without any liability to Kimley-Horn and Associates, Inc. for any losses or damages resulting therefrom.

Plotted By: Zmetti, Zach November 09, 2026 - 08:08:56am G:\ACS\ACSDocs\Working\06543066-ADDISON JUNCTION PublicCivil\Project Files\CAD\PlanSheets\CROSS SECTIONS.dwg
The design concepts and designs presented herein, on any medium, are not to be used in whole or part for any other project without the written authorization of Kimley-Horn and Associates, Inc. It is understood that the use or reliance on this document without written authorization and adaptation by Kimley-Horn and Associates, Inc. shall be without liability to Kimley-Horn and Associates, Inc.
document together with the concepts and designs presented herein, as an instrument of service, is intended only for the specific purpose and client for which it was prepared. Reuse of and improper reliance on this

STA: 6+50

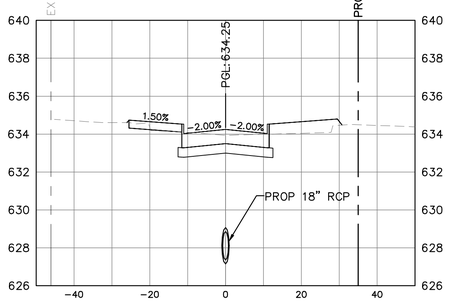

STA: 8+00

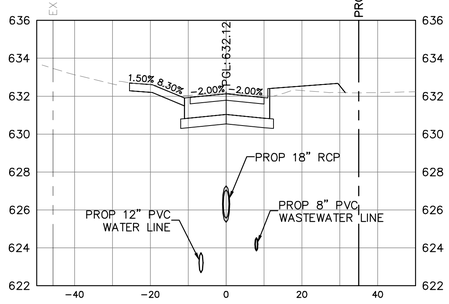

STA: 9+50

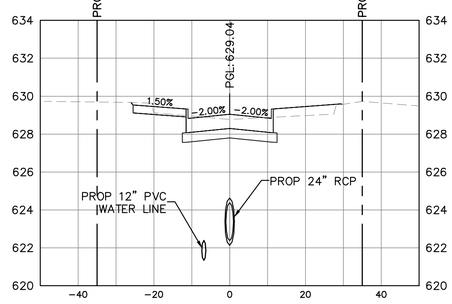

STA: 6+00

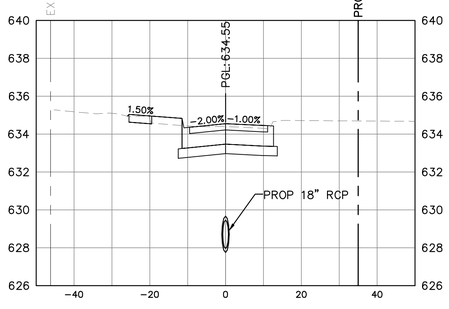

STA: 7+50

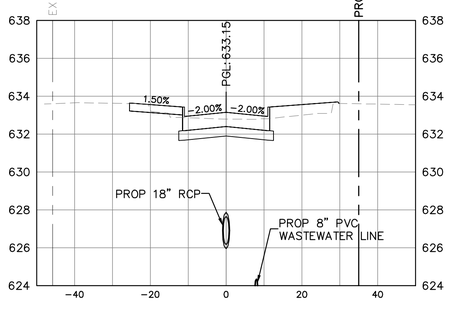

STA: 9+00

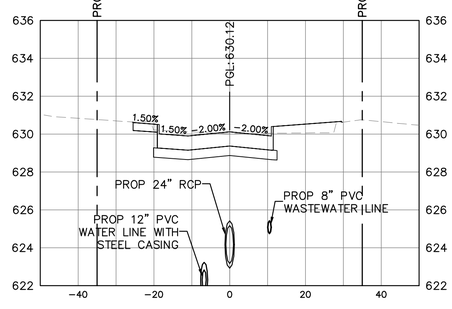

STA: 5+66

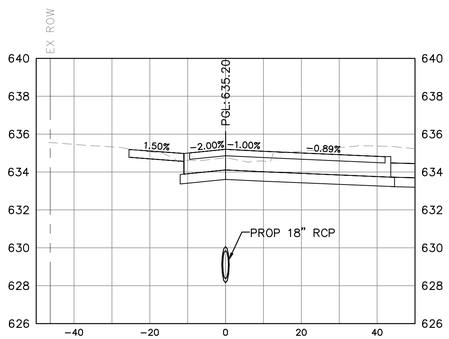

STA: 7+00

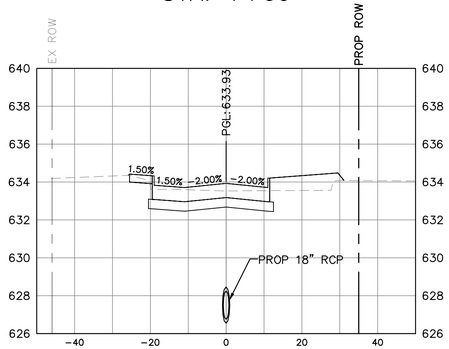

STA: 8+50

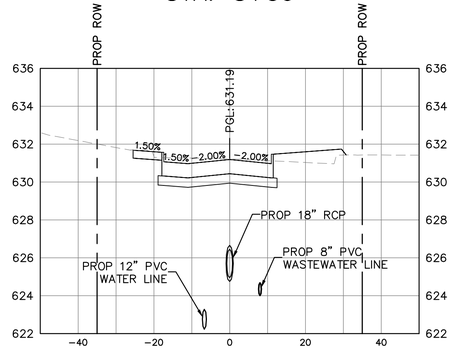

℄ – CENTERLINE
EX – EXISTING
PROP – PROPOSED

ROW – RIGHT OF WAY
PGL – PROFILE GRADE LINE
DE – DRAINAGE EASEMENT

WE – WATER EASEMENT
ELEC –ELECTRIC EASEMENT
BNSF – BNSF RIGHT OF WAY

TCE – TEMPORARY CONSTRUCTION EASEMENT

EXISTING GRADE
PROPOSED GRADE

SCALE:
11" X 17" - H: 1" = 40' V: 1" = 20'

No.	REVISIONS	DATE	BY

PROJECT NO. C000057/ BID NO. 27-31

Kimley»Horn
225 E. JOHN W. CARPENTER FREEWAY SUITE 1100
IRVING, TX 75062
PHONE: 214-369-6500
WWW.KIMLEY-HORN.COM
© 2026 KIMLEY-HORN AND ASSOCIATES, INC.
TEXAS REGISTERED ENGINEERING FIRM #F-928

11/06/2026



KHA PROJECT	063543066
DATE	11/06/2026
SCALE	AS SHOWN
DESIGNED BY	KCH
DRAWN BY	ZMZ
CHECKED BY	FLS

ADDISON
ADDISON JUNCTION
PUBLIC
INFRASTRUCTURE
IMPROVEMENTS

CROSS SECTIONS
FESTIVAL WAY
STA 5+66 TO STA 9+50

SHEET NUMBER
113

Plotted By: Mercado, Joseph November 06, 2026 01:36:37pm C:\ACCDocs\Vintage Hills\03543066-ADDISON JUNCTION PUBLIC\Project Files\CAD\Plan Sheets\CROSS SECTIONS.dwg
This electronic file is made available subject to the recipient's acknowledgment that such file(s) are provided as an accommodation to the recipient and agrees that any reliance on this document without written authorization and adaptation by Kimley-Horn and Associates, Inc. shall be without liability to Kimley-Horn and Associates, Inc. Kimley-Horn and Associates, Inc. makes no warranties, express or implied, as to the accuracy of the data contained herein. The data was prepared solely for the purposes of preparing the construction plans for which it was prepared. Reliance on this data for any other purpose or on any other project is at the sole risk of the user. The user agrees to indemnify and hold harmless Kimley-Horn and Associates, Inc. from any and all claims, damages, losses, and expenses arising out of or resulting therefrom. The data is intended only for the specific purpose and project for which it was prepared and is not to be used for any other purpose or project. Any changes made to these electronic files are not to be represented as being the work of Kimley-Horn and Associates, Inc. The recipient is responsible for the maintenance of these files and agrees that Kimley-Horn and Associates, Inc. shall not be responsible for any unauthorized changes made to these files after their acceptance. The recipient shall not transfer these files to anyone else without prior written consent from Kimley-Horn and Associates, Inc. The recipient shall not remove this boilerplate from these files.

STA: 11+00

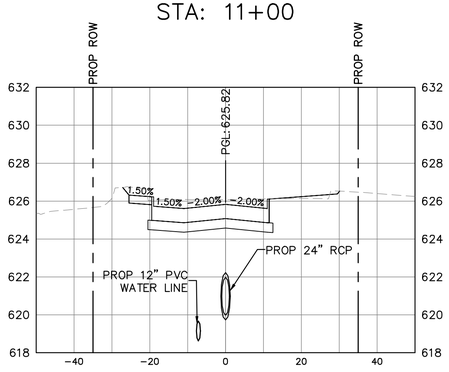

STA: 12+50

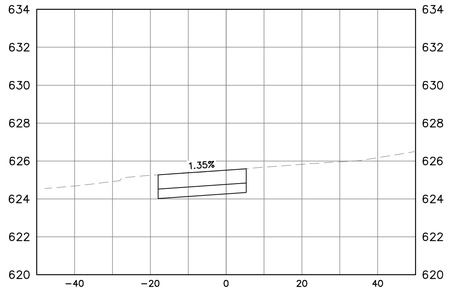

STA: 10+50

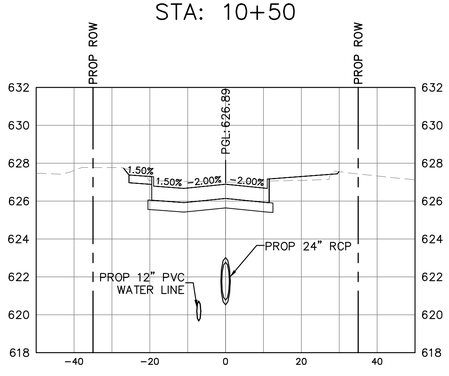

STA: 12+00

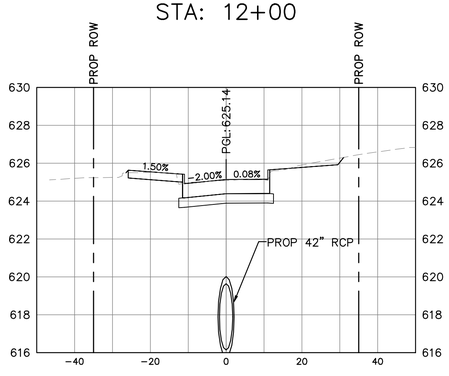

STA: 10+00

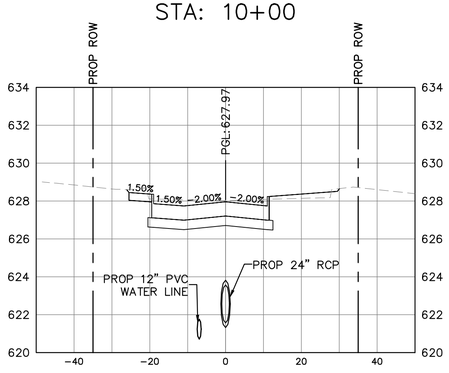

STA: 11+50

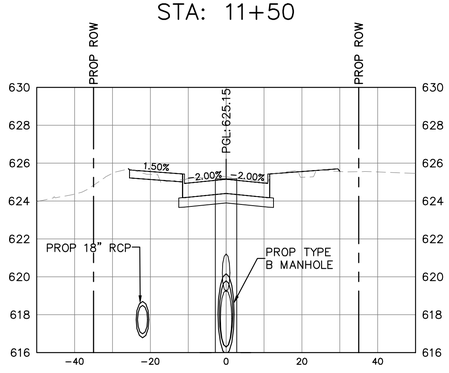

℄ – CENTERLINE
EX – EXISTING
PROP – PROPOSED

ROW – RIGHT OF WAY
PGL – PROFILE GRADE LINE
DE – DRAINAGE EASEMENT

WE – WATER EASEMENT
ELEC –ELECTRIC EASEMENT
BNSF – BNSF RIGHT OF WAY

TCE – TEMPORARY CONSTRUCTION EASEMENT

EXISTING GRADE
PROPOSED GRADE

SCALE:
11" X 17" - H: 1" = 40' V: 1" = 20'

No.	REVISIONS	DATE	BY

PROJECT NO. C000057/ BID NO. 27-31

Kimley»Horn
225 E. JOHN W. CARPENTER FREEWAY SUITE 1100
IRVING, TX 75062
PHONE: 214.369.6500
WWW.KIMLEY-HORN.COM
© 2026 KIMLEY-HORN AND ASSOCIATES, INC.
TEXAS REGISTERED ENGINEERING FIRM #F-928

11/06/2026



KHA PROJECT	063543066
DATE	11/06/2026
SCALE	AS SHOWN
DESIGNED BY	KCH
DRAWN BY	ZMZ
CHECKED BY	FLS

ADDISON
ADDISON JUNCTION PUBLIC INFRASTRUCTURE IMPROVEMENTS

CROSS SECTIONS
FESTIVAL WAY
STA 10+00 TO 12+50

SHEET NUMBER
114

Plotted By: ZmetL, Zach November 09, 2026 08:09:03pm C:\ACV\ACV2Cnx\Work in Horn\083543066-400ROW JUNCTION PUBLIC\Project Files\CAD\PlanSheet\CROSS SECTIONS.dwg
This document, together with the concepts and designs presented herein, as an instrument of service, is intended only for the specific purpose and client for which it was prepared. Reuse of and improper reliance on this document without written authorization and adaptation by Kimley-Horn and Associates, Inc. shall be without liability to Kimley-Horn and Associates, Inc.

STA: 101+50

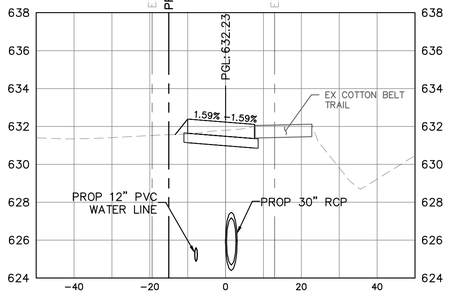

STA: 103+00

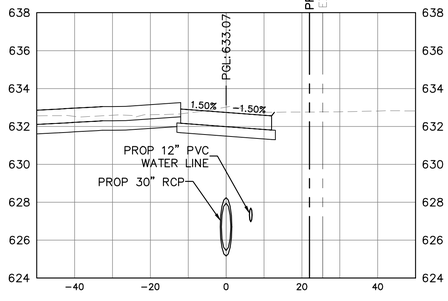

STA: 104+50

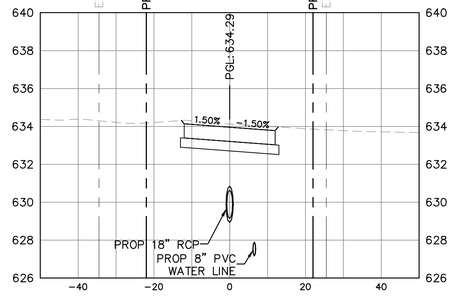

STA: 101+00

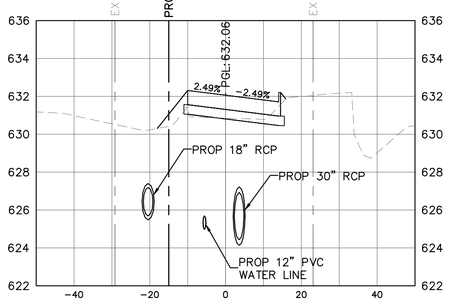

STA: 102+50

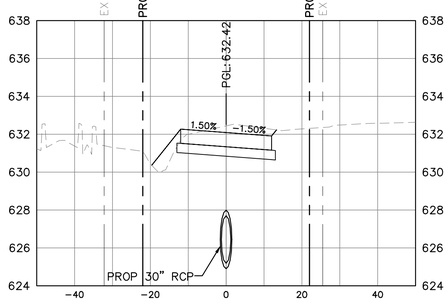

STA: 104+00

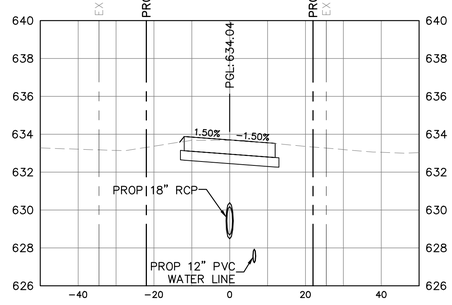

STA: 100+50

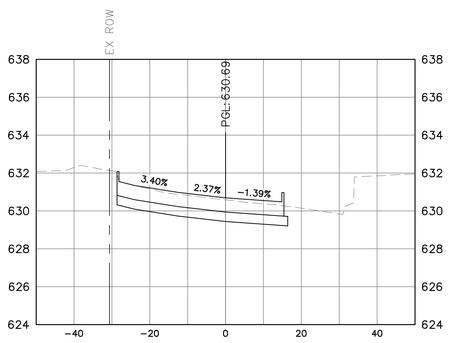

STA: 102+00

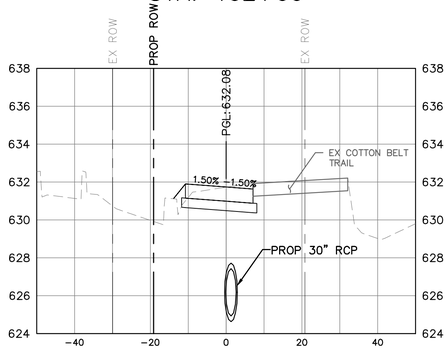

STA: 103+50

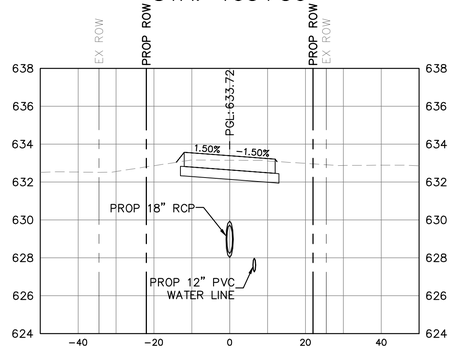

℄ – CENTERLINE
EX – EXISTING
PROP – PROPOSED

ROW – RIGHT OF WAY
PGL – PROFILE GRADE LINE
DE – DRAINAGE EASEMENT

WE – WATER EASEMENT
ELEC –ELECTRIC EASEMENT
BNSF – BNSF RIGHT OF WAY

TCE – TEMPORARY CONSTRUCTION EASEMENT

EXISTING GRADE
PROPOSED GRADE

SCALE:
11" X 17" - H: 1" = 40' V: 1" = 20'

No.	REVISIONS	DATE	BY

PROJECT NO. C00057/ BID NO. 27-31

Kimley»Horn
225 E. JOHN W. CARPENTER FREEWAY SUITE 1100
IRVING, TX 75062
PHONE: 214.369.6500
WWW.KIMLEY-HORN.COM
© 2026 KIMLEY-HORN AND ASSOCIATES, INC.
TEXAS REGISTERED ENGINEERING FIRM #F-928

11/06/2026



KHA PROJECT			
063543066			
DATE	11/06/2026		
SCALE	AS SHOWN	DESIGNED BY	KCH
		DRAWN BY	ZMZ
		CHECKED BY	FLS

ADDISON
ADDISON JUNCTION
PUBLIC
INFRASTRUCTURE
IMPROVEMENTS

CROSS SECTIONS
JULIAN AVENUE
STA 100+50 TO STA 104+50

SHEET NUMBER
115

Plotted By:Moreno, Joseph November 06, 2026 01:36:42pm C:\ACC\ACCDocs\Kimley-Horn\063543066-ADDISON JUNCTION PUBLIC\Project Files\CADD\PlanSheets\CROSS SECTIONS.dwg
This document, together with the concepts and designs presented herein, as an instrument of service, is intended only for the specific purpose and client for which it was prepared. Reuse of and improper reliance on this document without written authorization and adaptation by Kimley-Horn and Associates, Inc. shall be without liability to Kimley-Horn and Associates, Inc.

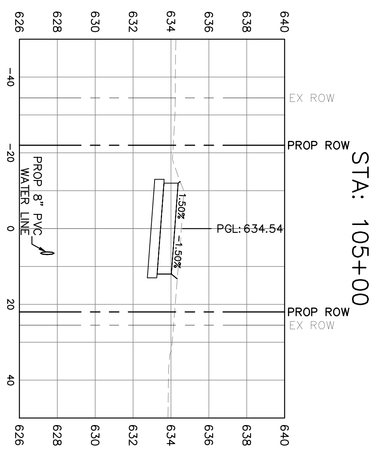

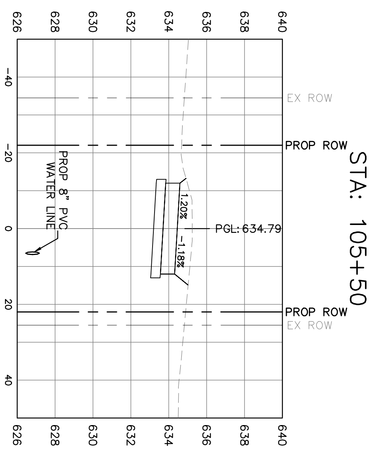

℄ – CENTERLINE
EX – EXISTING
PROP – PROPOSED

ROW – RIGHT OF WAY
PGL – PROFILE GRADE LINE
DE – DRAINAGE EASEMENT

WE – WATER EASEMENT
ELEC –ELECTRIC EASEMENT
BNSF – BNSF RIGHT OF WAY

TCE – TEMPORARY CONSTRUCTION EASEMENT

– – – – EXISTING GRADE
——— PROPOSED GRADE

SCALE:
11" X 17" - H: 1" = 40' V: 1" = 20'

SHEET NUMBER
116

CROSS SECTIONS
JULIAN AVENUE
STA 105+00 TO STA 105+50

ADDISON
ADDISON JUNCTION PUBLIC INFRASTRUCTURE IMPROVEMENTS

KHA PROJECT	063543066
DATE	11/06/2026
SCALE	AS SHOWN
DESIGNED BY	KCH
DRAWN BY	ZMZ
CHECKED BY	FLS

LICENSED PROFESSIONAL ENGINEER NATHAN ANTHONY HAMILTON 135665 STATE OF TEXAS
11/06/2026

Kimley»Horn
225 E.JOHN W. CARPENTER FREEWAY SUITE 1100
IRVING, TX 75063
PHONE: 214-420-5600
WWW.KIMLEY-HORN.COM
© 2026 KIMLEY-HORN AND ASSOCIATES, INC.
TEXAS REGISTERED ENGINEERING FIRM #F-928

No.	REVISIONS	DATE	BY

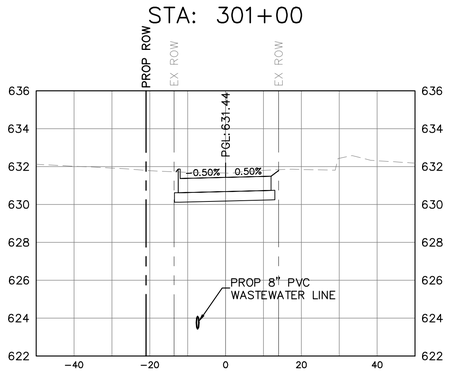

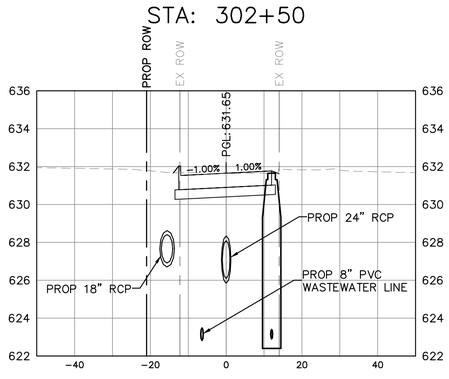

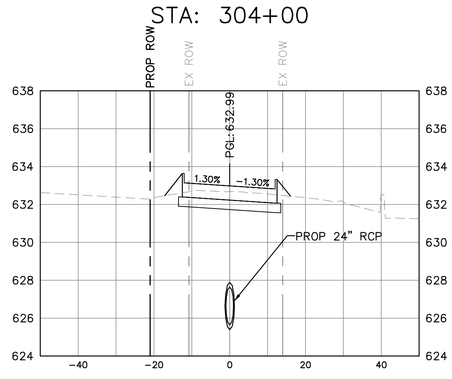

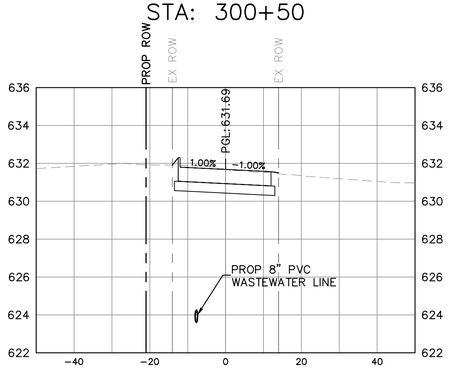

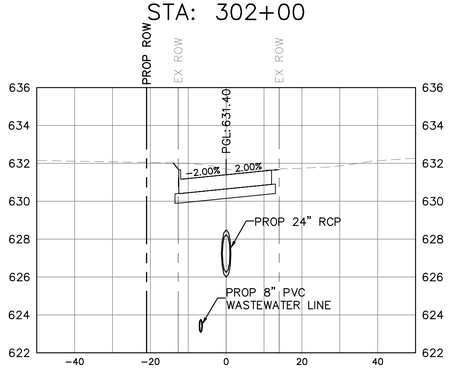

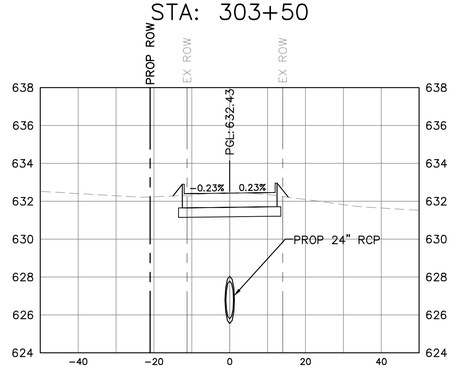

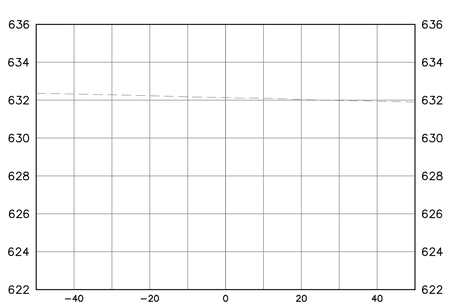

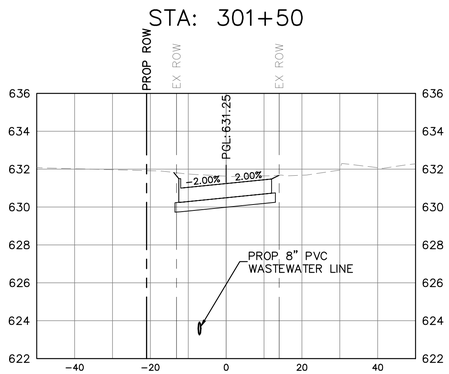

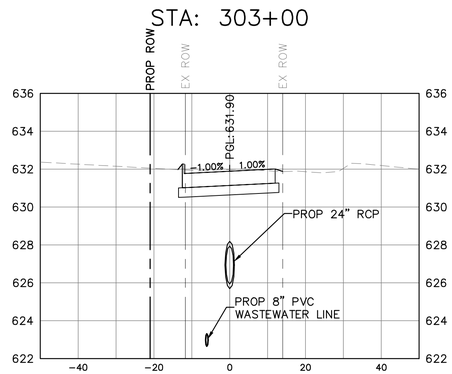

℄ – CENTERLINE
EX – EXISTING
PROP – PROPOSED

ROW – RIGHT OF WAY
PGL – PROFILE GRADE LINE
DE – DRAINAGE EASEMENT

WE – WATER EASEMENT
ELEC –ELECTRIC EASEMENT
BNSF – BNSF RIGHT OF WAY

TCE – TEMPORARY CONSTRUCTION EASEMENT

EXISTING GRADE
PROPOSED GRADE

SCALE:
11" X 17" - H: 1" = 40' V: 1" = 20'

No.	REVISIONS	DATE	BY

PROJECT NO. C00057/ BID NO. 27-31

Kimley»Horn
225 E. JOHN W. CARPENTER FREEWAY SUITE 1100
IRVING, TX 75062
PHONE: 214-565-0660
WWW.KIMLEY-HORN.COM
© 2026 KIMLEY-HORN AND ASSOCIATES, INC.
TEXAS REGISTERED ENGINEERING FIRM #F-928

11/06/2026

STATE OF TEXAS
L. NATHAN ANTE
96866
LICENSED
PROFESSIONAL ENGINEER
L. Nathan Ante

KHA PROJECT 063543066	DATE 11/06/2026	SCALE AS SHOWN	DESIGNED BY KCH	DRAWN BY ZMZ	CHECKED BY FLS

ADDISON
ADDISON JUNCTION
PUBLIC
INFRASTRUCTURE
IMPROVEMENTS

CROSS SECTIONS
ACE ALLEY
STA 300+00 TO STA 304+00

SHEET NUMBER
117

Plotted By: Hill, Keegan November 06, 2026 08:58:45am C:\AC\ACADfiles\Kimley-Horn\063543066-ADDISON JUNCTION PUBLIC\Project Files\CADD\Plan Sheets\XS\CROSS SECTIONS.dwg
This document, together with the concepts and designs presented herein, is intended only for the specific purpose and client for which it was prepared. Reuse of and improper reliance on this document without written authorization and adaptation by Kimley-Horn and Associates, Inc. shall be without liability to Kimley-Horn and Associates, Inc.